Keysight Technologies
N9030B PXA Signal Analyzer

KEYSIGHT

SERVICE GUIDE

Notices

© Keysight Technologies, Inc. 2016- 2026

No part of this manual may be reproduced in any form or by any means (including electronic storage and retrieval or translation into a foreign language) without prior agreement and written consent from Keysight Technologies, Inc. as governed by United States and international copyright laws.

Trademark Acknowledgments

n/a

Manual Part Number

N9030-90071

Edition

Edition 1, July 2026
Supersedes: April 2025

Published by:
Keysight Technologies
1400 Fountaingrove Parkway
Santa Rosa, CA 95403

Warranty

THE MATERIAL CONTAINED IN THIS DOCUMENT IS PROVIDED "AS IS," AND IS SUBJECT TO BEING CHANGED, WITHOUT NOTICE, IN FUTURE EDITIONS. FURTHER, TO THE MAXIMUM EXTENT PERMITTED BY APPLICABLE LAW, KEYSIGHT DISCLAIMS ALL WARRANTIES, EITHER EXPRESS OR IMPLIED WITH REGARD TO THIS MANUAL AND ANY INFORMATION CONTAINED HEREIN, INCLUDING BUT NOT LIMITED TO THE IMPLIED WARRANTIES OF MERCHANTABILITY AND FITNESS FOR A PARTICULAR PURPOSE. KEYSIGHT SHALL NOT BE LIABLE FOR ERRORS OR FOR INCIDENTAL OR CONSEQUENTIAL DAMAGES IN CONNECTION WITH THE FURNISHING, USE, OR PERFORMANCE OF THIS DOCUMENT OR ANY INFORMATION CONTAINED HEREIN. SHOULD KEYSIGHT AND THE USER HAVE A SEPARATE WRITTEN AGREEMENT WITH WARRANTY TERMS COVERING THE MATERIAL IN THIS DOCUMENT THAT CONFLICT WITH THESE TERMS, THE WARRANTY TERMS IN THE SEPARATE AGREEMENT WILL CONTROL.

Technology Licenses

The hardware and/or software described in this document are furnished under a license and may be used or copied only in accordance with the terms of such license.

U.S. Government Rights

The Software is "commercial computer software," as defined by Federal Acquisition Regulation ("FAR") 2.101. Pursuant to FAR 12.212 and 27.405-3 and Department of Defense FAR Supplement ("DFARS") 227.7202, the U.S. government acquires commercial computer software under the same terms by which the software is customarily provided to the public. Accordingly, Keysight provides the Software to U.S. government customers under its standard commercial license, which is embodied in its End User License Agreement (EULA), a copy of which can be found at http://www.keysight.com/find/sweula. The license set forth in the EULA represents the exclusive authority by which the U.S. government may use, modify, distribute, or disclose the Software. The EULA and the license set forth therein, does not require or permit, among other things, that Keysight: (1) Furnish technical information related to commercial computer software or commercial computer software documentation that is not customarily provided to the public; or (2) Relinquish to, or otherwise provide, the government rights in excess of these rights customarily provided to the public to use, modify, reproduce, release, perform, display, or disclose commercial computer software or commercial computer software documentation. No additional government requirements beyond those set forth in the EULA shall apply, except to the extent that those terms, rights, or licenses are explicitly required from all providers of commercial computer software pursuant to the FAR and the DFARS and are set forth specifically in writing elsewhere in the EULA. Keysight shall be under no obligation to update, revise or otherwise modify the Software. With respect to any technical data as defined by FAR 2.101, pursuant to FAR 12.211 and 27.404.2 and DFARS 227.7102, the U.S. government acquires no greater than Limited Rights as defined in FAR 27.401 or DFAR 227.7103-5 (c), as applicable in any technical data.

Safety Notices

CAUTION

A **CAUTION** notice denotes a hazard. It calls attention to an operating procedure, practice, or the like that, if not correctly performed or adhered to, could result in damage to the product or loss of important data. Do not proceed beyond a CAUTION notice until the indicated conditions are fully understood and met.

WARNING

A **WARNING** notice denotes a hazard. It calls attention to an operating procedure, practice, or the like that, if not correctly performed or adhered to, could result in personal injury or death. Do not proceed beyond a WARNING notice until the indicated conditions are fully understood and met.

Where to Find the Latest Information

Documentation is updated periodically. For the latest information about this instrument, including firmware updates, application information, and product information, click the website link below.

https://www.keysight.com/find/pxa

Information on preventing analyzer damage can be found at:

https://www.keysight.com/find/PreventingInstrumentDamage

Is your product software up-to-date?

Periodically, Keysight releases software updates to fix known defects and incorporate product enhancements. To search for software updates for your product, go to the Keysight Technical Support website at:

https://www.keysight.com/find/techsupport

Product and Solution Cybersecurity

Keysight complies with multinational regulations for the cybersecurity of its own products and is committed to providing information to assist you in protecting your products and solutions from external cyber threats. For more information, see:

https://www.keysight.com/us/en/about/quality-and-security/security/product-and-solution-cyber-security.html

Keysight also recommends that you secure your IT environments using appropriate third-party tools. For instruments that run the Microsoft Windows operating system, Keysight concurs with Microsoft's recommendations for ensuring that the instrument is protected:

- Get the latest critical Windows updates

- For network-connected instruments, use an Internet firewall (in Keysight instruments, Windows Firewall is enabled by default)

- For network-connected instruments, use up-to-date antivirus and anti-spyware software

Responsible Disclosure Program

Keysight recommends that security researchers share the details of any suspected vulnerabilities across any asset owned, controlled, or operated by Keysight (or that would reasonably impact the security of Keysight and our users) using this form:

https://www.keysight.com/us/en/contact/responsible-disclosure-program.html

Report a Product Cybersecurity Issue

If you discover a cybersecurity issue that you suspect may involve Keysight's proprietary software, or third-party software supplied by Keysight as part of a product, or that may affect the operation of Keysight products, we encourage you to report it to us using this form:

https://www.keysight.com/us/en/about/quality-and-security/security/product-and-solution-cyber-security/report-a-product-cybersecurity-issue

Table of Contents

1. Overview

What You Will Find in This Chapter . . . 15
Keysight PXA Signal Analyzer Overview . . . 16
Virus Information . . . 16
Instrument Option Descriptions . . . 17
Before You Start Troubleshooting . . . 19
ESD Information . . . 21
Protection from Electrostatic Discharge . . . 21
Handling of Electronic Components and ESD . . . 22
Test Equipment Usage and ESD . . . 22
Static Safe Accessories . . . 22
For Additional Information about ESD . . . 22
Instrument Maintenance . . . 23
Cleaning the Instrument . . . 23
Cleaning Connectors . . . 23
Lithium Battery Information . . . 24
Service Equipment You Will Need . . . 25
Tools you will need . . . 25
Calibration Application Software . . . 25
Front End Controller Troubleshooting Kit . . . 26
USB Keyboard and Mouse . . . 27
USB Storage Device . . . 27
After an Instrument Repair . . . 28
Contacting Keysight Technologies . . . 29
Instrument Serial Numbers . . . 30
How to Return Your Instrument for Service . . . 31
Service Order Number . . . 31
Original Packaging . . . 31
Other Packaging . . . 31

2. Boot Up and Initialization

What You Will Find in This Chapter . . . 33
Check the Basics . . . 34
Instrument Boot Up Process . . . 35
Typical instrument boot-up process flow . . . 36
Potential Problems During Boot Process . . . 39
Instrument Does Not Turn On . . . 39
Front Panel Power Switch Is Not Working . . . 41
Yellow Standby LED Does Not Turn On . . . 42
Green Power On LED Does Not Turn On . . . 45
Fan(s) Are Not Operating . . . 46
No Keysight Splash Screen Displayed . . . 50
Instrument Hangs at the Keysight Splash Screen . . . 52

Instrument Cannot Completely Load or Run the Operating System . . . 52
Troubleshooting a Blank Display . . . 53
Display Backlight Is Not Working . . . 54
Initializations Did Not Complete . . . 58
Fails an Internal Auto Alignment . . . 58
Signal Level Verification . . . 59
Signal Level Problem with Input Frequencies < 3.6 GHz . . . 59
Signal Level Problem with Input Frequencies > 3.6 GHz . . . 60

3. Instrument Information and Calibration Data
What You Will Find in This Chapter . . . 61
Instrument Model Number . . . 62
Instrument Serial Number . . . 63
Instrument Licenses . . . 64
License Installation . . . 65
Instrument Calibration Database . . . 66
Alignment Data Wizard . . . 66

4. Internal Alignments
What You Will Find in This Chapter . . . 71
Internal Alignments Overview . . . 72
When an Alignment Fails . . . 73
Multiple Alignment Failures . . . 74
Alignment Descriptions . . . 75

5. First-Look Troubleshooting
What You Will Find in This Chapter . . . 87
Overview . . . 88
Front Panel Troubleshooting . . . 89
Overview . . . 89
Initial Configuration Check . . . 90
Mechanical Attenuator Evaluation . . . 95
A12 Yig Tuned Filter Shape Verification . . . 98
µWave Path Functionality . . . 100
Preamplifier Functionality . . . 103
IF Signal Path Isolation . . . 106
IF Flatness Verification . . . 108
Power Supply Verification . . . 115

6. RF Input Section (RF/Microwave)
What You Will Find in This Chapter . . . 119
RF Section Description . . . 121
Signal Path Overview . . . 121
A9 Input Attenuator A . . . 124
A10 Input Attenuator B . . . 124

A11 Low Band Switch . . . 125
A12 YTF Preselector . . . 125
A20 YTO . . . 125
A13 RF Front End Assembly . . . 126
A15 Front End Controller. . . . 127
SW3 Low Noise Path Switch (Option LNP). . . . 128
SW1 and SW2 Microwave Preselector Bypass Switches (Option MPB) . . . 128
Troubleshooting . . . 129
Quick Check to Verify the Low Band Signal Path. . . . 129
Troubleshooting a Low Band Problem . . . 132
Quick Check to Verify High Band RF Path . . . 140
Troubleshooting a High Band Problem . . . 143

7. RF Input Section (Millimeter-Wave)

What You Will Find in This Chapter . . . 151
RF Section Description . . . 153
Signal Path Overview . . . 153
A9 Input Attenuator A . . . 156
A10 Input Attenuator B . . . 156
A11 Low Band Switch . . . 156
A12 YTF Preselector . . . 157
A20 YTO . . . 157
A13 RF Front End Assembly . . . 157
A15 Front End Control Assembly . . . 160
SW3 Low Noise Path Switch (Option LNP). . . . 160
SW4 Microwave Preselector Bypass Switch (Option MPB) . . . 160
Troubleshooting . . . 161
Quick Check to Verify the Low Band Signal Path. . . . 161
Troubleshooting a Low Band Problem . . . 164
Quick Check to Verify High Band RF Path . . . 172
Troubleshooting a High Band Problem . . . 175

8. Front End Controller

What You Will Find in This Chapter . . . 183
A15 Front End Controller Description. . . . 184
Purpose . . . 184
A15 Front End Controller Troubleshooting . . . 188
Verifying Input Attenuator A, Input Attenuator B, Low Band Switch Logic and Power Supplies . . . 189
Verifying A12 YTF Preselector Tune Output . . . 198
Verifying SW3 Low Noise Path Switch (Option LNP) . . . 200
Verifying SW1, SW2, or SW4 Microwave Preselector Bypass Switch (Option MPB). . . . 201
Verifying Narrowband IF Out (A15J900). . . . 205
Verifying Wideband IF Out (A15J901, Option B40, B85, B1X, B2X, B5X only) . . . 205
Verifying Aux IF Out, Rear Panel (Option CR3, CRP, ALV only) . . . 206
Standard PXA . . . 206
Verifying 2nd IF Output (Option CR3). . . . 206

Verifying Arbitrary IF Output (Option CRP) . . . 208
Verifying Auxiliary Log Video Output (Option ALV) . . . 209

9. Analog/Digital IF

What You Will Find in This Chapter . . . 211
A2 Analog IF Assembly Description . . . 212
A2 Analog IF Assembly Theory of Operation . . . 213
A2 Analog IF Troubleshooting . . . 216
Verifying the 322.5 MHz Input Power . . . 216
Verifying the 22.5 MHz Output Power . . . 219
Verifying the 300 MHz LO Input Power from the A16 Reference Assembly . . . 221
A3 Digital IF Assembly Description . . . 223
A3 Digital IF Assembly Theory of Operation . . . 224
A3 Digital IF Troubleshooting . . . 226
Verifying the 22.5 MHz Input Power . . . 226
Verifying the 250 MHz IF Input Power (Option B40 only) . . . 228
Verifying the 100 MHz Reference Input . . . 231

10. LO Synthesizer/Reference

What You Will Find in This Chapter . . . 233
A14 LO Synthesizer
Option EP1, Enhanced Phase Noise Performance . . . 235
A14 LO Synthesizer (EP1) Description . . . 235
A14 LO Synthesizer (EP1) Theory of Operation . . . 236
A14 LO Synthesizer (EP1) Troubleshooting . . . 239
A14 DDS LO Synthesizer
Option EP0, Enhanced Phase Noise, DDS LO . . . 251
A14 DDS LO Synthesizer (EP0) Description . . . 251
A14 DDS LO Synthesizer (EP0) Troubleshooting . . . 254
Verifying the 7.2 GHz DDS Clock Reference Power and Frequency . . . 258
Verifying the 1st LO Power and Frequency . . . 259
A16 Reference Description . . . 264
Purpose . . . 264
A16 Reference Troubleshooting . . . 267
Reference Signal Verification . . . 267
Option EP1 Status LED Verification . . . 274
Option EP0 Status LED Verification . . . 276

11. CPU/Disk Drive

What You Will Find in This Chapter . . . 279
A4 CPU Description . . . 280
Disk Drive . . . 280
Front Panel Interface . . . 280
Graphics Controller . . . 280
Power Supply Control . . . 280
Rear Panel Connectivity . . . 281

System Memory . . . 281
System Processor . . . 281
CPU Battery . . . 281
A4 Processor Board Assembly Troubleshooting . . . 282
Boot-Up or Initialization Problems . . . 282
Remote Monitor Troubleshooting . . . 282
BIOS Settings . . . 283
A5 Disk Drive . . . 294
Overview . . . 295
Troubleshooting software related issues . . . 296
Reloading the X-Series Software . . . 297
Instrument Image Recovery Process . . . 298
Replacing the instrument disk drive . . . 300

12. Power Supply/Midplane
What You Will Find in This Chapter . . . 301
A6 Power Supply Description . . . 302
Purpose . . . 302
Power Supply Theory of Operation . . . 303
A6 Power Supply Assembly Troubleshooting . . . 306
Supply Voltages . . . 306
Control Inputs . . . 307
Status Outputs . . . 307
A7 Midplane Assembly Description . . . 309
Midplane Board Connections . . . 310
A7 Midplane Assembly Troubleshooting . . . 312
Instrument Power Supply LEDs and Test Points . . . 312
Additional Power Supply Regulation . . . 312
Instrument Secure Storage . . . 312
Power Supply Dithering . . . 312

13. Front Panel/Motherboard
What You Will Find in This Chapter . . . 317
A8 Motherboard Description . . . 318
Purpose . . . 318
A8 Motherboard Troubleshooting . . . 320
A1 Front Panel Assembly . . . 321
A1A2 Front Panel Interface Board . . . 321
A1A3 LCD . . . 321
A1A4 LCD Inverter Board/DC-DC Converter . . . 321
A1A5 Front Panel USB Interface Board . . . 321

14. Hardware Options
What You Will Find in This Chapter . . . 323
A25 Wideband Analog IF Troubleshooting - Option B1X and B85 . . . 326
A25 Wideband Analog IF Assembly Description - Option B1X and B85 . . . 326

A25 Wideband Analog IF Assembly Theory of Operation - Option B1X and B85 . . . 326
A25 Wideband Troubleshooting - Option B1X and B85. . . . 328
A26 Wideband Digital IF Troubleshooting - Option B1X and B85 . . . 330
Verify the Wideband Signal Path . . . 330
A25 Wideband Analog IF Troubleshooting - Option B2X and B5X . . . 331
A25 Wideband Analog IF Assembly Description - Option B2X and B5X. . . . 331
A25 Wideband Analog IF Assembly Theory of Operation - Option B2X and B5X . . . 333
A25 Wideband Analog IF Assembly Troubleshooting - Option B2X and B5X . . . 334
A26 and A27 Wideband Digital IF Troubleshooting - Option B2X and B5X . . . 338
Verify the Wideband Signal Path . . . 338
Option BBA Analog I/Q Baseband Inputs Description. . . . 339
A17 LED Board . . . 339
A18 BBIQ Interface Board . . . 339
A19 BBIQ Main Board . . . 340
Option RTS, Streaming . . . 341
Description . . . 341
Signal Analyzer Hardware Requirements . . . 341
Software Requirements. . . . 341
Functionality Check. . . . 342

15. Block Diagrams
What You Will Find in This Chapter . . . 343
Block Diagrams. . . . 344
DDS LO Synthesizer Option EPO Block Diagram . . . 356
Analog IF Block Diagram . . . 357
Wideband Analog IF Option B1X or B85 Block Diagram . . . 358
Wideband Analog IF Option B2X and B5X Block Diagram . . . 359
Digital IF Block Diagram . . . 360
Computer Block Diagram . . . 361

16. Service and Diagnostics Menus
Overview . . . 363
Controlling Access . . . 363
Secure service access . . . 364
Menus . . . 365
Service Key Descriptions . . . 370
Timebase . . . 370
Corrections . . . 371
Band Lock . . . 373
LO Band Lock . . . 374
Low Noise Path . . . 375
LO Control . . . 375
Align. . . . 376

17. Replaceable Parts
What You Will Find in This Chapter . . . 381

How to Order Parts . . . 383
Replaceable Parts . . . 384
Hardware . . . 401

18. Assembly Replacement Procedures
What You Will Find in This Chapter . . . 435
Before Starting . . . 436
Safety . . . 436
Tools you will need . . . 437
Adjustments Tests after an instrument repair . . . 437
Major Assembly Locations . . . 438
Instrument Outer Case . . . 439
Removal . . . 439
Replacement . . . 440
Top Brace and Power Supply Bracket . . . 441
Removal . . . 441
Front Frame Assembly . . . 443
Removal . . . 443
Replacement . . . 444
Front Frame Assembly Components . . . 445
RF Area (Options 503, 508, 513, 526) . . . 455
Attenuators . . . 457
Low Band Switch . . . 460
YTF Preselector . . . 463
YTO . . . 467
SW1/SW2 Microwave Preselector Bypass and SW3 Low Noise Path Switches (Options MPB and LNP) . . . 469
RF Area (Options 544, 550) . . . 491
Attenuators . . . 493
Low Band Switch . . . 495
YTF Preselector . . . 499
YTO . . . 503
SW4 Microwave Preselector Bypass and SW3 Low Noise Path Switches (Options MPB and LNP) . . . 505
RF Front End Assembly . . . 513
Removal . . . 513
Replacement . . . 515
Front End Controller . . . 516
Removal . . . 516
Replacement . . . 517
LO Synthesizer Assembly . . . 518
Removal . . . 518
Replacement . . . 519
Reference Assembly . . . 520
Removal . . . 520
Replacement . . . 522
Option B1X . . . 524
Removal . . . 524

Replacement . . . 525
Option BBA . . . 526
Removal . . . 526
Replacement . . . 526
Midplane Board . . . 527
Removal . . . 527
Replacement . . . 528
Rear Panel . . . 529
Removal . . . 529
Replacement . . . 529
Power Supply Assembly . . . 530
Removal . . . 530
Replacement . . . 531
CPU Assembly . . . 532
Removal . . . 532
Replacement . . . 533
Disk Drive . . . 534
Drive Removal and Replacement . . . 534
Disk Drive Interconnect . . . 538
AIF/DIF Assembly . . . 540
Removal . . . 540
Separate AIF/DIF Assembly . . . 542
Replacement . . . 543
Wideband Extension Board (Option RTS) . . . 544
Removal . . . 544
Replacement . . . 546
Motherboard Assembly . . . 547
Removal . . . 547
Replacement . . . 550
Fan Assembly . . . 552
Removal . . . 552
Replacement . . . 555
Input Connector Assembly . . . 556
Removal . . . 556
Replacement . . . 557

19. Post-Repair Procedures

What You Will Find in This Chapter . . . 559
Before Starting . . . 559
Post-Repair Procedures . . . 560
Additional Tasks . . . 565

20. Functional Tests

Functional Test Versus Performance Verification . . . 579
Before Performing a Functional Test . . . 580

Test Equipment 581
Displayed Average Noise Level (DANL) 584
Procedure. 584
Frequency Readout Accuracy. 586
Procedure. 587
Second Harmonic Distortion (SHD) 588
Procedure. 589
Amplitude Accuracy at 50 MHz 591
Procedure. 592
Testing Preamp Option (P03, P08, P13, P26) 594
Frequency Response (Flatness) 595
Procedure. 596
Frequency Response (Flatness), Preamp On 599
Procedure. 600
Scale Fidelity. 604
Procedure. 605
BBIQ Input Frequency Response
(Option BBA only) 608
Procedure. 610

21. Instrument Software

What You Will Find in This Chapter 615
Instrument Software Overview 616
Software Licensing 616
Software Updates 617
Instrument Measurement Application Software 617
89600 VSA Software 617

Keysight Technologies
N9030B PXA Signal Analyzer

Service Guide

1 Overview

What You Will Find in This Chapter

This chapter provides overview information on your spectrum analyzer.

The following sections are found in this chapter:

Keysight PXA Signal Analyzer Overview on page 16

Instrument Option Descriptions on page 17

Before You Start Troubleshooting on page 19

ESD Information on page 21

Instrument Maintenance on page 23

Service Equipment You Will Need on page 25

After an Instrument Repair on page 28

Contacting Keysight Technologies on page 29

How to Return Your Instrument for Service on page 31

Keysight PXA Signal Analyzer Overview

The Keysight PXA signal analyzer measures and monitors complex RF and microwave signals. The analyzer integrates traditional spectrum measurements with advanced vector signal analysis to optimize speed, accuracy, and dynamic range. You will be able to manipulate various file types on your analyzer just like your personal computer. Having a Windows based instrument provides many benefits such as easier file management, built-in Windows based programs such as Internet Explorer, and much more.

The Keysight PXA signal analyzer is readily adaptable to meet changing measurement needs. Optional features, whether hardware or measurement application software, will enable the analyzer to be configured as a comprehensive analytical tool to test communications systems and components.

If customer requirements should change or expand, post sale upgrades can be purchased at any time. Most measurement application upgrades require a license key, which is obtained using the Keysight Software Licensing service. If the email delivery option is ordered, the entitlement certificate will be emailed to the user the same day and the license key can be generated and installed in the signal analyzer within minutes (the instrument software may require updating). Once the license key is entered into the analyzer, the new option is enabled and fully functional.

The service strategy for the PXA is assembly level repair, not component level.

Hardware upgrades may require installation of optional hardware, and often require readjustment and verification of the hardware option.

Virus Information

Keysight Technologies does not load anti-virus software into the signal analyzer. It is the customer’s responsibility to install anti-virus software.

Instrument Option Descriptions

The PXA signal analyzer has a variety of hardware and measurement application options. Several of these options are “standard” so they are automatically installed on all PXA analyzers. All options require license files to be present in instrument memory before the option can be used, or viewed on the Show System screen.

From the front panel, press **System**, **Show System** to view a list of all installed options.

A current list of all instrument options and retrofit requirements is available on the Keysight web site for the PXA signal analyzer.

https://www.keysight.com/find/pxa_upgrades

Table 1-1

Option	Description	Notes
107	Audio Input and Digitizer	Front panel connector
503	2 Hz to 3.6 GHz frequency range	
508	2 Hz to 8.4 GHz frequency range	
513	2 Hz to 13.6 GHz frequency range	
526	2 Hz to 26.5 GHz frequency range	
544	2 Hz to 44 GHz frequency range	
550	2 Hz to 50 GHz frequency range	
ALV	Auxiliary Log Video Output	Rear panel connector
B25	25 MHz analysis bandwidth	Standard
B40	40 MHz analysis bandwidth	
B85	85 MHz analysis bandwidth	
B1X	160 MHz analysis bandwidth	
B2X	255 MHz analysis bandwidth	Requires Options EP0 and MPB
B5X	510 MHz analysis bandwidth	Requires Options EP0 and MPB
BBA	I/Q Baseband Inputs, Analog	Front panel connector
C35	RF Input Connector, 3.5 mm	Requires Option 526
CNF	RF Input Connector, Type-N	Standard for Options 503, 508, 513, and 526
CR3	2nd IF Output	Rear panel connector
CRP	Arbitrary IF Output	Rear panel connector
DP2	Digital Processor 2 GB Capture Memory	Standard
DP4	Digital processor 4 GB Capture Memory	Included with Option B85, B1X, B2X or B5X; instruments with serial number prefixes >MY/SG/US5608 only
EA3	Electronic Attenuator	
EMC	Software only. Provides EMI detectors and BWs	
EP0	Enhanced Phase Noise, DDS LO	Requires Options LNP or MPB

Table 1-1

Option	Description	Notes
EP1	Enhanced Phase Noise Performance	Standard
EXM	External Mixing	Front panel connector
FBP	Full Bypass Path	Requires Options LNP, MPB, and B2X or B5X
FSA	Fine Step Attenuator	Standard
FS1	Fast Sweep Capability	Standard
FS2	Enhanced Fast Sweep Speed	Standard
H52	Frequency Range Extension to 52 GHz	Requires Option 550 and B2X or B5X; factory install only
LFE	Low Frequency Enabled	Standard
LNP	Low Noise Path	
MPB	Preselector Bypass	
NF2	Noise Floor Extension	Standard
NUL	IM Nulling	Standard
PFR	Precision Frequency Reference	Standard
P03	Preamp, 100 kHz to 3.6 GHz	
P08	Preamp, 100 kHz to 8.4 GHz	With Option 508, 513, 526, 544, or 550
P13	Preamp, 100 kHz to 13.6 GHz	With Option 513, 526, 544, or 550
P26	Preamp, 100 kHz to 26.5 GHz	With Option 526, 544, or 550
P44	Preamplifier, 44 GHz	With Option 544 only
P50	Preamplifier, 50 GHz	With Option 550 only
RTL	Real-Time Link	Standard
RTS	Real-Time I/Q Data Streaming	Requires Option B85 or B1X or B2X or B5X
SF1	Security Features, Exclude Launching Programs	
SF2	Security Features, Prohibit Saving Results	
SF3	Security Feature, Secure RAM Disk Boot	
YAV	Screen Video Output	Rear panel connector

Before You Start Troubleshooting

Before troubleshooting, complete the following tasks:

- Familiarize yourself with the safety symbols marked on the instrument and read the general safety considerations in the front of this guide.
- Read the ESD information below.
- Familiarize yourself with the troubleshooting information in Chapter 2, "Boot Up and Initialization.", and how it relates to information on troubleshooting the other assemblies.

WARNING These servicing instructions are for use by qualified personnel only. To avoid electrical shock, do not perform any servicing unless you are qualified to do so.

WARNING The opening of covers or removal of parts is likely to expose dangerous voltages. Disconnect the product from all voltage sources while it is being opened.

WARNING The power cord is connected to internal capacitors that may remain live for 5 seconds after disconnecting the plug from it's power supply.

WARNING The detachable power cord is the instrument disconnecting device. It disconnects the mains circuits from the mains supply before other parts of the instrument. The front panel switch is only a standby switch and is not a LINE switch (disconnecting device).

CAUTION Always position the instrument for easy access to the disconnecting device (detachable power cord).

WARNING To prevent electrical shock, disconnect the analyzer from mains before cleaning. Use a dry cloth or one slightly dampened with water to clean the external case parts. Do not attempt to clean internally.

WARNING This is a Safety Class 1 Product (provided with a protective earthing ground incorporated in the power cord). The mains plug shall only be inserted in a socket outlet provided with a protective earth contact. Any interruption of the protective conductor inside or outside of the product is likely to make the product dangerous. Intentional interruption is prohibited.

CAUTION Always use the three-prong ac power cord supplied with this product. Failure to ensure adequate earth grounding by not using this cord may cause product damage.

CAUTION This instrument has an autoranging line voltage input; be sure the supply voltage is within the specified range.

ESD Information

Protection from Electrostatic Discharge

Electrostatic discharge (ESD) can damage or destroy electronic components. All work on electronic assemblies should be performed at a static-safe workstation. Figure 1-1 shows an example of a static-safe workstation using two types of ESD protection:

- Conductive table-mat and wrist-strap combination.
- Conductive floor-mat and heel-strap combination.

Both types, when used together, provide a significant level of ESD protection. Of the two, only the table-mat and wrist-strap combination provides adequate ESD protection when used alone. To ensure user safety, the static-safe accessories must provide at least 1 megohm of isolation from ground.

WARNING **These techniques for a static-safe workstation should not be used when working on circuitry with a voltage potential greater than 500 volts.**

Figure 1-1 Example of a Static-Safe Workstation

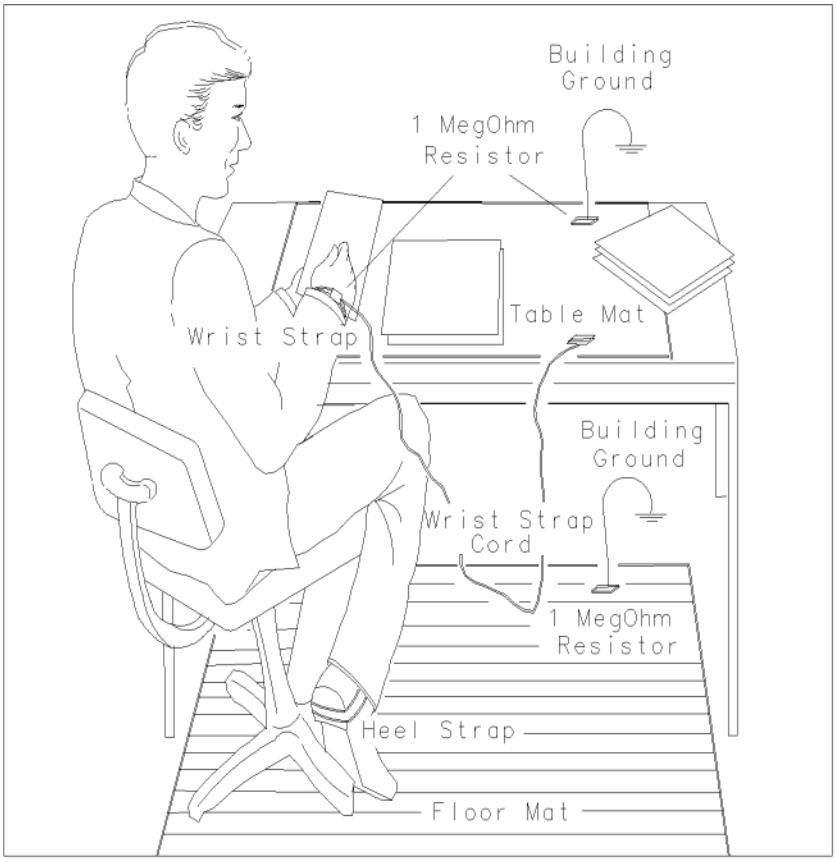

Handling of Electronic Components and ESD

The possibility of unseen damage caused by ESD is present whenever components are transported, stored, or used. The risk of ESD damage can be greatly reduced by paying close attention to how all components are handled.

- Perform work on all components at a static-safe workstation.
- Keep static-generating materials at least one meter away from all components.
- Store or transport components in static-shielding containers.

CAUTION **Always handle printed circuit board assemblies by the edges. This will reduce the possibility of ESD damage to components and prevent contamination of exposed plating.**

Test Equipment Usage and ESD

- Before connecting any coaxial cable to an analyzer connector, momentarily short the center and outer conductors of the cable together.
- Personnel should be grounded with a 1 megohm resistor-isolated wrist-strap before touching the center pin of any connector and before removing any assembly from the analyzer.
- Be sure that all analyzers are properly earth-grounded to prevent build-up of static charge.

Static Safe Accessories

9300-1367	Wrist-strap, color black, stainless steel. Four adjustable links and a 7 mm post-type connection.
9300-0980	Wrist-strap cord 1.5 m (5 ft.)
9300-0797	2 ft by 4 ft conductive mat with 15 ft grounding wire

For Additional Information about ESD

For more information about preventing ESD damage, contact the Electrical Over Stress/Electrostatic Discharge (EOS/ESD) Association, Inc. The ESD standards developed by this agency are sanctioned by the American National Standards Institute (ANSI).

Instrument Maintenance

Cleaning the Instrument

WARNING To prevent electrical shock, disconnect the signal analyzer from mains before cleaning. Use a dry cloth or one slightly dampened with water to clean the external case parts. Do not attempt to clean internally.

Cleaning Connectors

Cleaning connectors with alcohol shall only be done with the instrument power cord removed, and in a well-ventilated area. Allow all residual alcohol moisture to evaporate, and the fumes to dissipate prior to energizing the instrument.

WARNING Keep isopropyl alcohol away from heat, sparks, and flame. Store in a tightly closed container. It is extremely flammable. In case of fire, use alcohol foam, dry chemical, or carbon dioxide; water may be ineffective.

Use isopropyl alcohol with adequate ventilation and avoid contact with eyes, skin, and clothing. It causes skin irritation, may cause eye damage, and is harmful if swallowed or inhaled. It may be harmful if absorbed through the skin. Wash thoroughly after handling.

In case of spill, soak up with sand or earth. Flush spill area with water.

Dispose of isopropyl alcohol in accordance with all applicable federal, state, and local environmental regulations.

Lithium Battery Information

The instrument uses an internal 3.0 VDC lithium battery located on the A4 CPU assembly to power the instrument clock and back up data in SRAM.

The Keysight part number is 1420-0356 (CR2032). The manufacturer's part number is CR2032. This is not a user-replaceable part. See "How to Return Your Instrument for Service". Replaceable parts must be approved or supplied by Keysight Technologies, and replaced by trained service personnel.

DO NOT THROW BATTERIES AWAY BUT COLLECT AS SMALL CHEMICAL WASTE.

NOTE

If the CPU battery is being changed, refer to the "BIOS Settings Verification" in Chapter 19, "Post-Repair Procedures."

WARNING

Danger of explosion if battery is incorrectly replaced. Replace only with the same or equivalent type recommended. Discard used batteries according to the manufacturer's instructions.

Do not throw batteries away but collect as small chemical waste.

Lithium Battery Disposal

The battery contains Lithium/Manganese Dioxide (Li/MnO2). When the battery is exhausted and ready for disposal, dispose of it according to your country's requirements. You can return the battery to your nearest Keysight Technologies Sales and Service office for disposal, if required.

Refer to "Contacting Keysight Technologies" for the Contact Us web address, where a local contact will be listed.

Service Equipment You Will Need

There are certain things that will be required to troubleshoot, adjust, and test the instrument. They include the following:

- Calibration Application Software
- Front End Controller Troubleshooting Kit
- USB Keyboard and Mouse
- USB Storage Device
- Test Equipment

Tools you will need

Figure 1-2 TORX Tool

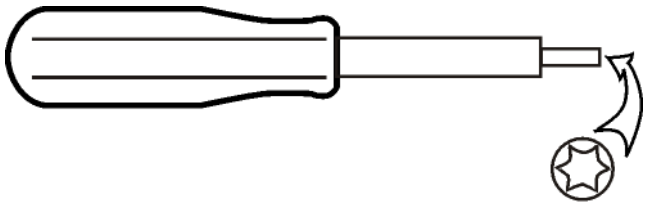

Description	Keysight Part Number
TORX Hand Driver - Size T-8	source locally
TORX Hand Driver - Size T-10	source locally
TORX Hand Driver - Size T-20	source locally
9/16 inch nut driver	source locally
1/4 inch nut driver	source locally
5/16 inch open-end wrench	source locally
1/4 inch open-end wrench	source locally
1/4 inch socket on 4 lb torque wrench	source locally
Cable Puller	5021-6773
Socket, Claw Foot, 5/16 Inch, 1/4 Inch Square Drive	N5191-20299

Calibration Application Software

Information regarding the Keysight X-Series Signal Analyzer Calibration Application Software can be found at the following web site:

https://www.keysight.com/find/calibrationsoftware

Front End Controller Troubleshooting Kit

The Front End Troubleshooting kit contains a PC board, required cables, and installation instructions to verify the switch control logic from the A15 Front End Controller board to the lower level front end components is correct. Oftentimes when troubleshooting an RF front end problem, the logic needs to be verified before one of the front end components is changed. This troubleshooting kit will help identify the defective area in a timely manner. In order to effectively isolate A15 Front End Controller board problems from front end component problems, it is highly recommended that the N9020-60005 Front End Troubleshooting kit is purchased.

The Front End Troubleshooting kit lower level items can be purchased individually or as a complete kit with instructions. The complete listing of kit components, descriptions, and part numbers can be found below.

Keysight Part	Keysight Part Number	Notes
Front End Troubleshooting kit	N9020-60005	
Front End Troubleshooting board	E4410-60115	Part of N9020-60005 Troubleshooting kit
Cable, Low Band switch	E4410-60160	Part of N9020-60005 Troubleshooting kit
Cable, RF Downconverter	E4410-60156	Part of N9020-60005 Troubleshooting kit
Cable, YTF Preselector	E4410-60158	Part of N9020-60005 Troubleshooting kit
Cable, Input Attenuators	E4410-60157	Part of N9020-60005 Troubleshooting kit
Cable, Troubleshooting	8121-1400	Right-angle sma (m) to right-angle mmcx (m) (must be ordered separately)
Connector, MMCX (f) to SMA (f)	n/a	www.hubersuhner.com item number: 31_MMCX-SMZ-50-1/111_OE (must be ordered separately)

USB Keyboard and Mouse

A USB keyboard and mouse will be needed to accomplish many of the different troubleshooting tasks, as well as updating the instrument software. Any standard USB keyboard and mouse should work.

USB Storage Device

The main reason why a USB storage device will be needed is to download instrument software and backup calibration data when the hard drive in an instrument needs to be replaced. The instrument software is about 3 GB. The calibration files are around 30 megabytes.

After an Instrument Repair

If any instrument assemblies have been repaired or replaced, perform the related adjustments and performance verification tests. These tests are done using the N7814A Keysight X-Series Signal Analyzer Calibration Application Software. Refer to Chapter 19, “Post-Repair Procedures,” for a list of post-repair adjustments and performance tests based on which hardware has been changed.

Information regarding the N7814A Keysight X-Series Signal Analyzer Calibration Application Software can be found at

https://www.keysight.com/find/calibrationsoftware

Contacting Keysight Technologies

If you have a problem with your instrument, see Chapter 2, “Boot Up and Initialization”. This section contains a checklist that will help identify some of the most common problems.

There is also support on the world-wide web. The address is:

https://www.keysight.com/find/n9030b_support

FAQs, instrument software updates, documentation, and other support information can be accessed from this site.

To obtain servicing information or to order replacement parts, contact the nearest Keysight office listed. In any correspondence or telephone conversations, refer to the instrument by its model number (N9030B) and full serial number (ex. MY49250887). With this information, the Keysight representative can quickly determine whether your unit is still within its warranty period.

By internet, phone, or fax, get assistance with all your test and measurement needs.

https://www.keysight.com/find/contactus

Instrument Serial Numbers

Keysight makes frequent improvements to its products enhancing performance, usability, or reliability. Keysight service personnel have access to complete records of design changes to each type of instrument, based on the instrument's serial number and option designation.

Whenever you contact Keysight about your instrument, have the complete serial number available. This will ensure that you obtain accurate service information.

A serial number label is attached to the rear of the instrument. This label has two instrument identification entries: the first provides the identification number for each option built into the instrument and the second provides the instrument's serial number.

The serial number has two parts: the prefix (two letters and the first four numbers), and the suffix (the last four numbers). Refer to the following figure.

Figure 1-3 Example Serial Number

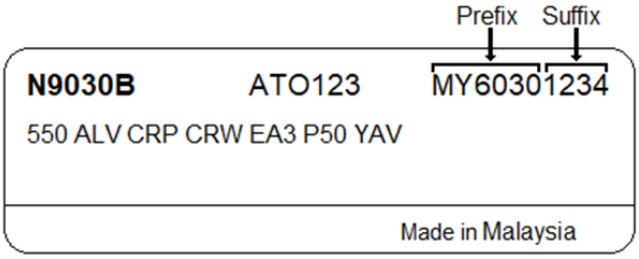

The first two letters of the prefix identify the country in which the unit was manufactured. The remaining four numbers of the prefix identify the date of the last major design change incorporated in your instrument. The four digit suffix is a sequential number and, coupled with the prefix, provides a unique identification for each unit produced. Whenever you list the serial number or refer to it in obtaining information about your instrument, be sure to use the complete number, including the full prefix and the suffix.

The serial number is located on the rear panel serial sticker or when the analyzer is power up, press **System**, **Show System**. The system information can be very useful for updates and post-sale upgrades.

How to Return Your Instrument for Service

Service Order Number

If an instrument is being returned to Keysight for servicing, refer to "Contacting Keysight Technologies" to find the nearest Keysight contact information. In order for Keysight to expedite the repair please be as specific as possible about the nature of the failure.

Helpful failure descriptions:

- Signal level measures 10 dB too low at 1 GHz
- LO Unlock error message appears on screen in spans < 10 MHz
- Analyzer will not complete boot up sequence to signal analyzer mode

Failure descriptions that will most likely increase repair time:

- Analyzer broken
- Analyzer will not make accurate measurements
- Signal drifts

If you have recorded any error messages that appeared on the analyzer display, or have completed a Functional Test or Performance Verification Test, or have any other specific data on the performance of the instrument, please send a copy of this information with the instrument.

Original Packaging

Before shipping, pack the unit in the original factory packaging materials if they are available. If the original materials were not retained, see "Other Packaging" on page 31.

Other Packaging

CAUTION

Instrument damage can result from using packaging materials other than those specified. Never use styrene pellets in any shape as packaging materials. They do not adequately cushion the equipment or prevent it from shifting in the carton. They cause equipment damage by generating static electricity and by lodging in the instrument louvers, blocking airflow.

You can repackage the instrument with commercially available materials, as follows:

1. **Protect the control panel with cardboard.**
2. **Wrap the instrument in antistatic plastic to reduce the possibility of damage caused by electrostatic discharge.**

3. Use a strong shipping container. A double-walled, corrugated cardboard carton with 159 kg (350 lb) bursting strength is adequate. The carton must be both large enough and strong enough to accommodate the instrument. Allow at least 3 to 4 inches on all sides of the instrument for packing material.
4. Surround the equipment with three to four inches of packing material and prevent the equipment from moving in the carton. If packing foam is not available, the best alternative is S.D.-240
   Air Cap™ from Sealed Air Corporation, Hayward, California, 94545.

   Air Cap looks like a plastic sheet filled with 1-1/4 inch air bubbles. Use the pink-colored Air Cap to reduce static electricity. Wrapping the equipment several times in this material should both protect the equipment and prevent it from moving in the carton.
5. Seal the shipping container securely with strong nylon adhesive tape.
6. Mark the shipping container “FRAGILE, HANDLE WITH CARE” to assure careful handling.
7. Retain copies of all shipping papers.

2 Boot Up and Initialization

What You Will Find in This Chapter

This chapter provides information that is useful when starting to troubleshoot a spectrum analyzer. It includes procedures for troubleshooting common failures and provides information on isolating problems in the analyzer.

The following sections are found in this chapter:

Check the Basics on page 34

Instrument Boot Up Process on page 35

Typical instrument boot-up process flow on page 36

Potential Problems During Boot Process on page 39

Instrument Does Not Turn On on page 39

Front Panel Power Switch Is Not Working on page 41

Yellow Standby LED Does Not Turn On on page 42

Green Power On LED Does Not Turn On on page 45

Fan(s) Are Not Operating on page 46

No Keysight Splash Screen Displayed on page 50

Instrument Hangs at the Keysight Splash Screen on page 52

Instrument Cannot Completely Load or Run the Operating System on page 52

Troubleshooting a Blank Display on page 53

Display Backlight Is Not Working on page 54

Initializations Did Not Complete on page 58

Fails an Internal Auto Alignment on page 58

Signal Level Verification on page 59

Signal Level Problem with Input Frequencies < 3.6 GHz on page 59

Signal Level Problem with Input Frequencies > 3.6 GHz on page 60

Check the Basics

Before calling Keysight Technologies or returning the instrument for service, please make the following checks:

1. Is there power at the power outlet? At the power receptacle on the instrument?
2. Is the instrument turned on? Check to see if the front panel LED is green, which indicates the power supply is on.
3. If other equipment, cables, and connectors are being used with the instrument, make sure they are connected properly.
4. Review the procedure for the measurement being performed when the problem appeared. Are all the settings correct?
5. If the instrument is not functioning as expected, return the unit to a known state by pressing the **Mode Preset** key.
6. Is the measurement being performed, and the results that are expected, within the specifications and capabilities of the instrument? Refer to the Specifications Guide for specifications.
7. In order to meet specifications, the instrument must be aligned. Press **System**, **Alignments**, **Align Now**, **All**. The diagnostic tests should all pass. If the instrument displays a failure during these tests, refer to “Fails an Internal Auto Alignment” on page 58.
8. Check to see if the instrument has the latest firmware before starting the troubleshooting procedure. Press **System**, **Show System**. The firmware revision is listed under **Firmware Revision**. For more information, refer to Chapter 21, “Instrument Software”, on page 615.
9. Is the instrument displaying an error message? If so, refer to X-Series Instrument Messages Guide for more information.
10. If the necessary test equipment is available, perform the functional checks in Chapter 20, “Functional Tests”, on page 579.

Instrument Boot Up Process

This section describes the instrument boot up process from initial AC power to a normal analyzer sweep. The boot process time from start to finish will take 6 to 8 minutes. This boot time will vary slightly depending on the analyzer hardware configuration, installed options and the number of measurement applications.

By default, the measurement applications will preload before the spectrum analyzer application is fully booted. The analyzer boot time can be shortened if needed by turning off the preload process for applications that are not going to be used. If this is done, the preload process will be bypassed during the application boot up. If a certain measurement mode is selected that did not preload during the original boot, that measurement application will preload at that time. When this occurs the mode switching time will take longer. Once the application is loaded all subsequent mode switches will be much faster.

If the user does not want the measurement applications to preload during the application boot process, they can go to the **Preload / Unload Modes** screen and configure them as they would like, as seen in Figure 2-1. By default all applications are checked and therefore, will preload when the instrument application is launched. Uncheck any applications to bypass the preloading process.

Figure 2-1 Configure Application

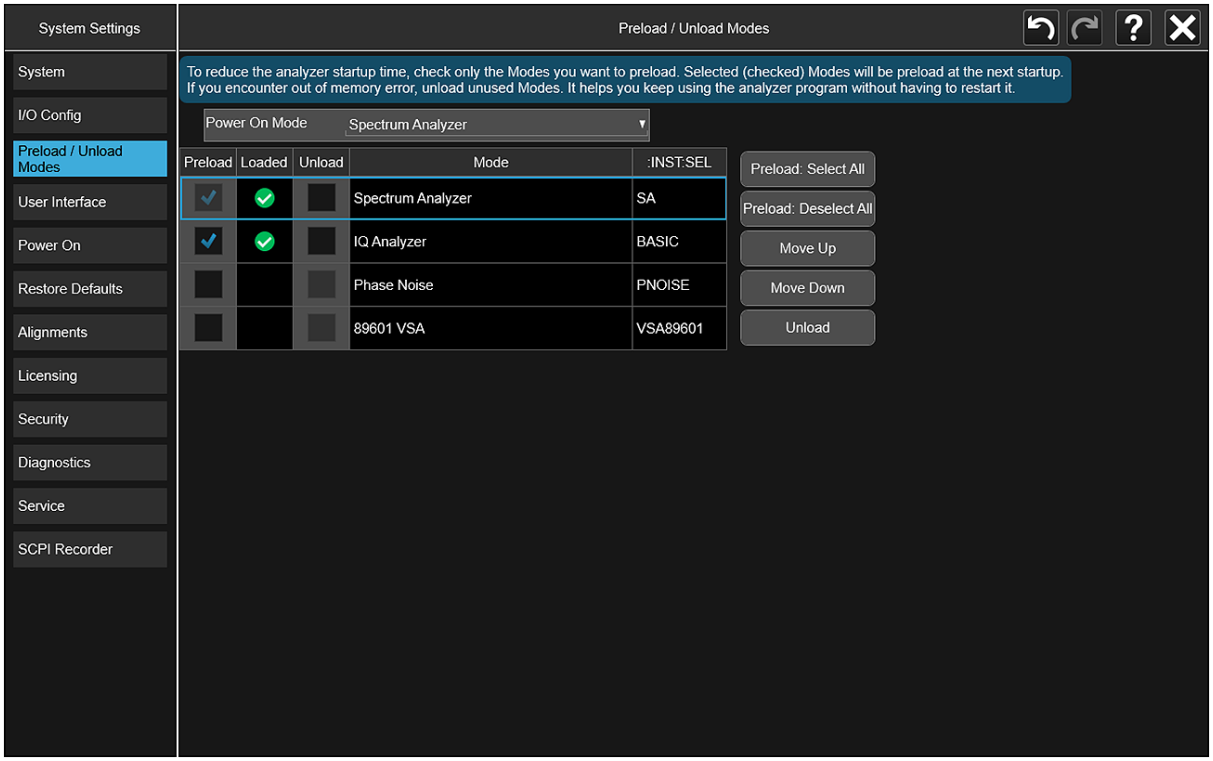

Typical instrument boot-up process flow

1. Plug in the AC power cord from a known good AC power source into the rear panel of the analyzer.
2. The yellow standby LED illuminates on the analyzer front panel to the left-hand side of the On/Off button. If the yellow Standby LED is not illuminating, refer to the "Yellow Standby LED Does Not Turn On" section in this chapter.
3. To turn the analyzer on, press the On/Off button. The yellow Standby LED should turn off and the green Power On LED should illuminate. A green Power On LED indicates that the power supply has received an "On" command from the A4 CPU assembly. If the instrument does not turn on refer to the "Instrument Does Not Turn On" section in this chapter. If the instrument turns on, but the green Power On LED does not turn on refer to the "Green Power On LED Does Not Turn On" section in this chapter.

NOTE

If the analyzer AC power source was removed by the operator by pulling the power cord or by turning off the analyzer via a power main switch on a test rack, the analyzer will automatically power on without having to press the On/Off button on the front panel.

4. The instrument fans should start running. The fans are mounted on the left-hand side of the analyzer and draw air into the instrument to cool the internal circuitry. If a fan is not running, refer to the "Fan(s) Are Not Operating" section in this chapter.
5. The Keysight Technologies splash screen is displayed in white font on a dark background for ~5-10 seconds after the analyzer is turned on. If the Keysight Technologies logo is not displayed, refer to the "No Keysight Splash Screen Displayed" section in this chapter. If the instrument hangs at the Keysight Technologies splash screen, refer to the "Instrument Hangs at the Keysight Splash Screen" section in this chapter.
6. Verify text is displayed on screen where the user has the option of booting Microsoft Windows or running the Instrument Image Recovery System. The default selection is to boot Microsoft Windows. If a recovery is required, press the Down Arrow key on the front panel of the analyzer within 5 seconds to highlight "Instrument Image Recovery System" and press the **Enter** key on the analyzer, otherwise Microsoft Windows will begin to boot. If the Microsoft Windows boot screen is not displayed within a few seconds, refer to the "Instrument Cannot Completely Load or Run the Operating System" section in this chapter.

7. If the recovery system is not selected, the Microsoft Windows operating system will begin to boot up. This will take ~20-30 seconds.

NOTE

If a recovery was selected, follow the on-screen instructions and perform a system recovery. Additional information about performing a system recovery can be found in Chapter 11, “CPU/Disk Drive.” in this manual.

8. The Keysight Technologies logo is displayed in white font on a blue background while Windows finishes loading user preferences. This can take up to 4 minutes. If this does not occur, refer to the “Instrument Cannot Completely Load or Run the Operating System” section in this chapter.
9. By default, the initialization process of the X-Series spectrum analyzer application begins loading. The signal analyzer screen appears. This screen remains for slightly over 1 minute. If any of the initializing processes do not complete, refer to the “Initializations Did Not Complete” section in this chapter.
10. While the application software is loading, the instrument will perform a number of internal alignments before it begins to sweep. The number of alignments is dependent on which hardware options are present. If an alignment fails, refer to the “Fails an Internal Auto Alignment” section in this chapter.

Once the instrument application is fully initialized and aligned, the sweep should resemble Figure 2-2 when delivered from the factory. This completes the boot process from initial AC power to the spectrum analyzer application.

IMPORTANT

If the power up state has been changed from the factory power on state by the user, the analyzer will boot to that state.

Figure 2-2 Typical Instrument Sweep at Power-up

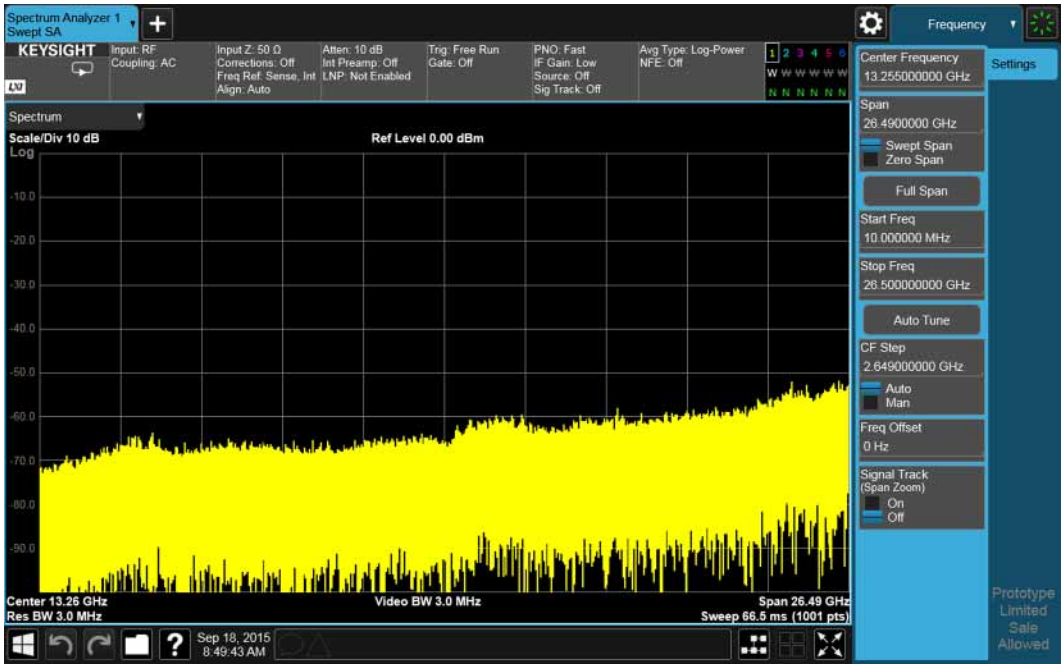

Potential Problems During Boot Process

This section describes potential problems that may occur if there is an issue that prohibits the instrument from completing a full boot up to the spectrum analyzer application.

NOTE **Before replacing an assembly to resolve any of these issues, verify the midplane and motherboard interconnects are mechanically secure.**

Instrument Does Not Turn On

The control for the instrument turning on comes from the A4 Processor board assembly. However, there are other assemblies that can cause this process to be interrupted due to many factors. If all the standby power supplies are working, when the front panel power button is pressed the A4 Processor assembly receives this signal and tells the A6 Power Supply assembly to turn on. It also turns off the Yellow Standby LED and turns on the Green Power On LED. These signals are routed through the A7 Midplane board and the A8 Motherboard, then sent to and from the A1A2 Front Panel Controller board through W1, the ribbon cable. The instrument could also not turn on if there is excessive current being drawn by any one of the assemblies in the instrument. Of course, the power for this all originates with the A6 Power Supply Assembly. When the instrument will not power on it could be due to any one of these assemblies. This procedure will help to determine which one is the cause.

This procedure assumes that the yellow Standby LED does turn on when the AC power is connected to the rear panel of the instrument. If it doesn't, refer to the "Yellow Standby LED Does Not Turn On" section before proceeding.

If the instrument turns on and operates properly but the green Power On LED does not work, see the "Green Power On LED Does Not Turn On" section in this chapter.

1. **The instrument power will only turn on when the instrument is connected to an AC power source that has a voltage level and frequency of that specified for the instrument and the front panel On/Off button has been pressed. Before proceeding, verify that these requirements are being met. Refer to the instrument rear panel for these requirements.**
2. **Remove the AC power cord and then remove the instrument cover, top brace, and power supply bracket. Refer to Chapter 18, "Assembly Replacement Procedures," in this manual.**
3. **Connect the AC power cord to the instrument, but do not try to turn it on, leave it in standby mode.**
4. **Momentarily short TP520 (Test Point 520) to ground on the A7 Midplane board, as seen in Figure 2-3.**

   Does the instrument turn on?

If yes:

Refer to the "Front Panel Power Switch Is Not Working" section in this chapter.

If no:

Proceed to the next step.

NOTE

If the instrument tries to turn on, but then quickly shuts down, there is most likely an assembly that is overloading the power supply and causing it to shut down. In this case, remove or disconnect assemblies to isolate the one that is overloading the power supply. This could also be caused by a faulty A6 Power Supply as well.

Figure 2-3 A7 Midplane Board TP520 Location

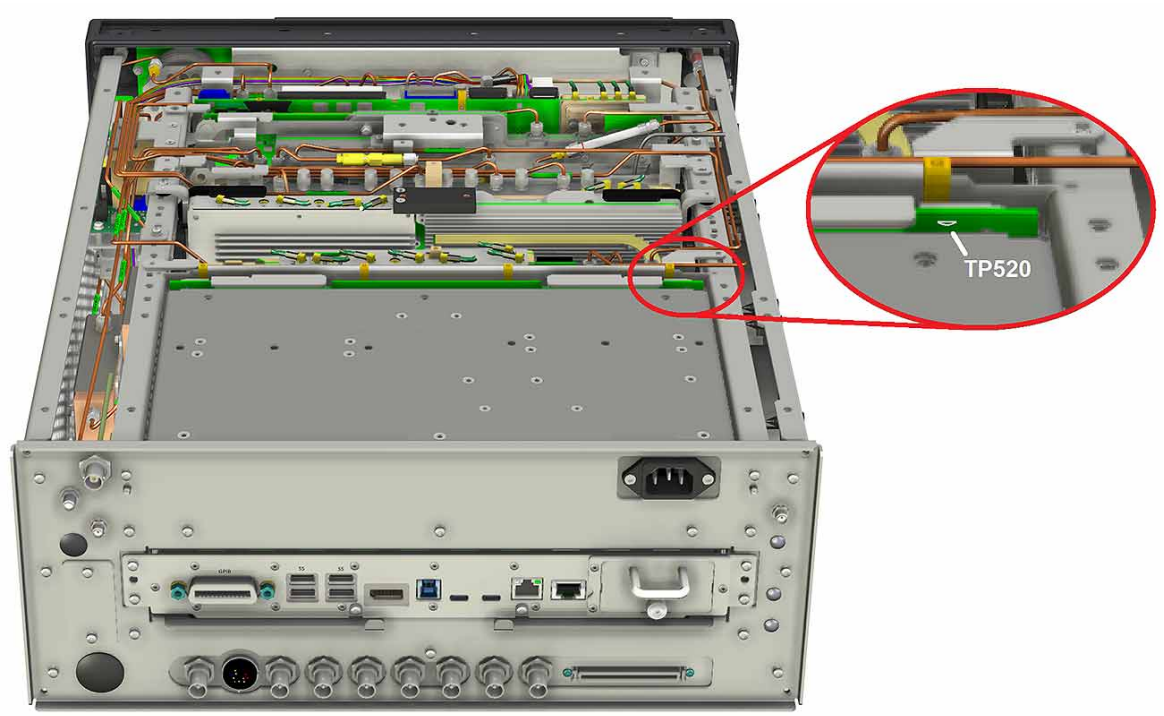

5. Use a voltmeter to measure the DC voltage on TP520 on the A7 Midplane board, as seen in Figure 2-3.

   Does pin #2 measure at least +3.0 VDC?

   If yes:

   Replace the A4 System Processor assembly.

   If no:

   Replace the A6 Power Supply assembly.

Front Panel Power Switch Is Not Working

Since the instrument will turn on when TP520 on the A7 Midplane board is shorted to ground, and TP520 pulls down the same control line that the front panel power switch does, the problem must be in the connections between TP520 and the front panel power switch. Use the following procedure to determine where the problem is located.

1. With the instrument power turn off and the AC power cord removed from the instrument, remove the A1 Front Panel assembly. Refer to Chapter 18, “Assembly Replacement Procedures,” in this manual.
2. Referring to Figure 2-4, remove W1 from J1 of the A1A2 Front Panel Controller board and measure the resistance from pin #68 of J1 to ground while holding down the front panel power switch.

   Does the resistance from Pin #68 to ground measure approximately 1k ohms?

   If yes:

   Replace ribbon cable W1 that connects the front panel assembly to the A7 Midplane board and verify that the instrument can now be turned on using the front panel power switch.

   If no:

   Replace the A1A2 Front Panel Controller.

Figure 2-4 A1 Front Panel Power Switch Troubleshooting

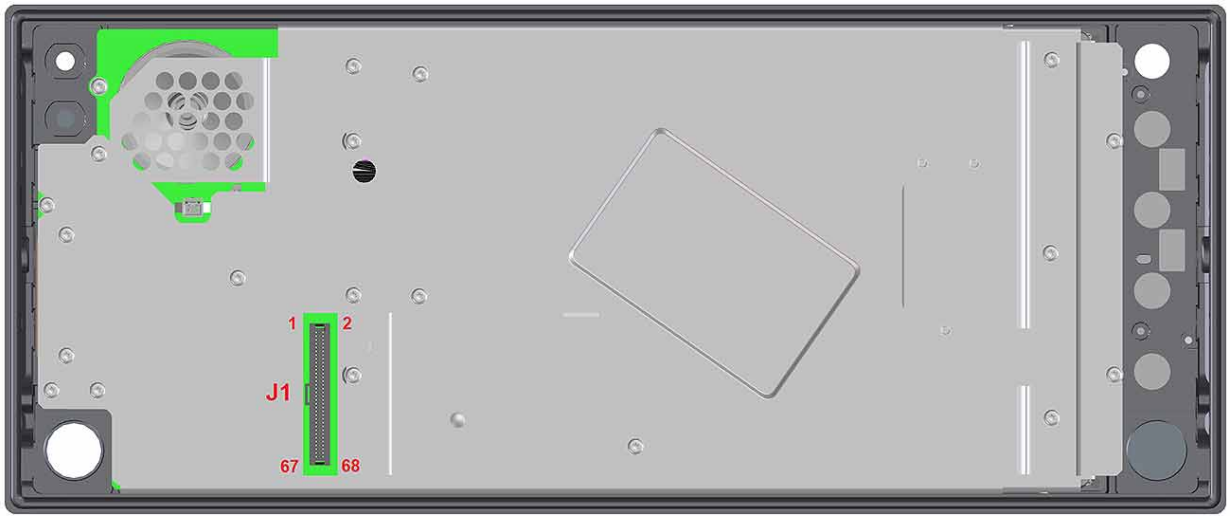

Yellow Standby LED Does Not Turn On

Control of the yellow front panel Standby LED comes from the A4 Processor board assembly. This signal is routed through the A7 Midplane board, and the A8 Motherboard, before being sent to the A1A2 Front Panel Controller board through W1. Of course, the power for this all originates with the A6 Power Supply Assembly. When the Standby LED does not come on it could be due to any one of these assemblies.

This procedure will help to determine which one is the cause. If the instrument turns on and operates properly but the yellow Standby LED does not work, then all that will need to be done is to trace where the control signal for the LED is being lost between the A7 Midplane board and the A1A7 Front Panel Power Switch Keyboard.

1. The Standby LED will only turn on when the instrument is connected to an AC power source that has a voltage level and frequency of that specified for the instrument. Before proceeding verify that these requirements are being met. Refer to the instrument rear panel for these requirements.
2. Remove the AC power cord and then remove the instrument cover. Refer to Chapter 18, “Assembly Replacement Procedures,” in this manual.
3. Reconnect the AC power cord to the instrument, but do not turn it on.
4. Referring to Figure 2-5, verify that both the +5.1V STBY and +15 STBY LEDs on the A7 Midplane board are on (green).

   Are both standby LEDs on?

   If yes:

   Proceed to the next step.

   If no:

   Replace the A6 Power Supply assembly.

NOTE The Top Brace and Power Supply Bracket do not need to be removed to see the A7 Midplane board LEDs.

Figure 2-5 A7 Midplane Board Standby Supplies

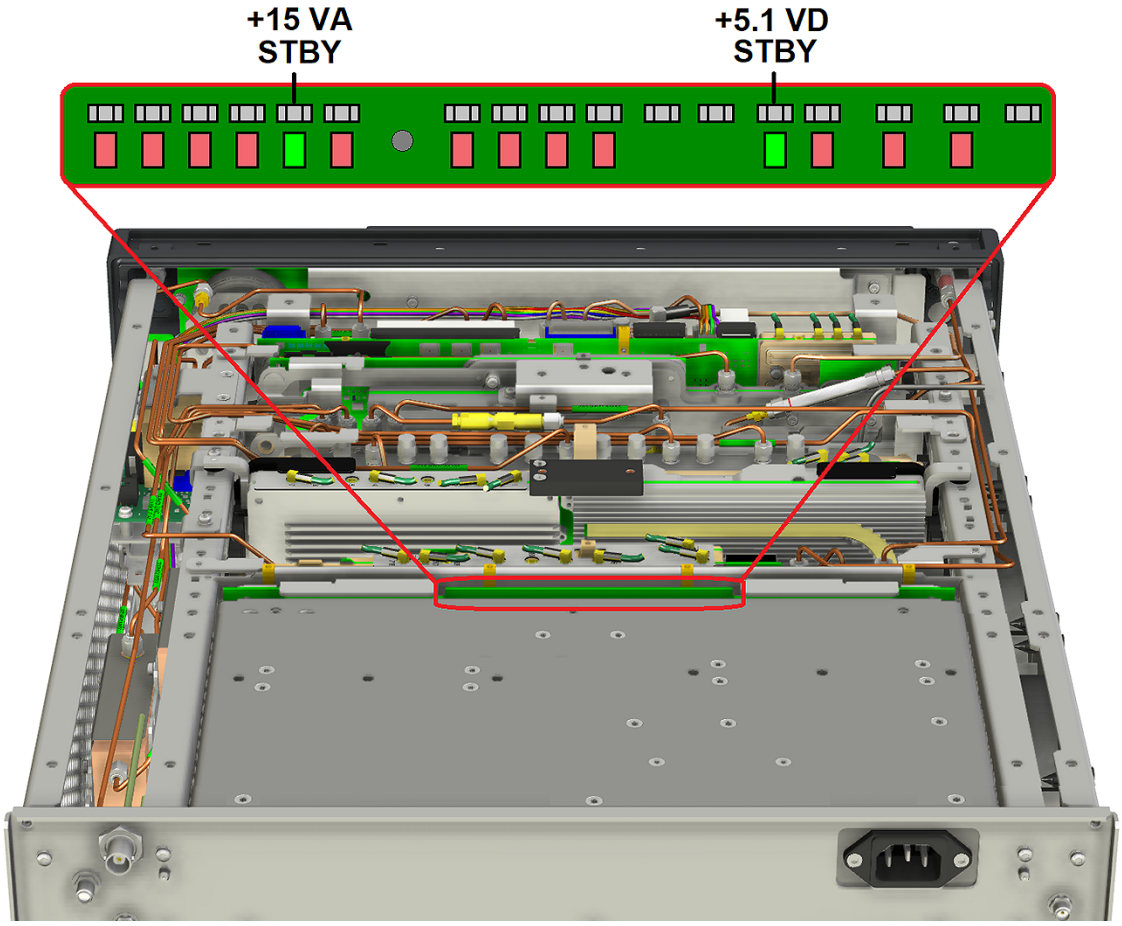

5. Remove the AC power cord from the instrument.
6. Referring to Figure 2-6, remove the A1 Front Panel from the instrument along with W1 from J9 of the A8 Motherboard.
7. Reconnect the AC power cord to the instrument, but do not turn it on.
8. Referring to Figure 2-6, measure the DC voltage from pin #64 of J9 of the A8 Motherboard to ground.

   Does the DC voltage from pin #64 to ground measure approximately +5 VDC?

   If yes:

   Replace the A1A4 Keyboard.

   If no:

   Replace the A4 System Processor Assembly.

Figure 2-6 A8 Motherboard J9 Front Panel Power LED Control Lines

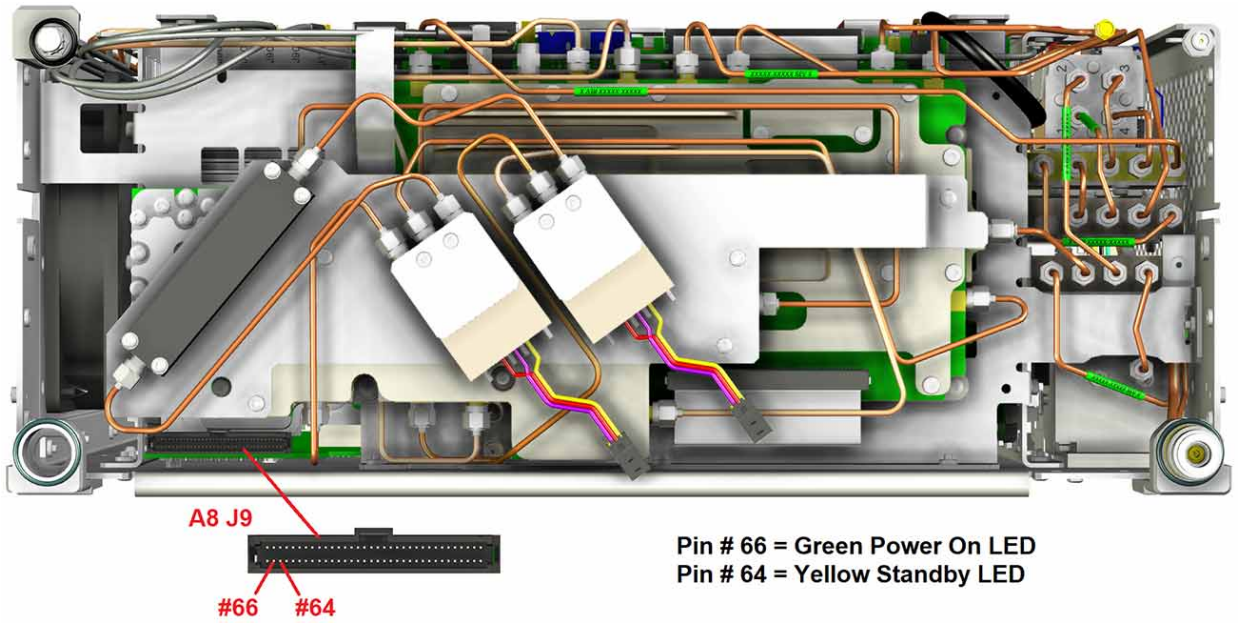

Green Power On LED Does Not Turn On

Control of the green front panel Power On LED comes from the A4 Processor board assembly. This signal is routed through the A7 Midplane board, and the A8 Motherboard, before being sent to the A1A2 Front Panel Controller board through W1. Of course, the power for this all originates with the A6 Power Supply Assembly. When the Power On LED does not come on it could be due to any one of these assemblies. This procedure will help to determine which one is the cause.

This procedure assumes that the yellow Standby LED does turn on when the AC power is connected to the rear panel of the instrument. If it doesn't, refer to the "Yellow Standby LED Does Not Turn On" section before proceeding. It also assumes that the instrument will turn on when the front panel power button is pressed. If it doesn't, refer to the "Instrument Does Not Turn On" section before proceeding.

If the instrument turns on and operates properly but the green Power On LED does not work, then all that will need to be done is to trace where the control signal for the LED is being lost.

1. The Power On LED will only turn on when the instrument is connected to an AC power source that has a voltage level and frequency of that specified for the instrument and the front panel On/Off button has been pressed. Before proceeding verify that these requirements are being met. Refer to the instrument rear panel for these requirements.
2. Remove the AC power cord and then remove the instrument cover. Refer to Chapter 18, "Assembly Replacement Procedures," in this manual.
3. Referring to Figure 2-6, remove the A1 Front Panel from the instrument along with W1 from J9 of the A8 Motherboard.
4. Reconnect the AC power cord to the instrument and turn it back on by momentarily shorting TP520 on the A7 Midplane board to ground, as seen in Figure 2-3.
5. Referring to Figure 2-6, measure the DC voltage from pin #66 of J9 of the A8 Motherboard to ground.

   Does the DC voltage from pin #66 to ground measure approximately +5 VDC?

   If yes:

   Replace the A1A4 Keyboard.

   If no:

   Replace the A4 System Processor Assembly.

Fan(s) Are Not Operating

The instrument cooling fans are on the left side of the instrument. They should all come on as soon as the instrument is turned on and draw air into the instrument.

Control of the instrument fans comes from the A6 Power Supply assembly. This signal is routed from the A6 Power Supply through the A7 Midplane board, where there is a test point and LED to monitor the level, and is then routed to the A8 Motherboard where it is filtered before being sent to the fans. There is a temperature sensor on the A8 Motherboard that feeds information back to the A6 Power Supply, which regulates the speed of the cooling fans. When the fans do not come on it could be due to either one of these assemblies. This procedure will help to determine which one is the cause.

The procedure in this section assumes that the green Power On LED on the front panel does turn on when the instrument is turned on. If it doesn't, refer to the "Green Power On LED Does Not Turn On" section before proceeding.

CAUTION If a fan is not running, assemblies in the instrument could overheat and be damaged if it is powered on for a long period of time.

NOTE The instrument fans will only turn on when the instrument is connected to an AC power source that has a voltage level and frequency of that specified for the instrument and the front panel On/Off button has been pressed. Before proceeding verify that these requirements are being met. Refer to the instrument rear panel for these requirements.

1. Remove the AC power cord and then remove the instrument cover. Refer to Chapter 18, "Assembly Replacement Procedures," in this manual.
2. Plug the AC power cord back into the instrument and turn it on.
3. If any of the fans are not spinning, verify that the FAN control voltage is correct by measuring the DC voltage at TP522 on the A7 Midplane board, as seen in Figure 2-7.

   Does the voltage at TP522 measure at least +7 VDC?

   If yes:

   Proceed to the next step.

   If no:

   Replace the A6 Power Supply assembly.

NOTE The red Fan_P Failure LED below TP522 will also be on, while the instrument is turned on, if there is an insufficient voltage.

Figure 2-7 A7 Midplane Board Fan Control Voltages

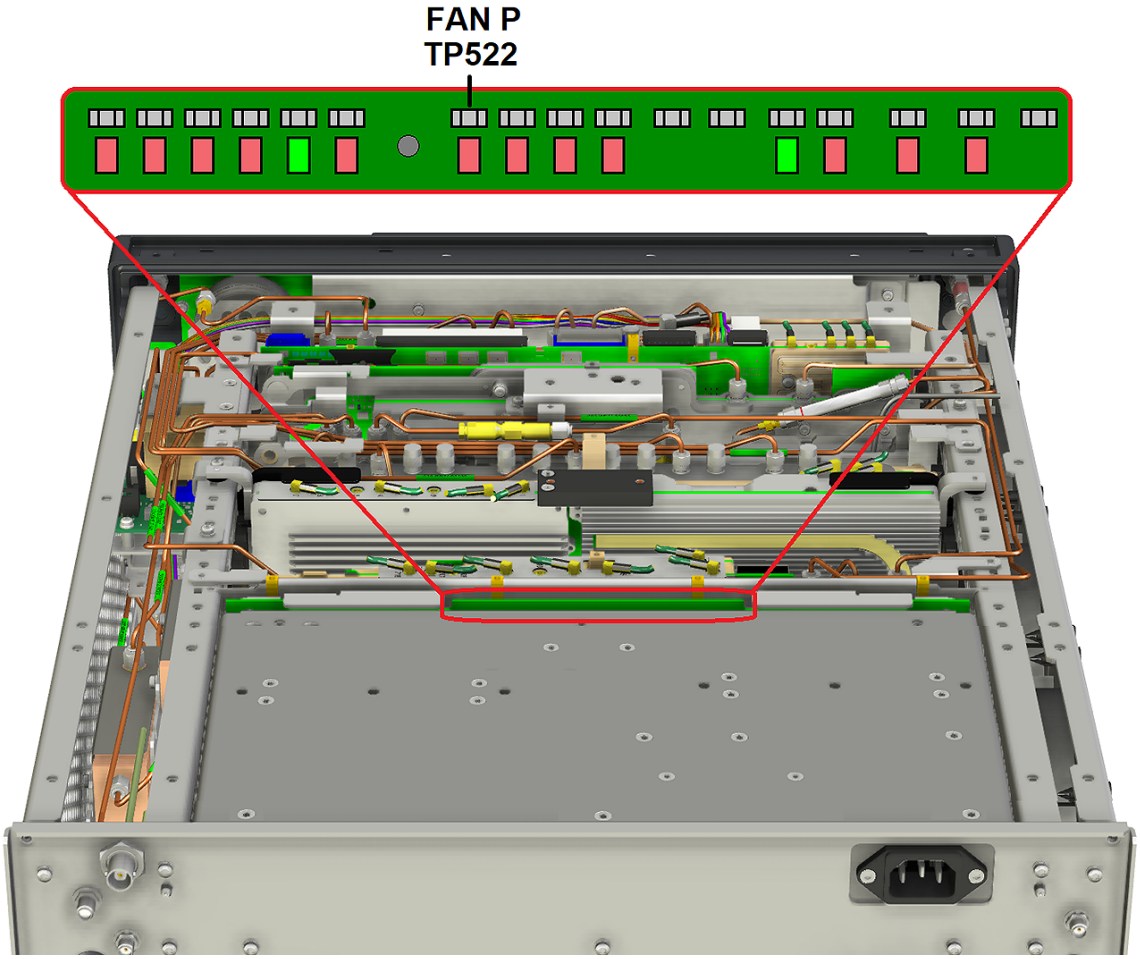

4. Turn the instrument off and remove the AC power cord from the rear panel of the instrument.
5. Without unplugging the fan wires from the A8 Motherboard, remove the fan assembly. Refer to Chapter 18, “Assembly Replacement Procedures,” except remove the power supply bracket instead of the front frame assembly. Lay the fan assembly as shown in Figure 18-105.
6. Verify that the wire harnesses for all of the fans are securely plugged into J6, J7, and J8 of the A8 Motherboard and that none of the connectors or wires are damaged. Refer to Figure 2-8 for the three connector locations.

   Are there any disconnected or damaged connectors or wires?

   If yes:

   Make the needed repairs and verify the functionality.

   If no:

   Proceed to the next step.

7. Disconnect all of the fan wire harnesses from the A8 Motherboard.
8. Reconnect the AC power cord to the instrument and turn it back on. When the display shows the choice to either boot Microsoft Windows or to run the Instrument Image Recovery System press the front panel up or down key to stop the instrument from going any farther in the boot up process.

CAUTION

Extreme caution needs to be taken when making the following fan control voltage measurements, as it would be very easy to accidentally short the control lines being measured to the chassis ground when probing them, which could cause further damage to the instrument. To help avoid this, use a probe that is insulated up to the tip.

9. On the A8 Motherboard, measure the DC voltages from pin #1 and pin #3 of J6, J7, and J8 to chassis ground, as seen in Figure 2-8.

   Do all the voltages at pin #1 and pin #3 of all three connectors measure approximately +8 VDC?

   If yes

   Replace the fan(s) that is not working.

   If no:

   Replace the A8 Motherboard.

NOTE

When the instrument is first turned on the voltage level measured should be at the maximum level that the fans would expect to see.

Figure 2-8 Fan Power Connector Locations on A8 Motherboard

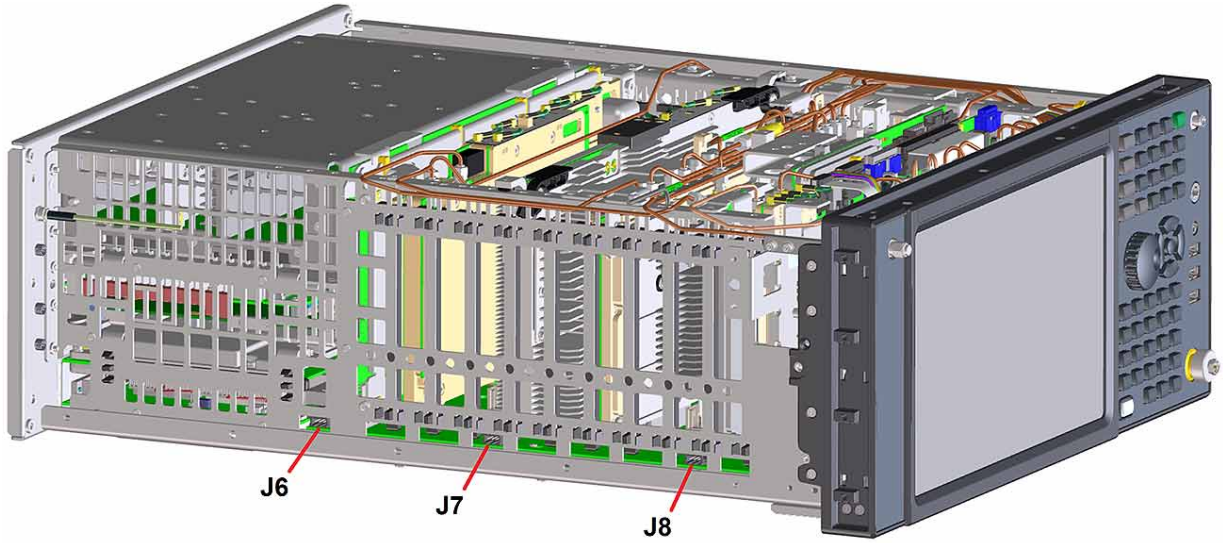

No Keysight Splash Screen Displayed

(Black background with white “Keysight Technologies” text)

A problem of not displaying the Keysight splash screen could be caused by many different things. It could be due to a down power supply, a processor hardware problem, an instrument boot-up process error, a display section failure, etc.

This procedure assumes that the instrument is turning on, as evidenced by the green Power On LED on the front panel turning on as well as the instrument fans. If this instrument is not turning on, refer to the “Instrument Does Not Turn On” section in this chapter before proceeding.

1. Turn the instrument on and connect an external monitor the rear panel VGA port or DisplayPort connector.

   Does the external monitor display the correct information?

   If yes:

   Proceed to the Troubleshooting a Blank Display section in this chapter.

   If no:

   Proceed to the next step.

2. Remove the AC power cord and the instrument cover. Refer to Chapter 18, “Assembly Replacement Procedures,” in this manual.
3. Reconnect the AC power cord and turn the instrument on.
4. Referring to Figure 2-9 verify that all the red power supply fault LEDs along the top of the A7 Midplane board are off, and all the green power supply on LEDs are on. If there are any questions as to whether a power supply is at the correct level, see the “A7 Midplane Assembly Troubleshooting” section in Chapter 12, “Power Supply/Midplane,” for the list of power supply test points.

   Are all the power supply LEDs in the correct state?

   If yes:

   Replace the A4 System Processor assembly.

   If no:

   Replace the A6 Power Supply assembly.

Figure 2-9 A7 Midplane Board Power Supply LEDs

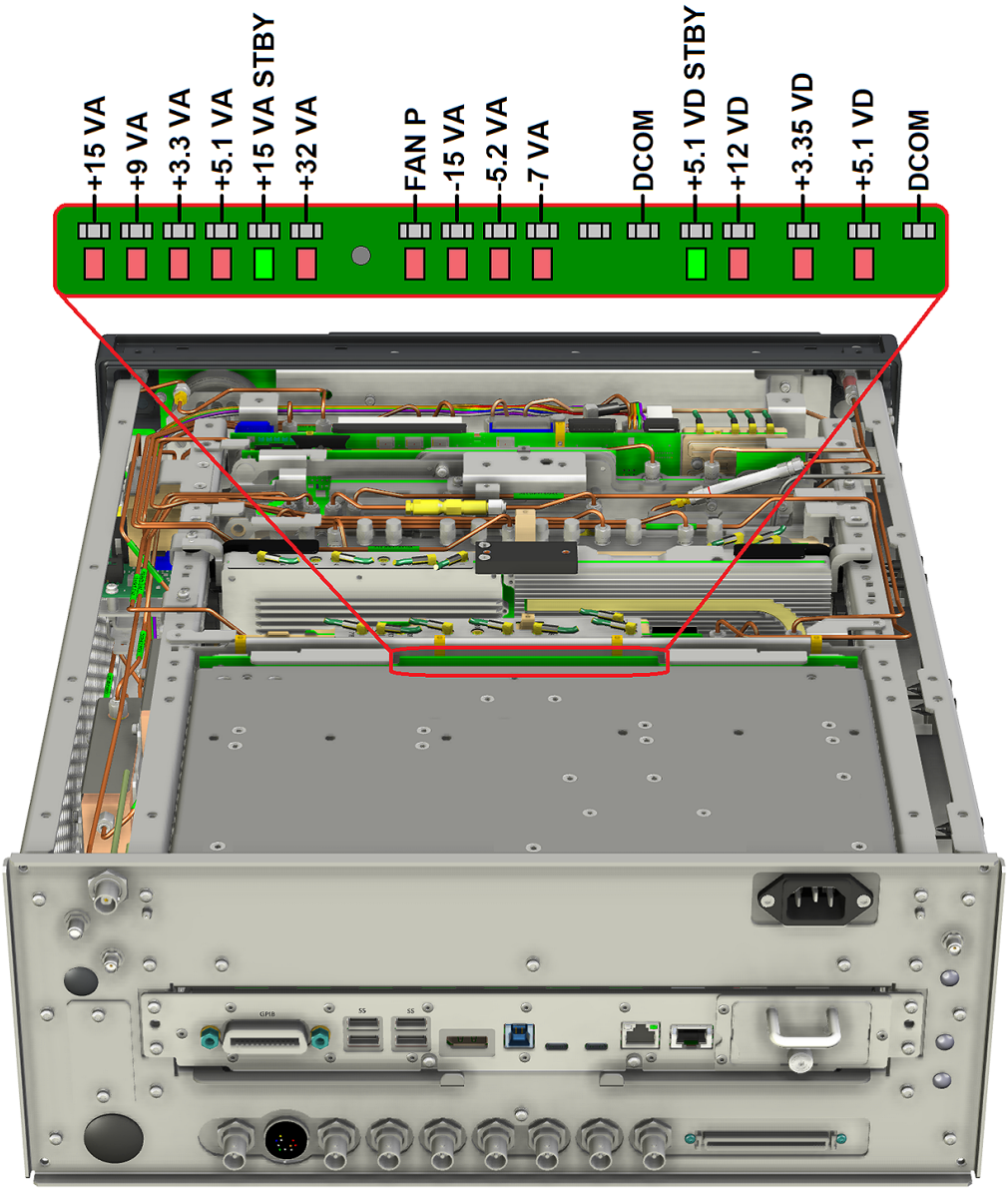

Instrument Hangs at the Keysight Splash Screen

A problem of the instrument hanging at the Keysight splash screen could be caused by many different things. It could be due to a down power supply, a processor hardware problem, an instrument boot-up process error, etc.

1. Remove the AC power cord and the instrument cover. Refer to Chapter 18, "Assembly Replacement Procedures," in this manual.
2. Reconnect the AC power cord and turn the instrument on.
3. Referring to Figure 2-9 verify that all the red power supply fault LEDs along the top of the A7 Midplane board are off, and all the green power supply on LEDs are on. If there are any questions as to whether a power supply is at the correct level, see the "A7 Midplane Assembly Troubleshooting" section in Chapter 12, "Power Supply/Midplane," of this manual for the list of power supply test points.

   Are all the power supply LEDs in the correct state?

   If yes:

   Replace the A4 System Processor assembly.

   If no:

   Replace the A6 Power Supply assembly.

Instrument Cannot Completely Load or Run the Operating System

A problem of the instrument not loading the operating system can be caused by a few different things. It could be due to a processor hardware problem, an instrument boot-up process error, corrupt disk drive, etc.

This procedure assumes that the instrument can get past the Keysight splash screen at power on. If it doesn't, refer to the "Instrument Hangs at the Keysight Splash Screen" section before proceeding.

1. With the instrument powered off, verify that there are no external USB storage devices connected to the instrument and that the A5 Disk Drive is fully seated into the A4 System Processor.
2. Power on the instrument and attempt to run the "Instrument Image Recovery Process" in Chapter 11, "CPU/Disk Drive."

   If the image recovery process does not correct the issue, or the instrument does not get far enough along the boot process to even select it, the replace the A5 Disk Drive.

Troubleshooting a Blank Display

This section is intended to troubleshoot a display system problem that would cause the internal LCD to be blank. It is assumed that the rest of the instrument is booting up and functioning properly.

It is also assumed that there is a normal video signal at the rear panel DisplayPort. If the rear panel display output is also not working, go to the "No Keysight Splash Screen Displayed" section in this chapter.

Once it has been determined that the rest of the instrument appears to be functioning properly, use the following procedure to determine the most likely cause of the blank display.

1. Turn the instrument on and allow it a few minutes to complete its power on process.
2. Shine a bright light onto the blank display.

   Can the instrument application be seen at all when the light is directed on the display?

   If yes:

   Proceed to the "Display Backlight Is Not Working" section in this chapter.

   If no:

   Proceed to the next step.
3. Check the video signal path connections for any irregularities from the video controller on the A4 Processor assembly to the A1A3 Touch Screen Display:
   - A4 Processor assembly to A7 Midplane board
   - A7 Midplane board to A8 Motherboard
   - A8 Motherboard to the A1A2 Front Panel Controller board via ribbon cable W1
   - A1A2 Front Panel Controller board to A1A4 Touch Screen Display via flex-circuit A1W1

   If all these connections are properly made and none of the cables are damaged, proceed to the next step.
4. At this point, the most likely cause for a video problem is the A4 System Processor assembly; however, it could be the result of a defective Touch Screen Display.

Display Backlight Is Not Working

This section is intended to troubleshoot a display backlight issue that would cause a functioning instrument display to be blank. It is assumed that it has already been verified that the instrument application can be seen on the blank display with the use of a bright light pointed at the display, indicating that the display is able to display information, only the backlight is not on. This procedure will assist in determining why the backlight is not on.

There are two user backlight controls on the **System**, **User Interface** menu. They are enable and intensity. If the user has set the enable to off or the intensity to such a low value that the display cannot be seen, when the instrument power is cycled the backlight will be automatically enabled and the intensity will return to a normal level. So if the backlight is not on, it should not be due to either of these settings once the instrument power has been cycled.

1. Remove the AC power cord, the instrument cover, the top brace, and the power supply bracket. Refer to Chapter 18, “Assembly Replacement Procedures,” in this manual.
2. Reconnect the AC power cord and turn the instrument on.
3. Referring to Figure 2-10, use a DC voltmeter to measure the voltage at TP503 on the A7 Midplane board.

   Does the voltage at TP503 measure at least +11 VDC?

   If yes:

   Proceed to the next step.

   If no:

   Replace the A6 Power Supply assembly.

NOTE The red +12 VD LED below TP503 will also be on, while the instrument is turned on, if there is an insufficient voltage.

Figure 2-10 Backlight Power Supply

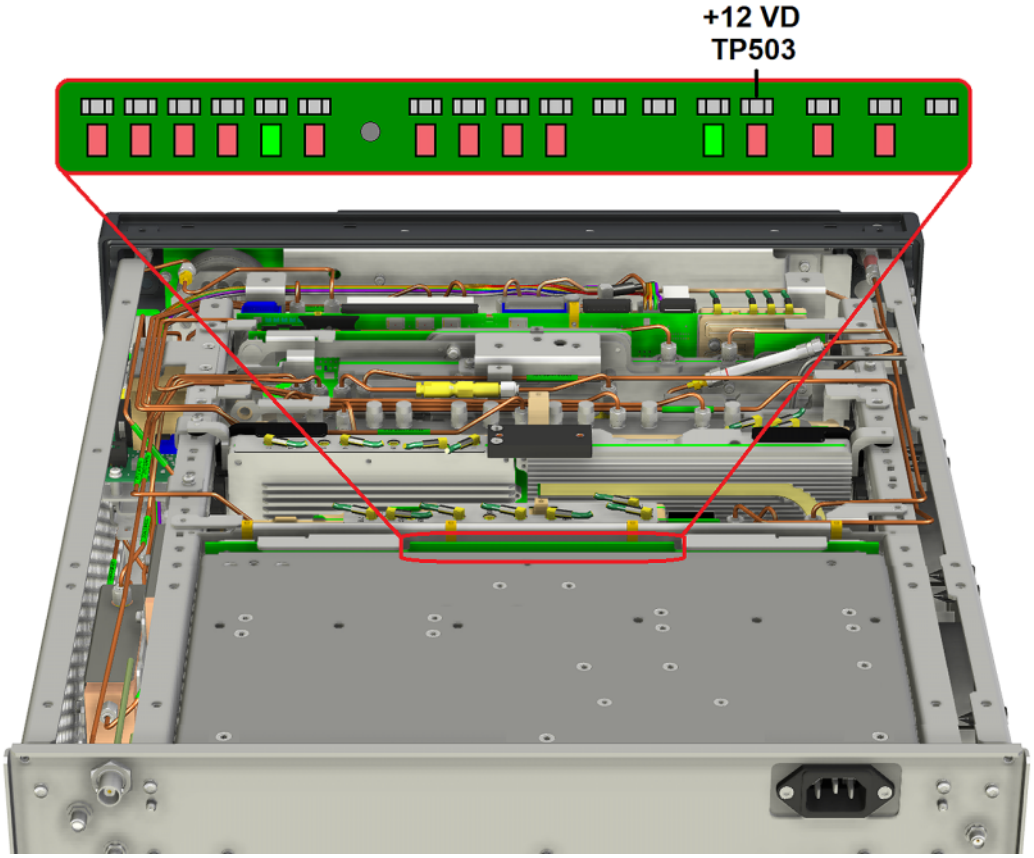

4. Remove the A1 Front Panel assembly along with the connecting ribbon cables. Refer to Chapter 18, “Assembly Replacement Procedures,” in this manual.
5. Remove the A1MP8 Front Panel Shield from the A1 Front Panel assembly, as seen in Figure 2-11.

Figure 2-11 Front Panel Shield Removal

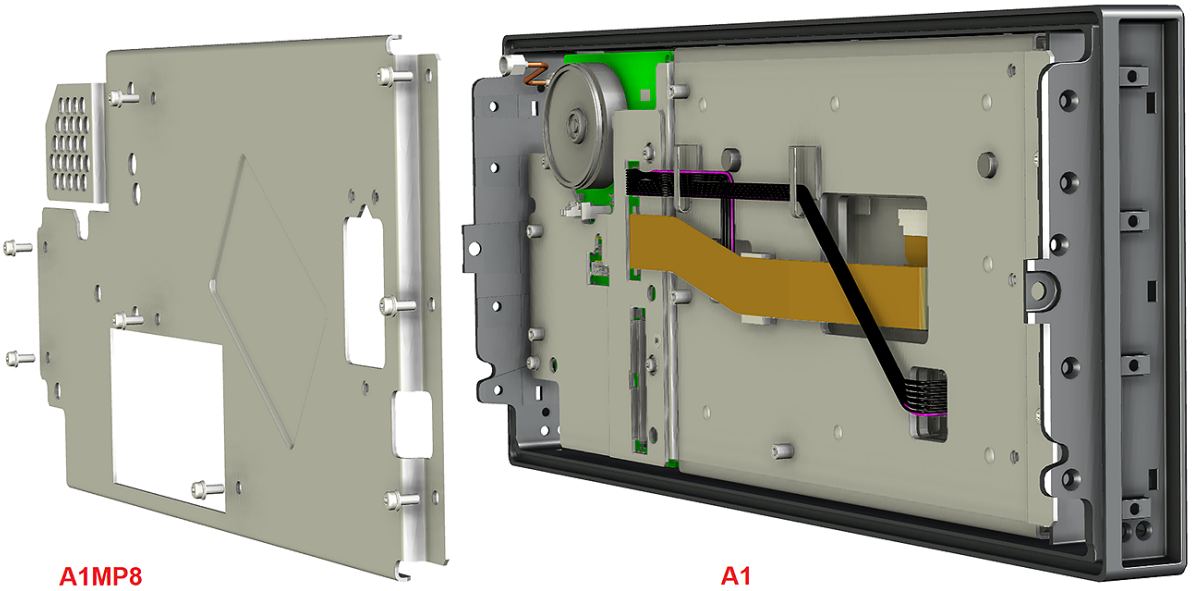

6. Reconnect the W1 ribbon cable from the A8 Motherboard to the A1A2 Front Panel Controller board J1.
7. Reconnect the AC power cord and turn the instrument on.
8. Referring to Figure 2-12, measure the DC voltage from pins #13 and 15 of J16 to ground. This is the power supply for the display backlight.

   Do the DC voltages on pins #13 and 15 both measure approximately +11 VDC?

   If yes:

   Proceed to the next step.

   If no:

   Replace the A1A2 Front Panel Controller board.

Figure 2-12 Backlight Control Voltage Verification

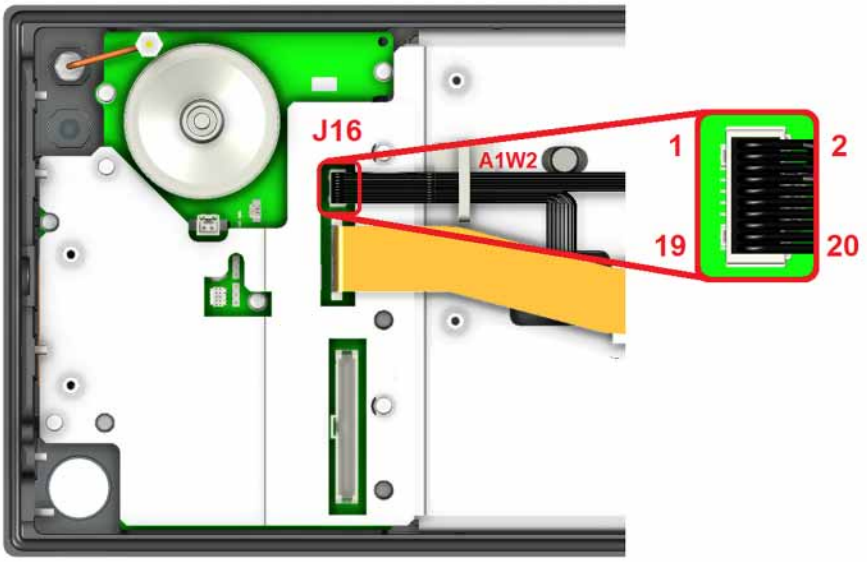

9. Referring to Figure 2-12, measure the DC voltage from pin #19 of J16 to ground. This is the backlight enable control line.

   Does the DC voltage on pin #19 measure at least +3 VDC?

   If yes:

   Proceed to the next step.

   If no:

   Replace the A1A2 Front Panel Controller board.

NOTE

The instrument's Windows screen timeout settings are set by default to never turn the screen off, but the CPU will disable the display backlight if the setting is changed to a period of time that elapses. If there is any question as to whether or not this has been set by the user prior to the current failure, and the backlight enable control voltage measures too low, press a front panel or USB keyboard key and see if the voltage level increases to the expected level.

10. Referring to Figure 2-12, measure the DC voltage from pin #20 of J16 to ground. This is the backlight intensity control line.

    Does the DC voltage on pin #20 measure at least +0.5 VDC?

    If yes:

    Inspect wire harness A1W2 for any damage and replace it if necessary. If the wire harness is fine, replace the A1A3 Touch Screen Display.

    If no:

    Replace the A1A2 Front Panel Controller board.

Initializations Did Not Complete

During the initialization of the Signal Analyzer Application the following messages will be displayed on the application splash screen:

- Checking for required services (1 of 7)
- Initializing License Services (2 of 7)
- Initializing Hardware (3 of 7)
- Initializing Data Services (4 of 7)
- Initializing SCPI Services (5 of 7)
- Initializing Message Services (6 of 7)
- Initializing Front Panel EEPROM Services (7 of 7)

If there is a problem with any of these initializations not completing or causing an error message to be displayed, refer to the instrument Event Log. This can be accessed by using a USB keyboard and mouse and selecting Start, type Run and press Enter. When the Run window comes up, type Eventvwr.exe and press Enter.

Once the Event Viewer comes up, look under Applications and Services Logs, SA for the latest error entries. Select any error events to view further details, which should give you some idea of what the problem is.

Fails an Internal Auto Alignment

If the instrument fails an initial alignment at boot up, see the "When an Alignment Fails" section in Chapter 4, "Internal Alignments," for assistance in determining the cause.

Signal Level Verification

Signal Level Problem with Input Frequencies < 3.6 GHz

Measure the 50 MHz RF calibrator signal level by pressing **Input/Output**, **Input**, **RF Calibrator**, **50 MHz**. Now press **Freq** and input **50 MHz**. Press **Span**, **1 MHz**, and **Peak Search**. If the analyzer is functioning correctly in low band, the 50 MHz calibrator level should be –25 dBm ± 2 dB. See the figure below.

Figure 2-13 50 MHz Calibrator Signal

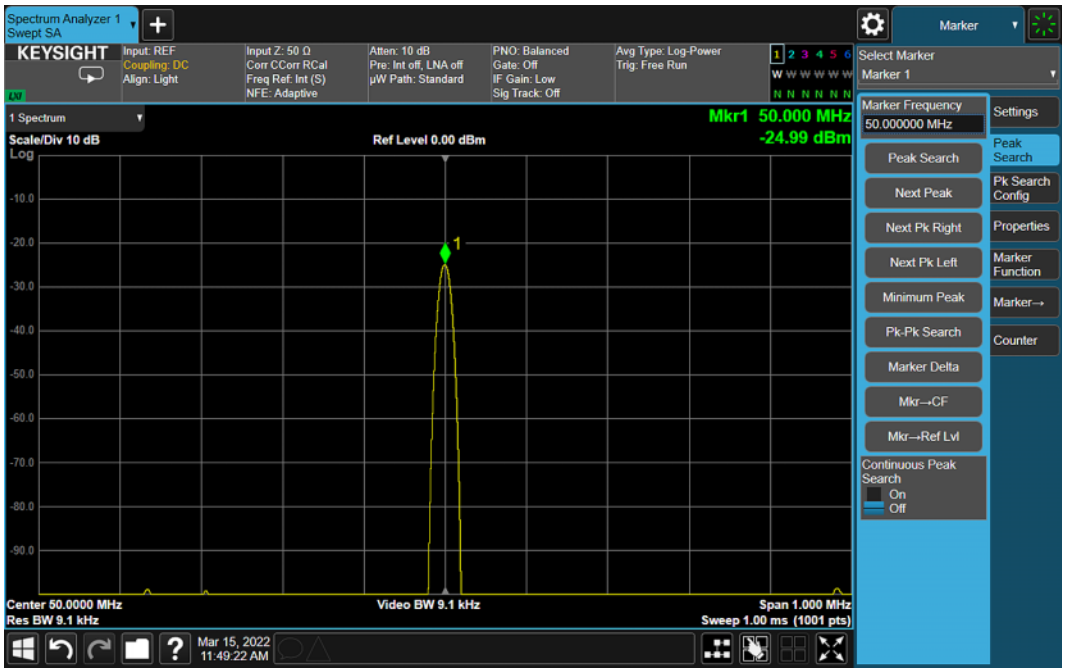

Is the signal level correct?

If yes:

The analyzer low band path is funtioning properly at least at 50 MHz.

If no:

Refer to Chapter 6, “RF Input Section (RF/Microwave),” in this manual.

NOTE

It is possible that other input frequencies < 3.6 GHz could have an amplitude problem even though the 50 MHz calibrator is within tolerance. Using the internal RF calibrator provides a quick check of the low band path.

Signal Level Problem with Input Frequencies > 3.6 GHz

Measure the 4.8 GHz RF calibrator signal level by pressing **Input/Output**, **Input**, **RF Calibrator**, **4.8 GHz**. Now press **Freq** and input **4.8 GHz**. Press **Span**, **1 MHz**, and **Peak Search**. If the analyzer is functioning correctly in high band, the 4.8 GHz calibrator level should be –28 dBm ± 2 dB. See the figure below.

Figure 2-14 4.8 GHz Calibrator Signal

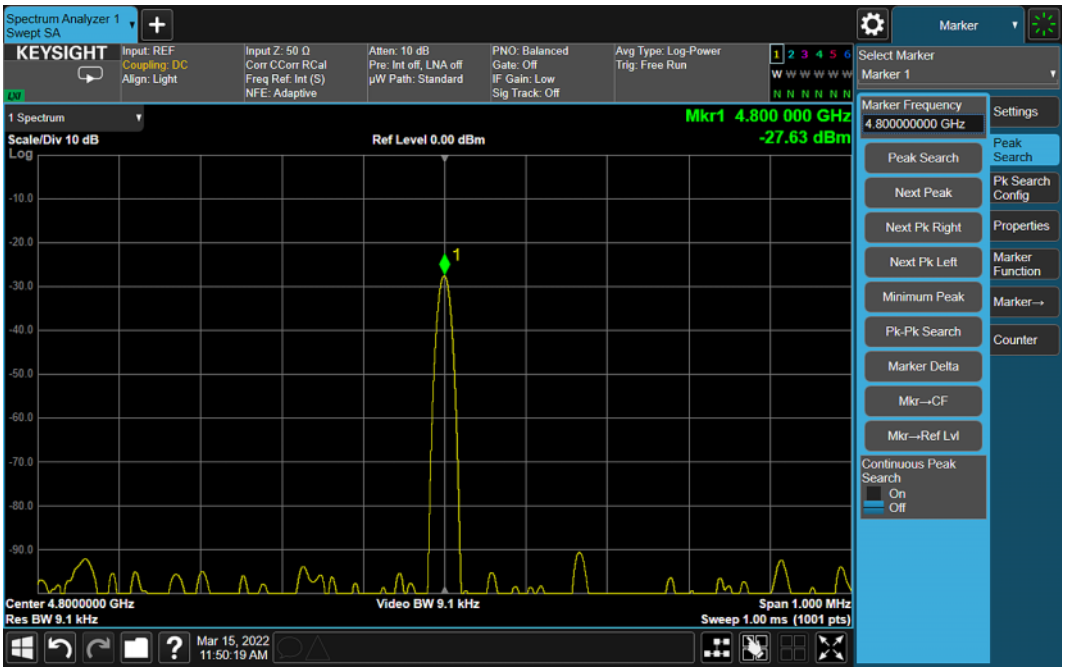

Is the signal level correct?

If yes:

The analyzer high band path is functioning properly at least at 4.8 GHz.

If no:

Press **Amplitude**, **Signal Path**, **Presel Center** to manually center the preselector. Refer to Chapter 6, “RF Input Section (RF/Microwave),” in this manual.

NOTE

It is possible that other input frequencies > 3.6 GHz could have an amplitude problem even though the 4.8 GHz calibrator is within tolerance. Using the internal RF calibrator provides a quick check of the high band path.

3 Instrument Information and Calibration Data

What You Will Find in This Chapter

This chapter provides information on the following:

Instrument Model Number on page 62

Instrument Serial Number on page 63

Instrument Licenses on page 64

License Installation on page 65

Instrument Calibration Database on page 66

Alignment Data Wizard on page 66

Instrument Model Number

The instrument model number is programmed at the factory into secure memory on the A7 Midplane board. The instrument model number is part of the instrument HostID, which is what all instrument licenses are validated against. So, if the model number is not correct, none of the instrument's licensed functionality will be enabled when the instrument application validates licenses at runtime.

When the A7 Midplane board is replaced both the model and serial number will need to be reprogrammed into the instrument.

NOTE

The instrument model number can only be programmed into replacement A7 Midplane boards by connecting them to the Keysight network and contacting the factory product support team for assistance.

The model number of the instrument can be found on the instrument in three places. It is on the front panel nameplate, the rear panel label, and on the System Information screen in the instrument application software, as seen in Figure 3-1.

Figure 3-1 System Information Screen

Keysight Technologies	
Keysight PXA	Keysight PXA Signal Analyzer
Product Number	N9030B
Serial Number	**MY60301234**
S/W Release Name	2024 Update 2.0
Instrument S/W Revision	A.38.09
Revision Date	4/29/2024 3:29:40 PM
Computer System	Windows 10
Computer Name	**K-N9030B-01234**
IP Address	10.81.215.124
IPv6 Address	
Link-Local IPv6 Address	fe80::1586:f724:9735:5605%12
Host ID	**N9030B, MY60301234**
mDNS Enabled	Yes
mDNS Host Name	**K-N9030B-01234**
mDNS Service Name	Keysight N9030B Signal Analyzer - **MY60301234**

Instrument Serial Number

The instrument serial number is programmed at the factory into secure memory on the A7 Midplane board. The instrument serial number is part of the instrument HostID, which is what all instrument licenses are validated against. So, if the serial number is not correct, none of the instrument's licensed functionality will be enabled when the instrument application validates licenses at runtime.

When the A7 Midplane board is replaced both the model and serial number will need to be reprogrammed into the instrument.

NOTE

The instrument serial number can only be programmed into replacement A7 Midplane boards by connecting them to the Keysight network and contacting the factory product support team for assistance.

The instrument serial number is made up of three parts, (1) the country of origin, (2) the serial prefix, (3) sequential serial number, as shown in Figure 3-2.

Figure 3-2 **Example Serial Number Label**

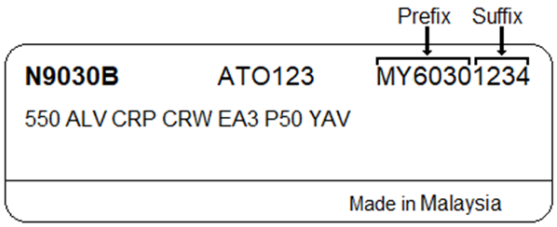

The first two letters designate the country that the instrument was manufactured in:

MY = Malaysia

SG = Singapore

US = United States

The next four numbers are the serial prefix. This is used to designate different factory production runs.

The last four digits are the sequential serial number for the instrument. This number is typically reset whenever the serial prefix changes.

The combination of the country of origin, serial prefix, and sequential serial number provides a unique serial number identifier for each instrument produced.

The serial number of the instrument can be found on the instrument in two places. It is on the rear panel label, and on the System Information screen in the instrument application software, as seen in Figure 3-1.

Instrument Licenses

Instrument licenses are what enable both the standard and option functionality in the instrument, as listed in Table 1-1. These licenses are stored in two places in the instrument, on the A5 disk drive, and in secure memory on the A7 Midplane board as a backup. If one of these assemblies is replaced, the instrument license service will automatically copy all validated licenses from the remaining assembly to the replacement assembly when the instrument powers up.

When an instrument is powered on, the license service validates the licenses it has against the instrument Host ID, which is made up of the instrument model number and serial number separated by a comma, as seen in Figure 3-1. If the instrument model or serial number is not correct for some reason, the Host ID will also not be correct, and all licenses will not be validated. This will happen when the A7 Midplane board is replaced, which will require the instrument model and serial number be programmed into it.

Installed licenses can be viewed from the instrument front panel by selecting System, Show System. They can also be viewed using the Keysight License Manager either built into the instrument or remotely. This can be run from the instrument by selecting System, Licensing, License Manager.

License files are saved on the A5 disk drive at the following location:

C:\Program Files\Agilent\Licensing

The file extension for these files is .lic and they are setup to be opened with notepad for viewing in the instrument. However, most of these files are hidden, and you would need to select to show hidden files to see them. The licenses that are hidden are non-removable.

CAUTION **While the license files can be opened with notepad, there is no valid reason to edit these files, as doing so could easily render them invalid.**

As previously mentioned, most all licenses in the instrument are non-removable, except for measurement applications. If for some reason a non-removable license needs to be removed from an instrument, Keysight factory support will need to be contacted for assistance.

License Installation

The typical way to install a license into an instrument is to place the license file in the root directly of a USB memory device and then insert the device into one of the USB ports of the instrument. Within a few seconds the instrument license service will scan the drive for license files and install ones it finds that are valid for the instrument. After installing a new license, the instrument application will need to be restarted for the licensed functionality to be activated.

Licenses can also be installed by dropping them into the C:\Program Files\Agilent\Licensing folder.

Instrument Calibration Database

Preserving the instrument calibration database when servicing an instrument should be considered a very high priority. Without doing so many needless hours could be spent running adjustments to recreate this database.

The instrument calibration data is saved in a MariaDB database on the A5 Solid State Drive in the AlignmentDataStorage folder on the E:\ partition. However, manually copying, moving, or backing up these files is not recommended or supported.

There is an Alignment Data Wizard in the instrument that is designed to handle the backing up and restoring of the calibration database. There is also dedicated memory in the A4 Processor assembly for calibration database backups. If a backup is needed to be saved to a location outside of the instrument, the wizard will also allow for that.

Alignment Data Wizard

1. To run the Alignment Data Wizard, select **System**, **Alignments**, **Backup / Restore Align Data**...
2. When the Alignment Data Wizard starts, and the instrument application is running, you will see a prompt notifying you that it will first need to shut down the instrument application before it can run, as seen in Figure 3-3. This is so that the instrument application does not try to access the calibration database while it is being backed up or restored. Select **OK** to continue.

Figure 3-3 Alignment Data Wizard - Application Shutdown

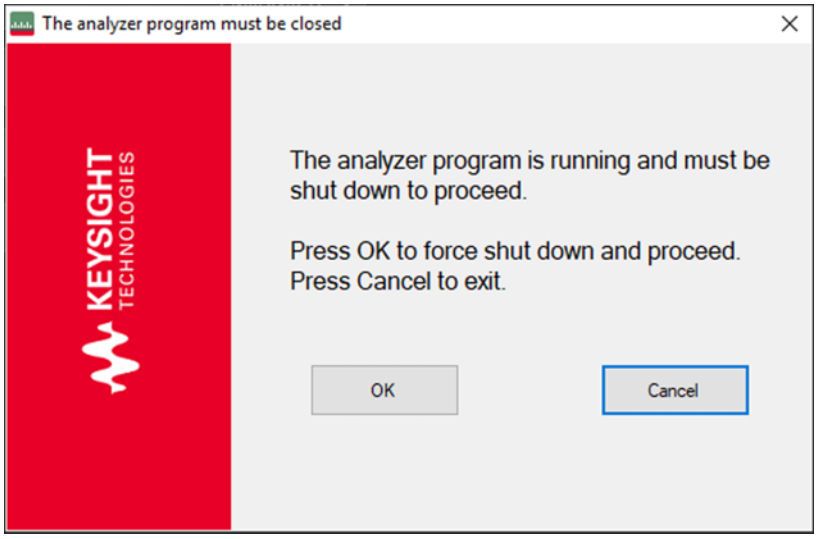

3. Once the instrument application shuts down, the wizard will continue with the prompt seen in Figure 3-4. Select **Next**.

Figure 3-4 Alignment Data Wizard - Welcome

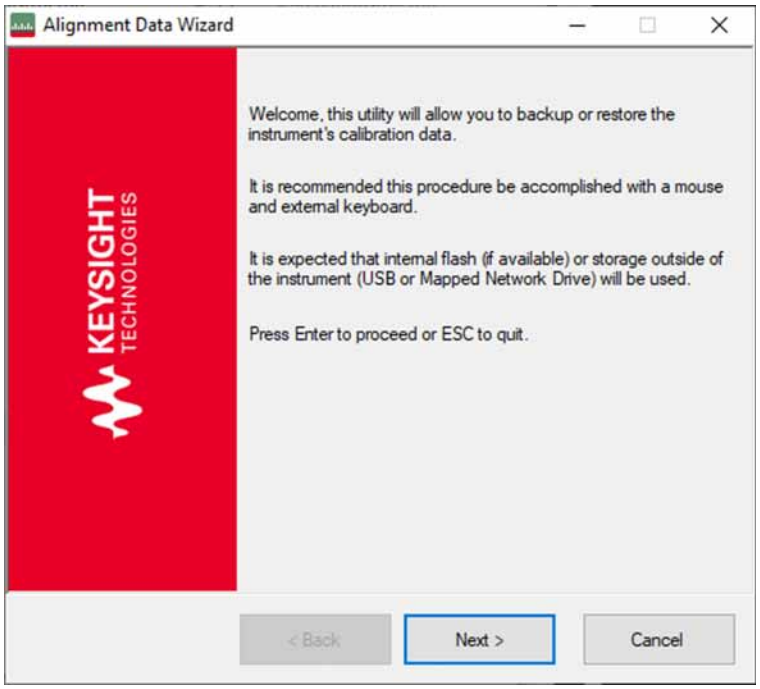

4. You will then be presented with a selection to either Backup or Restore the calibration data, as seen in Figure 3-5. For this exercise select **Backup** and **Next**.

Figure 3-5 Alignment Data Wizard - Select Operation

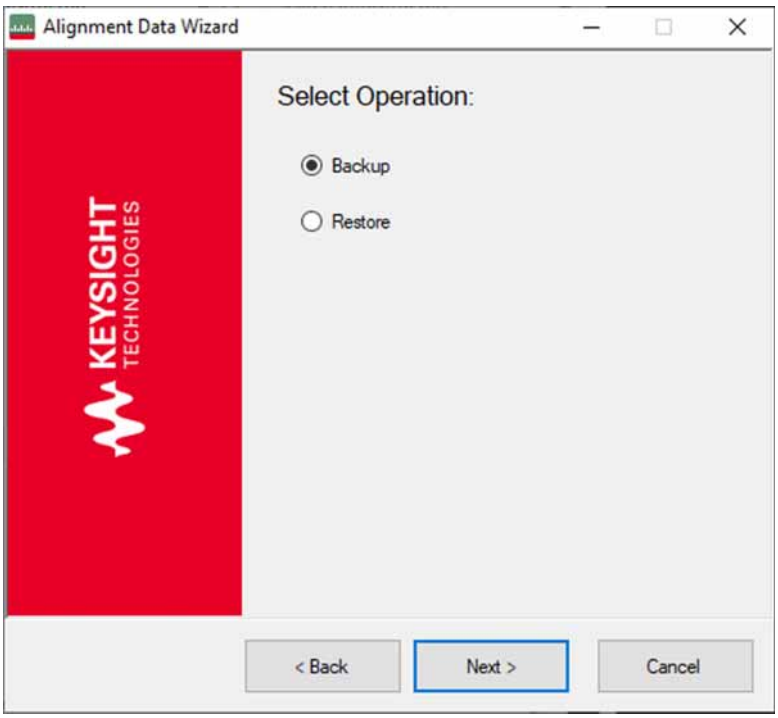

5. You will then need to select a location to backup the calibration database to, as seen in Figure 3-6. If you select Internal Flash, it will backup the database to the dedicated memory on the A4 Processor assembly. If you select External Removable Drive you can then select Browse to select any available location. For this exercise, insert a USB memory device into one of the instrument front panel USB ports, select **External Removable Drive**, Browse to the drive, and select **Save**.

Figure 3-6 Alignment Data Wizard - Backup Location

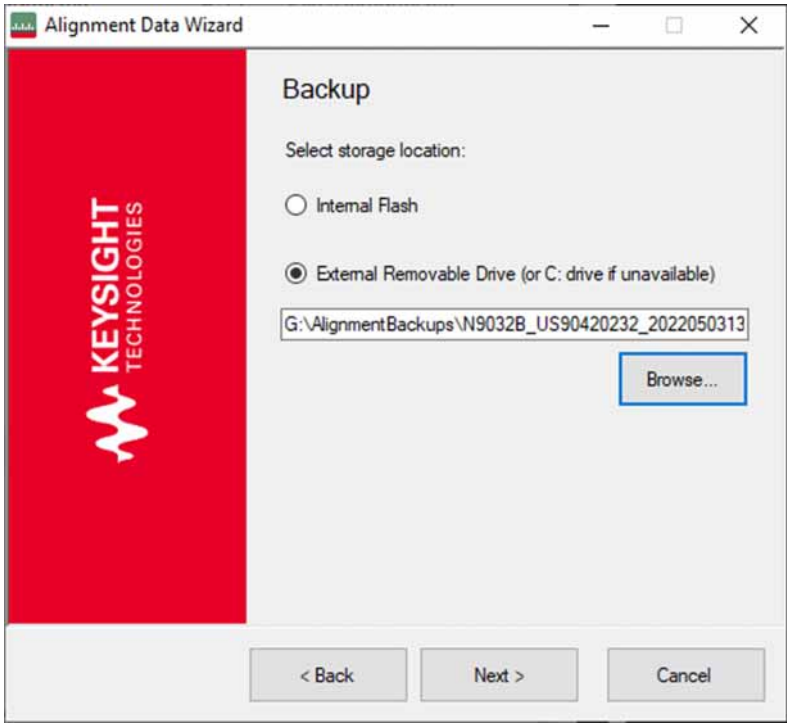

6. You will then need to confirm the Backup operation by selecting **Save**, as seen in Figure 3-7.

Figure 3-7 Alignment Data Wizard - Confirm Save

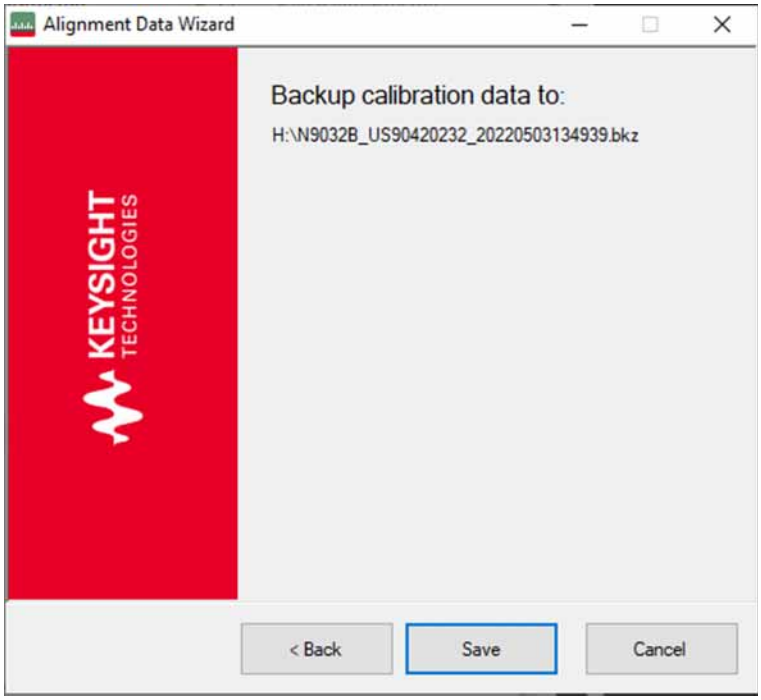

7. Once the backup of the database is complete select **Finish**, as seen in Figure 3-8.

Figure 3-8 Alignment Data Wizard - Completed

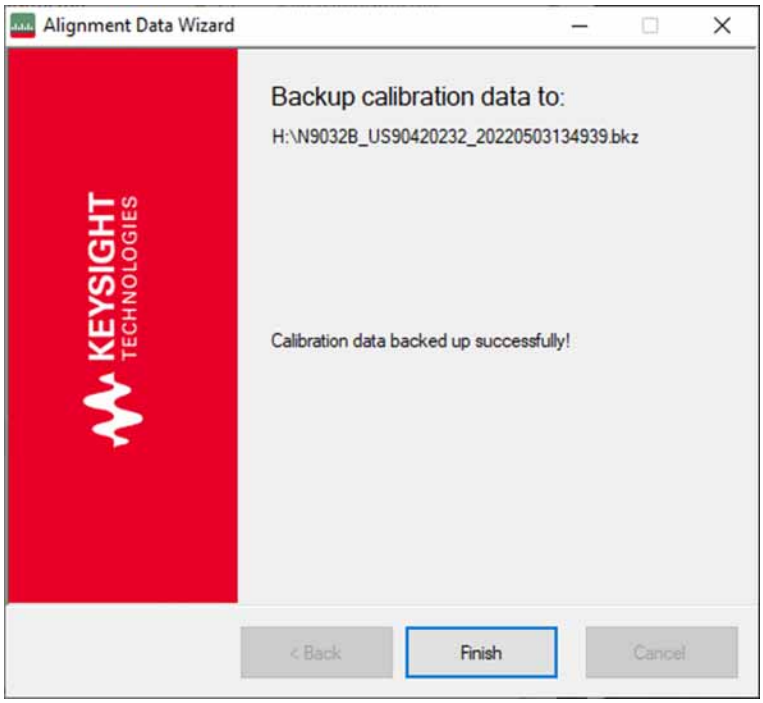

NOTE

If you need to run the Alignment Data Wizard but the instrument application will not run, open windows explorer and navigate to the following folder:

C:\Program Files\Agilent\SignalAnalysis\Infrastructure

and run the following program:

BackupRestoreAlignDataWizard.exe

The calibration database process will create two files, the database backup (.bkz file) and a configuration file (.xml file) that contains current instrument configuration information. Be sure to keep these two files together, as they will both be needed if you want to ever restore the database.

The process for restoring a calibration database is very similar, just follow the on-screen prompts for that.

4 Internal Alignments

What You Will Find in This Chapter

Internal Alignments Overview on page 72
When an Alignment Fails on page 73
Multiple Alignment Failures on page 74
Alignment Descriptions on page 75

Internal Alignments Overview

The instrument has a built-in auto alignment system that is used to keep the accuracy of the instrument within the published specifications. These alignments compensate for circuit drift due to time and temperature changes.

NOTE **While this instrument defaults to the Light setting for Auto Align, the instrument is only guaranteed to meet all its published specifications when it is set to Normal (Auto).**

At instrument power on, an initial alignment is automatically performed. It can also be manually run by pressing **System**, **Alignments**, **Align Now**, **Align Now All**. The power-on alignment performs a few more alignments than the manual Align Now All routine.

There are approximately 60 alignments that the instrument can perform, depending on installed hardware options.

NOTE **The N9030B will either have Option EP1 or EP0 Synthesizer/Reference hardware, and the alignments performed are different. Refer to the "Alignment Descriptions" section for more information.**

When most alignments are run the results are recorded in the alignment history file, which can be used for diagnostic and troubleshooting purposes.

When running alignment be sure that:

1. **There is no RF power applied to the front panel RF input.**
2. **That the instrument is not using an external frequency reference.**

At instrument power on, an initial alignment is automatically performed. It can also be manually run by pressing **System**, **Alignments**, **Align Now**, **Align Now All**.

Each of the alignments has a predetermined time and temperature interval at which they will be run. However, the **Auto Align** setting can either disable them or extend the time and temperature intervals at which they run.

When an Alignment Fails

The first thing that should be done before troubleshooting an alignment failure is to verify that all the instrument power supplies are at the correct level. See the **"Power Supply Verification"** section in **Chapter 5, "First-Look Troubleshooting,"** to verify that all the instrument power supplies are on.

When an alignment fails you can select the alignment message at the bottom of the instrument screen to see the current condition or history, or select the file folder at the bottom of the instrument screen, then File Explorer and navigate to alignment history file at:

E:\AlignDataStorage\AlignmentHistory.txt

Open the file with Notepad and search the file for the word "FAIL". For the most recent alignment history search up from the bottom of the file.

The information in the history file usually shows that multiple measurements are made for a given alignment routine, and measured values with upper and lower limits are saved. For example, the Mechanical Attenuator Algorithm measures and displays all the attenuator step values. In this case, you can view which steps fail, and by how much. Then based on the input attenuator drawing in the block diagram, you can determine which attenuator steps are available on each of the two input attenuators. Then you can view the troubleshooting information for the A15 Front End Controller or deduce from the attenuator steps that fail, which attenuator is faulty.

Multiple Alignment Failures

Finding the cause of multiple alignment failures can be difficult at times. If this is the case, try using the following procedure:

1. Turn auto alignments of by pressing **System**, **Alignments**, **Auto Align**, **Off**.
2. Default the alignment data by pressing **System**, **Alignments**, **Restore Alignment Defaults**.
3. Run all alignments by pressing **Align Now**, **Align Now All**.
4. Open the alignment history file and focus on the first failure for the alignment that was just run.

NOTE

The limits for many of the alignments are such that certain alignments may never fail, even though the returned results are not as expected. So, when looking at the alignment history for complicated failures it will often help to also look at alignments that passed to see if the data for certain conditions might give further indication of a failure trend.

Alignment Descriptions

The following information can be used to understand the workings of the internal alignments. It can also be used when there are multiple alignment failures to see what common settings or signal paths there may be between the failures.

The two tables correspond with the two Enhanced Phase Noise options, EP1 and EP0. Refer to the correct table depending on which option the instrument at hand contains.

Table 4-1 Alignments for Instruments with Option EP1

Alignment Description	Most Probable Hardware Failure	Related Hardware
Main Loop YTO Pretune DAC	A14 Synthesizer	A16 Reference board is not providing correct 100 MHz or 4.8 GHz signals. A20 YTO output power low.
Offset Loop VCO Pretune Alignment	A14 Synthesizer	A16 Reference board is not providing correct 100 MHz or 4.8 GHz signals
VCXO Tuning Curve (Power up alignment only) Measures the tuning voltage for the 100 MHz VCO at a number of different frequencies. Uses internal 10 MHz time base	A16 Reference	
VCXO Loop Bandwidth Adjusts gain of the PLL loop amplifier. Uses the 10 MHz internal reference	A16 Reference	
Second LO Tuning Curve (Power up alignment only) Measures the tune voltage for the 4800 MHz VCO at a number of different frequencies. Uses the 10 MHz internal reference	A16 Reference	
Second LO Loop Bandwidth Adjusts gain of the PLL loop amplifier. Uses the 10 MHz internal reference.	A16 Reference	
Ext Mix LO Alignment Algorithm	A13 Front End Assy	A15 Front End Controller
Dither Level Algorithm (4 measurements)	A3 Digital IF	
AIF LC Wide Prefilter Passband Tuning Algorithm Adjusts the LC prefilter centering with the prefilter BW set to about 1.12 MHz. Uses 322.5 MHz Comb Calibrator on the A-IF.	A2 Analog IF	

Table 4-1 Alignments for Instruments with Option EP1

Alignment Description	Most Probable Hardware Failure	Related Hardware
AIF LC Wide Prefilter Passband Fine Tuning Algorithm	A2 Analog IF	
AIF LC Narrow Prefilter Passband Tuning Algorithm Adjusts the LC prefilter centering with the prefilter BW set to about 413 kHz. Uses 322.5 MHz Comb Calibrator on the A-IF.	A2 Analog IF	
AIF LC Narrow Prefilter Passband Fine Tuning Algorithm	A2 Analog IF	
AIF Xtal Wide Prefilter Passband Tuning Algorithm Adjusts Centering, symmetry and dip of the crystal prefilter BW set to about 80 kHz Uses 322.5 MHz Comb Calibrator on the A-IF	A2 Analog IF	A3 Digital IF or A16 Reference
AIF Xtal Narrow Prefilter Passband Tuning Algorithm Adjusts Centering, symmetry and dip of the crystal prefilter BW set to about 13 kHz Uses 322.5 MHz Comb Calibrator on the A-IF	A2 Analog IF	
AIF Variable Gain Algorithm The Gain of the Analog IF System is measured and compared with the ideal gain value. Several conditions are tested, Dither on/ dither off, A-IF prefilter in and bypassed, alias filter set wide and narrow. Uses 322.5 MHz Comb Calibrator on the A-IF	A2 Analog IF	
AIF Step Gain Algorithm Measures the relative gain of the IF for high gain (10 dB) verses the low gain (0 dB) paths. In normal instrument operation these two states can be controlled by the user interface key called “Swept IF Gain”. Uses the Comb calibrator on the A-IF	A2 Analog IF	
LO Power Alignment Algorithm Measure max LO power then backs off for each band	A13 Front End Assembly or A15 Front End Controller	
AIF Variable Attenuator Algorithm Measures the gain in all settings of the A-IF 1 dB step attenuator. A reference power is measured with atten 4 dB The Comb calibrator on A-IF is used to provide a CW signal.	A2 Analog IF	

Table 4-1 Alignments for Instruments with Option EP1

Alignment Description	Most Probable Hardware Failure	Related Hardware
AIF 140 Variable Gain Alignment Algorithm The 300 MHz CW calibration signal on this WB Analog IF assembly is used. Searches for the DAC value that gives the closest power level to the target level. DAC value 0 gives the highest gain; value 255 gives the lowest gain. (Option B1X)	A25 Wideband A-IF	
Mechanical Attenuator Algorithm Measures the attenuation of all DC coupled, and one AC coupled (10 dB) settings of the RF input attenuators. Reference atten setting is 10 dB	A9 and A10 RF Input Attenuators	50 MHz calibrator on A16 Reference
Electrical Attenuator Algorithm Each setting from 0 to 24 dB in steps of 1 dB is measured. The reference condition is electrical attenuator set to 0 dB and RF input attenuators set to 10 dB. (Option EA3)	A13 Front End	50 MHz calibrator on A16 Reference. Control signals from A15 Front End Controller
Electrical Attenuator Tail Algorithm Attenuation set to 0 dB (Option EA3)	A13 Front End	
LO Nulling Full Alignment Algorithm Looks for optimum I and Q over large range	A13 Front End	
LO Nulling Min Alignment Algorithm Looks for optimum I and Q over small range	A13 Front End	
LO Nulling Full MB Alignment Algorithm MB = medium bandwidth	A13 Front End	
LO Nulling Min MB Alignment Algorithm	A13 Front End	
LO Nulling Full WB Alignment Algorithm WB = Wide Band (Option B1X)	A13 Front End	
LO Nulling Min WB Alignment Algorithm	A13 Front End	
AIF 140 Variable Attenuator Algorithm Ref power at atten 12 dB (Option B1X)	A25 Wide band A-IF	
DIF 40 Variable Attenuator Algorithm Ref power at atten 21 dB	A3 Digital IF	

Table 4-1 Alignments for Instruments with Option EP1

Alignment Description	Most Probable Hardware Failure	Related Hardware
Narrow Band Step Cal Adjustment Alignment Algorithm	Alignment signal originates on A3 D-IF, then goes through A16 Reference through the input attenuators, through A13 Front End, through A2 Analog IF, and back to A3 Digital IF. If Option B1X present, A25 WBAIF switches calibrator signal to A16 Reference.	
Narrow Band Step Cal Alignment Algorithm	A16 Reference A9/A10 Attenuators	
DIF 40 Step Cal Adjustment Alignment Algorithm	Since this is wide band alignment done for 40 MHz BW signal path, A2 Analog IF is not included in the signal path.	
DIF 40 Step Cal Alignment Algorithm		
AIF 140 Step Cal Adjustment Alignment Algorithm (Option B1X)	A25 Wide band A-IF	
AIF 140 Step Cal Alignment Algorithm		
AIF 140 Extended Step Cal Adjustment Alignment Algorithm Extends performance from 140 MHZ to 160 MHz BW (Option B1Y)	A13 Front End assembly switched filter might roll off too much to achieve 160 MHz BW	
AIF 140 Extended Step Cal Alignment Algorithm (Option B1X)		
AIF 140 Extended High Band Switched Filter Removal Algorithm The 4.8 GHz Cal signal is used to provide a High Band signal. (Option B1X)		
DIF 40 High Band Phase Removal Algorithm Uses 4.8 GHz calibrator and Preselector Bypass path. Requires stable YTO.	A3 Digital IF	A16 Reference assy. Preselector Bypass path issue.
DIF 25 High Band Phase Removal Algorithm Uses 4.8 GHz calibrator and Preselector Bypass path. Requires stable YTO.	A3 Digital IF	A16 Reference assy. Preselector Bypass path issue.

Table 4-1 Alignments for Instruments with Option EP1

Alignment Description	Most Probable Hardware Failure	Related Hardware
AIF 140 High Band Phase Removal Algorithm Uses 4.8 GHz calibrator and Preselector Bypass path. Requires stable YTO. (Option B1X)	A25 Wideband A-IF	A16 Reference assy. Preselector Bypass path issue.
AIF 140 Extended High Band Phase Removal Algorithm Uses 4.8 GHz calibrator and Preselector Bypass path. Requires stable YTO. (Option B1X)	A25 Wideband A-IF	A16 Reference assy. Preselector Bypass path issue.
E Cal Path System Gain Algorithm Measures the amplitude error of the low band signal path by injecting the 50 MHz E-Cal signal into the A13 Front End assembly. The E-Cal signal originates on the A16 Reference assembly.	Signal path from A13 Front End to A3 Digital IF	A16 Reference may not be providing 50 MHz E-Cal
Low Band Nominal Path System Gain Algorithm Aligns low band (3 Hz to 3.6 GHz path) with preamp and electronic attenuator OFF. Dependent on successful E-Cal alignment. Input attenuators set to 10 dB and DC coupled.	A13 Front End	50 MHz calibrator on A16 Reference. A9 and A10 Input attenuators
Low Band Preamp Path System Gain Algorithm Aligns low band (3 Hz to 3.6 GHz path) with preamp ON. Input attenuator set to 20 dB. (Options P03, P08, P13, P26, P43, P44, P50)	A13 Front End	50 MHz calibrator on A16 Reference. A9 and A10 Input attenuators
Low Band Elec Atten Path System Gain Algorithm Aligns low band with electronic attenuator in the signal path and set to 0 dB. (Option EA3)	A13 Front End	50 MHz calibrator on A16 Reference. A9 and A10 Input attenuators
Preselector Two Point Tuning Algorithm Aligns the YTF preselector centering near the maximum and minimum frequency points of the YTF. Uses the high band preamp noise as stimulus signal.	A12 YTF Preselector or A15 Front End Controller or All Low Band	A13 Front End
High Band Nominal Path System Gain Algorithm	Anything in Band 1 signal path	4800 MHz calibrator on A16 Reference
Low Noise Path System Gain Algorithm Measures change in signal level with low noise path switched ON and OFF, then computes system gain. (Option LNP)	SW3	4800 MHz calibrator on A16 Reference A15 Front End Controller

Table 4-1 Alignments for Instruments with Option EP1

Alignment Description	Most Probable Hardware Failure	Related Hardware
High Band Preamp Path System Gain Algorithm Measures change in signal level with high band preamp turned ON and OFF. Input attenuator set to 30 dB. (Options P08, P13, P26, P43, P44, P50)	A11 Low Band Switch	4800 MHz calibrator on A16 Reference A9 and A10 Input attenuators A15 Front End Controller
High Band Preselector Bypass Path System Gain Algorithm A12 YTF Preselector is bypassed and amplitude of 4800 MHz calibrator measured. System gain is then computed. (Option MPB)	SW 1 and SW 2, coax switches and cabling	A15 Front End Controller 4800 MHz calibrator on A16 Reference A9 and A10 Input attenuators
High Band Preselector Bypass Preamp Path System Gain Algorithm (Option MPB)	A11 Low Band Switch Preselector Bypass Switch(s)	
Burst Carrier Trigger Curve Fit Algorithm Detects the level of the signal envelope before filtering at the 22.5 MHz IF, and compares that detected level against the trigger threshold DC level.	A2 Analog IF	
DIF 25 Pulse Stretcher Alignment Algorithm	A3 Digital IF	
DIF 40 Pulse Stretcher Alignment Algorithm Adjusts time between trigger and clock signal.	A3 Digital IF	
WBDIF Pulse Stretcher Alignment Algorithm	A26 WBDIF	
DC Offset Alignment Algorithm (Option BBA)	A19 BBIQ Main A18 BBIQ Interface	

Table 4-2 Alignments for Instruments with EP0

Alignment Description	Most Probable Hardware Failure	Related Hardware
DDS Synth Fast Port Skew Training	A14 Synthesizer	
DDS Synth YTO Pretune DAC	A14 Synthesizer	A16 Reference board is not providing correct 100 MHz or 4.8 GHz signals.
VCXO Loop Bandwidth Adjusts gain of the PLL loop amplifier. Uses the 10 MHz internal reference	A16 Reference	
Second LO Loop Bandwidth Adjusts gain of the PLL loop amplifier. Uses the 10 MHz internal reference.	A16 Reference	
Second LO Saw Peak	A16 Reference	
Ext Mix LO Alignment Algorithm	A13 Front End Assy	A15 Front End Controller
AIF 255 ADC Setup Alignment Algorithm	A25 Wide Band Analog IF or A26 Wideband Digital IF.	
AIF 255 ADC Clock Alignment Algorithm	A25 Wide Band Analog IF	
AIF 255 Flex Circuit Cable Test Algorithm	W65 or W66 Flex circuit cable	
Dither Level Algorithm	A3 Digital IF	
AIF LC Wide Prefilter Passband Tuning Algorithm Adjusts the LC prefilter centering with the prefilter BW set to about 1.12 MHz. Uses 322.5 MHz Comb Calibrator on the A-IF.	A2 Analog IF	
AIF LC Wide Prefilter Passband Fine Tuning Algorithm	A2 Analog IF	
AIF LC Narrow Prefilter Passband Tuning Algorithm Adjusts the LC prefilter centering with the prefilter BW set to about 413 kHz. Uses 322.5 MHz Comb Calibrator on the A-IF.	A2 Analog IF	
AIF LC Narrow Prefilter Passband Fine Tuning Algorithm	A2 Analog IF	
AIF Xtal Wide Prefilter Passband Tuning Algorithm Adjusts Centering, symmetry and dip of the crystal prefilter BW set to about 80 kHz Uses 322.5 MHz Comb Calibrator on the A-IF	A2 Analog IF	A3 Digital IF or A16 Reference

Table 4-2 Alignments for Instruments with EP0

Alignment Description	Most Probable Hardware Failure	Related Hardware
AIF Xtal Narrow Prefilter Passband Tuning Algorithm Adjusts Centering, symmetry and dip of the crystal prefilter BW set to about 13 kHz Uses 322.5 MHz Comb Calibrator on the A-IF	A2 Analog IF	
AIF Variable Gain Algorithm The Gain of the Analog IF System is measured and compared with the ideal gain value. Several conditions are tested, Dither on/ dither off, A-IF prefilter in and bypassed, alias filter set wide and narrow. Uses 322.5 MHz Comb Calibrator on the A-IF	A2 Analog IF	
AIF Step Gain Algorithm Measures the relative gain of the IF for high gain (10 dB) verses the low gain (0 dB) paths. In normal instrument operation these two states can be controlled by the user interface key called “Swept IF Gain”. Uses the Comb calibrator on the A-IF	A2 Analog IF	
LO Power Alignment Algorithm Measure max LO power then backs off for each band	A13 Front End Assembly or A15 Front End Controller	
AIF Variable Attenuator Algorithm Measures the gain in all settings of the A-IF 1 dB step attenuator. A reference power is measured with atten 4 dB The Comb calibrator on A-IF is used to provide a CW signal.	A2 Analog IF	
Mechanical Attenuator Algorithm Measures the attenuation of all DC coupled, and one AC coupled (10 dB) settings of the RF input attenuators. Reference atten setting is 10 dB	A9 and A10 RF Input Attenuators	50 MHz calibrator on A16 Reference
Electrical Attenuator Algorithm Each setting from 0 to 24 dB in steps of 1 dB is measured. The reference condition is electrical attenuator set to 0 dB and RF input attenuators set to 10 dB. (Option EA3)	A13 Front End	50 MHz calibrator on A16 Reference. Control signals from A15 Front End Controller
LO Nulling Full Alignment Algorithm Looks for optimum I and Q over large range	A13 Front End	
LO Nulling Min Alignment Algorithm Looks for optimum I and Q over small range	A13 Front End	
LO Nulling Simplex MB Alignment Algorithm	A13 Front End, Uses narrow BW switched filter.	

Table 4-2 Alignments for Instruments with EP0

Alignment Description	Most Probable Hardware Failure	Related Hardware
LO Nulling Simplex WB Alignment Algorithm	A13 Front End, Uses wide BW switched filter.	
Narrowband Step Cal Adjustment Alignment Algorithm	Alignment signal originates on A3 D-IF, then goes through A16 Reference through the input attenuators, through A13 Front End, through A2 Analog IF, and back to A3 Digital IF. If Option B1X present, A25 WBAIF switches calibrator signal to A16 Reference.	
Narrowband Step Cal Alignment Algorithm	A16 Reference A9/A10 Attenuators	
DIF 40 Step Cal Adjustment Alignment Algorithm	Since this is wide band alignment done for 40 MHz BW signal path, A2 Analog IF is not included in the signal path.	A3 Digital IF
DIF 40 Step Cal Alignment Algorithm	See the DIF 40 Step Cal Adjustment Alignment	
DIF 40 Variable Attenuator Algorithm Ref power at atten 21 dB	A3 Digital IF	
RF Presel LO Nulling Full Alignment Algorithm	A13 Front End	Done over full DAC range
RF Presel LO Nulling Min Alignment Algorithm	A13 Front End	Done over narrow DAC range
AIF 255 Variable Attenuator Alignment Algorithm	A25 Wideband Analog IF	Uses 50 MHz calibrator
RF Presel LO Nulling Simplex MB Alignment Algorithm	A13 Front End	
AIF 510 Variable Attenuator Alignment Algorithm	A25 Wideband Analog IF	Uses 50 MHz calibrator
DIF 40 High Band Phase Removal Algorithm Uses 4.8 GHz calibrator and Preselector Bypass path. Requires stable YTO.	A3 Digital IF A15 Front End Controller	A16 Reference assy. Preselector Bypass path issue (probably the switches)
DIF 25 High Band Phase Removal Algorithm Uses 4.8 GHz calibrator and Preselector Bypass path. Requires stable YTO.	A3 Digital IF A15 Front End Controller	A16 Reference assy. Preselector Bypass path issue. (probably the switches)

Table 4-2 Alignments for Instruments with EP0

Alignment Description	Most Probable Hardware Failure	Related Hardware
AIF 255 RF Band 0 Chirp Cal Adjustment Algorithm	Could be interfering external signal or residual. Assure there is no signal at the RF input A25 Wideband Analog IF	Low band path < 3.6 GHz uses internal 1.2 GHz calibrator.
AIF 255 RF Band 0 Chirp Cal Alignment Algorithm	Could be interfering external signal or residual. Assure there is no signal at the RF input A25 Wideband Analog IF	Low band path < 3.6 GHz uses internal 1.2 GHz calibrator.
AIF 500 RF Band 0 Chirp Cal Adjustment Algorithm	Could be interfering external signal or residual. Assure there is no signal at the RF input A25 Wideband Analog IF	
AIF 500 RF Band 0 Chirp Cal Alignment Algorithm	Could be interfering external signal or residual. Assure there is no signal at the RF input A25 Wideband Analog IF	
AIF 500 Phase Alignment Algorithm		
AIF 255 UW Band 1 Chirp Cal Adjustment Algorithm		High band path uses 4.8 GHz calibrator signal.
AIF 255 UW Band 1 Chirp Cal Alignment Algorithm		
AIF 500 UW Band 1 Chirp Cal Adjustment Algorithm		High band path uses 4.8 GHz calibrator signal.
AIF 500 UW Band 1 Chirp Cal Alignment Algorithm		
E Cal Path System Gain Algorithm Measures the amplitude error of the low band signal path by injecting the 50 MHz E-Cal signal into the A13 Front End assembly. The E-Cal signal originates on the A16 Reference assembly.	Signal path from A13 Front End to A3 Digital IF	A16 Reference may not be providing 50 MHz E-Cal
Low Band Nominal Path System Gain Algorithm Aligns low band (3 Hz to 3.6 GHz path) with preamp and electronic attenuator OFF. Dependent on successful E-Cal alignment. Input attenuators set to 10 dB and DC coupled.	A13 Front End	50 MHz calibrator on A16 Reference. A9 and A10 Input attenuators

Table 4-2 Alignments for Instruments with EP0

Alignment Description	Most Probable Hardware Failure	Related Hardware
Low Band Preamp Path System Gain Algorithm Aligns low band (3 Hz to 3.6 GHz path) with preamp ON. Input attenuator set to 20 dB. (Options P03, P08, P13, P26, P43, P44, P50)	A13 Front End	50 MHz calibrator on A16 Reference. A9 and A10 Input attenuators
Low Band Elec Atten Path System Gain Algorithm Aligns low band with electronic attenuator in the signal path and set to 0 dB. (Option EA3)	A13 Front End	50 MHz calibrator on A16 Reference. A9 and A10 Input attenuators
Preselector Two Point Tuning Algorithm Aligns the YTF preselector centering near the maximum and minimum frequency points of the YTF. Uses the high band preamp noise as stimulus signal.	A12 YTF Preselector or A15 Front End Controller or All Low Band	A13 Front End
High Band Nominal Path System Gain Algorithm	Anything in Band 1 signal path	4800 MHz calibrator on A16 Reference
Low Noise Path System Gain Algorithm Measures change in signal level with low noise path switched ON and OFF, then computes system gain. (Option LNP)	SW3	4800 MHz calibrator on A16 Reference A15 Front End Controller
High Band Preamp Path System Gain Algorithm Measures change in signal level with high band preamp turned ON and OFF. Input attenuator set to 30 dB. (Options P08, P13, P26, P43, P44, P50)	A11 Low Band Switch	4800 MHz calibrator on A16 Reference A9 and A10 Input attenuators A15 Front End Controller
High Band Preselector Bypass Path System Gain Algorithm A12 YTF Preselector is bypassed and amplitude of 4800 MHz calibrator measured. System gain is then computed. (Option MPB)	SW 1 and SW 2, coax switches and cabling	A15 Front End Controller 4800 MHz calibrator on A16 Reference A9 and A10 Input attenuators
High Band Preselector Bypass Preamp Path System Gain Algorithm (Option MPB)	A11 Low Band Switch Preselector Bypass Switch(s)	

Table 4-2 Alignments for Instruments with EP0

Alignment Description	Most Probable Hardware Failure	Related Hardware
Burst Carrier Trigger Curve Fit Alignment Algorithm Detects the level of the signal envelope before filtering at the 22.5 MHz IF, and compares that detected level against the trigger threshold DC level.	A2 Analog IF	
DIF 25 Pulse Stretcher Alignment Algorithm	A3 Digital IF	
DIF 40 Pulse Stretcher Alignment Algorithm Adjusts time between trigger and clock signal.	A3 Digital IF	
WBDIF Pulse Stretcher Alignment Algorithm	A26 WBDIF	
Dual DIF Magnitude Cross Trigger Alignment Algorithm	A25 Wideband Analog IF A26/A27 Wideband Digital IF W66 Flex Circuit	
DC Offset Alignment Algorithm (Option BBA)	A19 BBIQ Main A18 BBIQ Interface	

Notes:
NarrowBandIF is the standard 10 MHz IF or the 25 MHz path (B25)

MediumBandIF is the 40 MHz IF path (B40)

WideBandIF is the 255 MHz IF path (B2X)

DualWideBandIF is the 510 MHz IF path (B5X)

Using an external USB keyboard and mouse you can also access the alignment history, which can be found in a text file at:

E:\AlignDataStorage\AlignmentHistory.txt

You will find the most current alignment information at the bottom of this file. Look for the failed alignments and troubleshoot the Related Hardware based on the information provided in Table 4-1 and Table 4-2.

5 First-Look Troubleshooting

What You Will Find in This Chapter

This chapter provides information on the following:

Overview on page 88

Front Panel Troubleshooting on page 89

- Overview on page 89
- Initial Configuration Check on page 90
- Mechanical Attenuator Evaluation on page 95
- A12 Yig Tuned Filter Shape Verification on page 98
- µWave Path Functionality on page 100
- Preamplifier Functionality on page 103
- IF Signal Path Isolation on page 106
- IF Flatness Verification on page 108

Power Supply Verification on page 115

Overview

There are many different levels of troubleshooting that can be performed on these instruments. The nature of the failure or issue reported will often dictate how in-depth the troubleshooting needs to be. Access to assemblies and their ports or test points can also limit or dictate what can realistically be measured or verified. However, this chapter will focus on things that can be done to isolate, or at least narrow down the list of possible failed components with minimal troubleshooting effort.

The first section in the chapter, "Front Panel Troubleshooting", will provide direction on gathering information and troubleshooting the instrument without removing any of the covers, using minimal external test equipment.

The second section, "Power Supply Verification", provides information on how to do a quick check of the internal power supplies, which should be the first thing that is done whenever the instrument outer cover is removed.

The troubleshooting information in this chapter is aimed at performance or functional issues with the instrument. If there is a problem with the instrument not turning on, booting up, loading the instrument application software, the display not working, auto alignments failing and such, see Chapter 2, "Boot Up and Initialization," for those issues.

NOTE

The removal of the instrument outer cover, along with various inner sheet panel parts, will be required to access the internal test ports and cables referenced in the functional verification procedures. If instructions are needed for any of this, see Chapter 18, "Assembly Replacement Procedures."

Front Panel Troubleshooting

Overview

There is much that can be evaluated about the instrument from pressing keys on the front panel, without taking any of the covers off, and without any other test equipment connected to the instrument. The following will be covered in this section:

- Initial Configuration Check
- Mechanical Attenuator Evaluation
- A12 Yig Tuned Filter Shape Verification
- µWave Signal Path Functionality
- Preamplifier Functionality
- IF Signal Path Isolation
- IF Flatness Verification

Initial Configuration Check

The first thing that should be checked when the instrument is not functioning properly is that all the required hardware assemblies in the instrument are being recognized and configured by the instrument software. To do this press **System**, **Show Hardware** and review the list of assemblies that are listed on the Hardware Information screen. The list should include all the assemblies shown in Figure 5-1.

Figure 5-1 Hardware Information Screen Contents

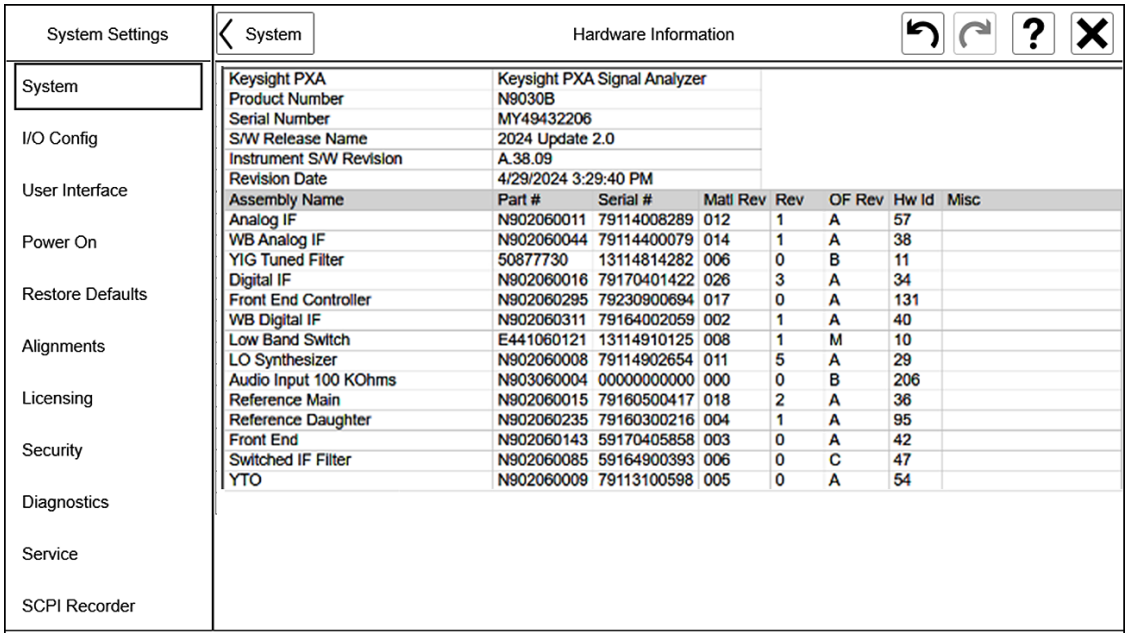

Keysight PXA	Keysight PXA Signal Analyzer						
Product Number	N9030B						
Serial Number	MY49432206						
S/W Release Name	2024 Update 2.0						
Instrument S/W Revision	A.38.09						
Revision Date	4/29/2024 3:29:40 PM						
Assembly Name	Part #	Serial #	Matl Rev	Rev	OF Rev	Hw Id	Misc
Analog IF	N902060011	79114008289	012	1	A	57	
WB Analog IF	N902060044	79114400079	014	1	A	38	
YIG Tuned Filter	50877730	13114814282	006	0	B	11	
Digital IF	N902060016	79170401422	026	3	A	34	
Front End Controller	N902060295	79230900694	017	0	A	131	
WB Digital IF	N902060311	79164002059	002	1	A	40	
Low Band Switch	E441060121	13114910125	008	1	M	10	
LO Synthesizer	N902060008	79114902654	011	5	A	29	
Audio Input 100 KOhms	N903060004	00000000000	000	0	B	206	
Reference Main	N902060015	79160500417	018	2	A	36	
Reference Daughter	N902060235	79160300216	004	1	A	95	
Front End	N902060143	59170405858	003	0	A	42	
Switched IF Filter	N902060085	59164900393	006	0	C	47	
YTO	N902060009	79113100598	005	0	A	54	

The only possible exception to the list of installed hardware assemblies would be the optional A21 Wideband Analog IF and the A22/A23 Wideband Digital IF assemblies.

For a definition of the difference assembly names used in the Hardware Information screen as well as dependencies there might be for each assembly, see Table 5-1.

Table 5-1 Hardware Information Definitions and Dependencies

Assembly Name	Reference Designation	Dependant On
Analog IF	A2 25 MHz Analog IF	--
WB Analog IF	A21 Wideband Analog IF	--
Digital IF	A3 40 MHz Digital IF	--
Front End Controller	A15 Front End Controller	--
WB Digital IF	A22/23 Wideband Digital IF	--
Low Band Switch	A11 Band Switch	A15 Front End Controller
LO DDS Synthesizer	A14 DDS LO Synthesizer	--
LO DDS Reference	A14A1 DDS LO Reference	A14 DDS LO Synthesizer
Reference Plus Main	A16 Reference	--
Reference Plus Daughter	A16A1 Reference Daughter	A16 Reference
FrontEnd	A13A1 Downconverter	A15 Front End Controller
Switched IF Filter	A13A2 Switched IF Filter	A15 Front End Controller
YIG Tuned Filter	A12 Yig Tuned Filter	A15 Front End Controller
YTO	A21 Yig Tuned Oscillator	A14 DDS LO Synthesizer

If an assembly is dependent on another assembly, it will not show up on the Hardware Information screen if the assembly it is dependent on is not listed. For example: The A12 Yig Tuned Filter is dependent on the A15 Front End Controller. If the A12 Yig Tuned Filter does not show up in the list, be sure to verify that the A15 Front End Controller is on the list before assuming that the A12 Yig Tuned Filter has the problem.

If any hardware assembly is missing from the list, that will be a good place to start when isolating a problem. See the chapter in this manual that relates to that assembly for more information on determining why it is not being identified.

The instrument System Information screen should also be evaluated. It includes a wide variety of information about the instrument, including the model and serial number the instrument thinks it is, as well as the firmware version, IP address, options installed, etc... Access this screen by pressing **System**, **Show System**. This screen will resemble Figure 5-2.

Figure 5-2 System Information Screen Contents

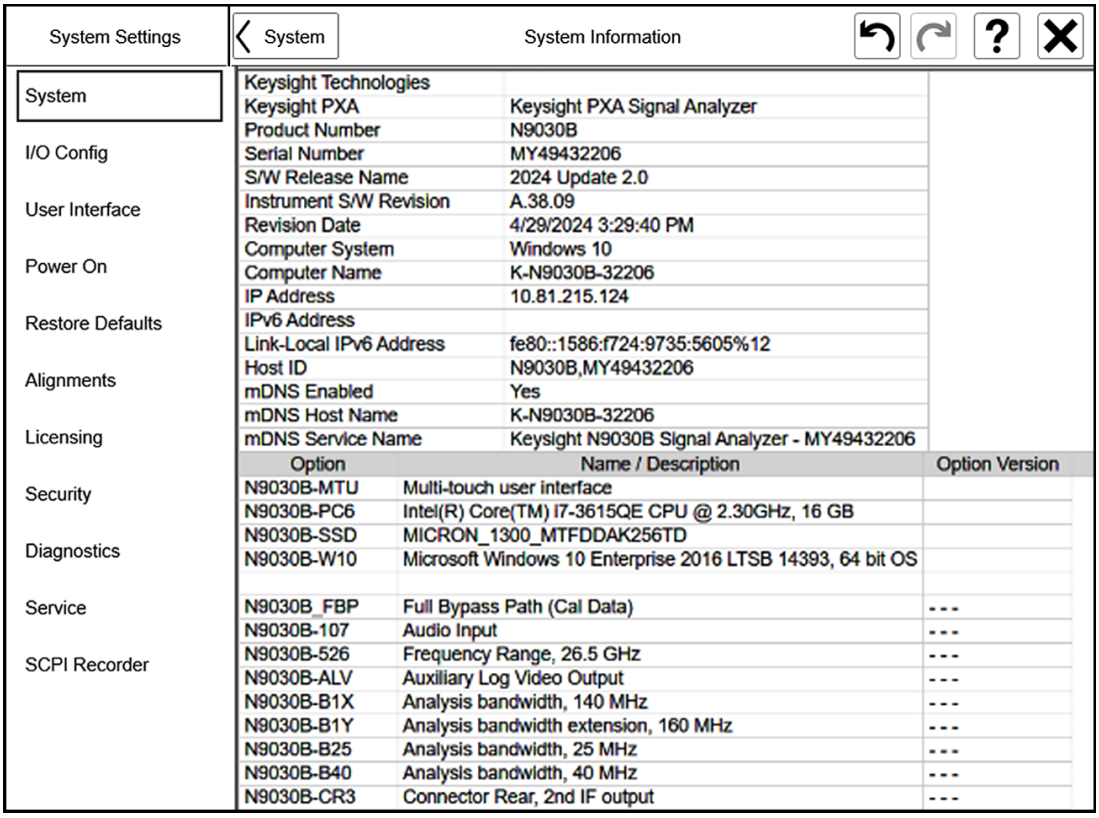

Some of the important things to verify on this screen are the model and serial number to make sure that they match the serial number label on the rear panel of the instrument. If either of these are incorrect there could be a lot of different problems with the instrument, especially with the licensing of all standard and optional hardware and software. If either of these is not correct, see Chapter 3, “Instrument Information and Calibration Data,” for information on how to resolve that issue.

Verify that the Instrument S/W Revision is one that is supported by this model instrument. A list of valid software versions for this instrument can be found in the software revision history file found on the software download web page at:

https://www.keysight.com/find/uxa_software

You will also want to verify that the installed operating system matches the rear panel operating system certificate of authenticity, as the user could have installed something different, which could cause many different issues.

Verify that there are licenses for the options listed on the rear panel serial number label as well as any others that it is entitled to. While all option licenses are important to have configured properly, there are some that are of particular interest, as the instrument will not function at all without them. These would be the following:

- Frequency Range – 503, 508, 513, 526, 544, or 550
- Analysis Bandwidth – B25, B40, B85, B1X, B2X, B5X, or H1G
- Spectrum Analyzer and IQ Analyzer Applications – N9060ES1E

If there is a user complaint about any particular functionality of the instrument you would also want to be sure that any license related to it is also installed. For a complete list of options that are standard in all instruments, see "Instrument Option Descriptions" in Chapter 1, "Overview."

If there are any issues with the configuration of the instrument interface, either from the front panel or remotely, try defaulting the instrument configuration settings from the **System**, **Restore Defaults** menu.

The Hardware Statistics screen should also be looked at to see what kind of use the instrument has seen. This is found by pressing **System**, **Diagnostics**, **Show Hardware Statistics**, as seen in Figure 5-3.

Figure 5-3 Hardware Statistics Screen Contents

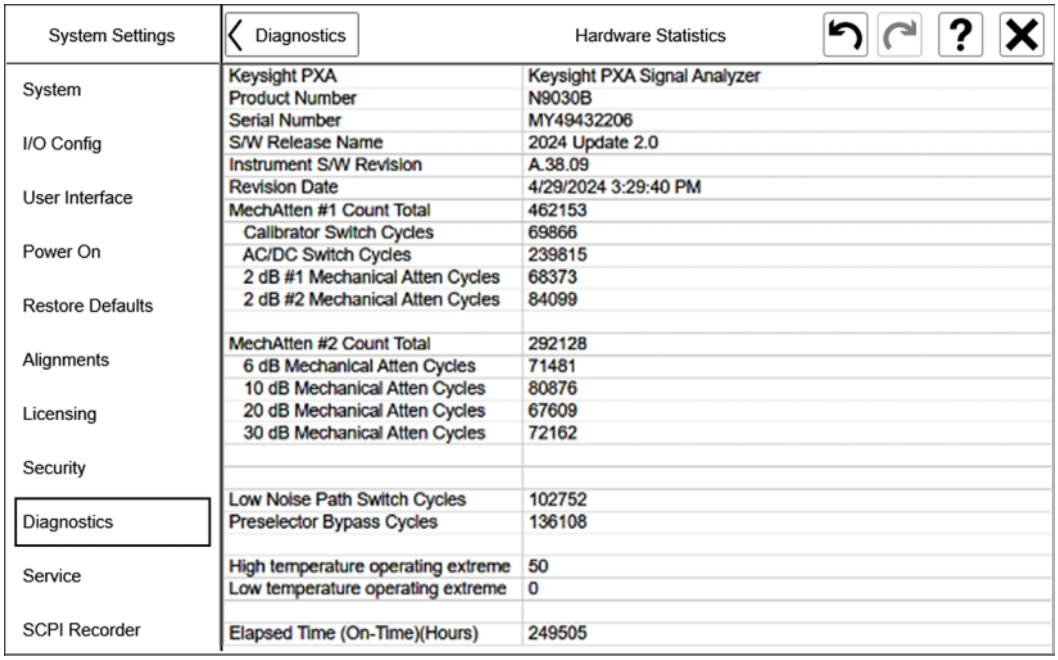

The things to look for on this screen would be the number of mechanical attenuator and switch cycles. Both have a typical life expectancy of 5 million cycles. This would normally take many years for them to reach this under normal use. But no matter if they are used at a normal rate or not, if they are nearing that number, it might be time to change them even if they are not failing.

The temperature operating extremes is also something to take note of. Of course, these are internal temperatures in degrees Celsius. The values for this seen in Figure 5-3 would be typical for normal room temperature operation.

The elapsed time is also something to take note of. An instrument that is powered on eight hours a day, five days a week, fifty-two weeks per year would be on for approximately 2,000 hours per year.

If there is some sort of an alignment data issue it might also be a good idea to either restore a recent alignment data backup, or to default the auto alignment data. Both options can be found on the **System**, **Alignments** screen, as seen in Figure 5-4.

Figure 5-4 Alignments Screen Contents

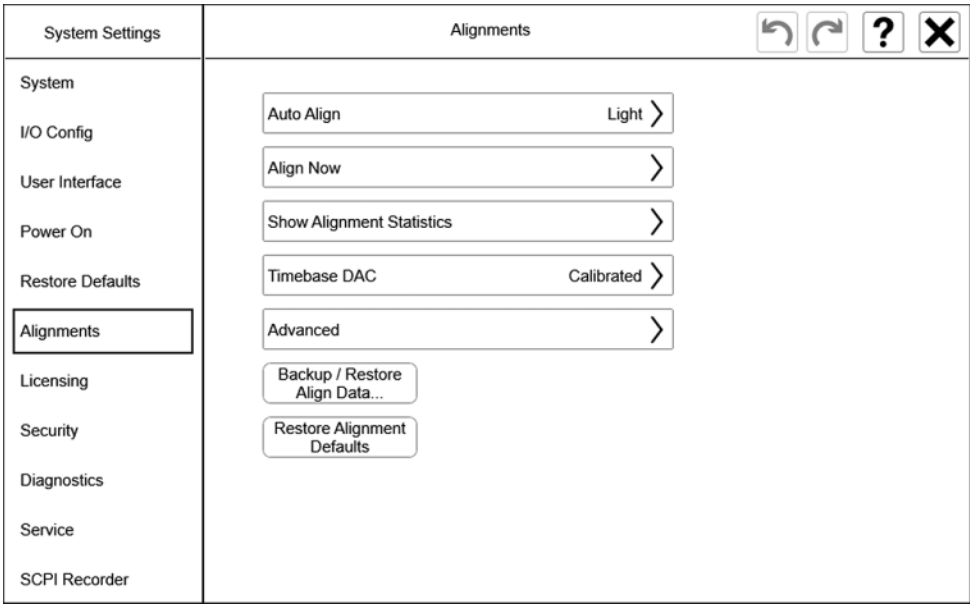

Mechanical Attenuator Evaluation

Whenever one of the mechanical step attenuators changes its attenuation value the power level out of the attenuator should obviously change by the amount of change made. Of course, the user of the instrument does not want to see the onscreen power level of the signal change. This change in signal level is made up for much further along in the signal path. However, when the attenuation value used increases, the signal-to-noise ratio will decrease. This can be used to evaluate the functionality of the attenuator and the corrections applied for it.

This procedure uses a frequency of 6 GHz, but any frequency of interest could be used.

1. Return the instrument to a known state by pressing **Mode Preset.**
2. Connect a signal generator to the instrument input and tune it to 6 GHz with a power level of -10 dBm.
3. Tune the center frequency of the instrument to 6 GHz by pressing **Frequency**, **Center Frequency 6 GHz**.
4. Set the span to 10 MHz by pressing **Span 10 MHz**.
5. There should now be a signal at the center of the display at approximately -10 dBm.
6. Set the mechanical attenuators to 70 dB by pressing **Amplitude**, **Attenuation**, **Mech Atten 70 dB**.
7. Set the attenuator step size to 10 dB by setting **Mech Atten Step** to **10 dB**.
8. Turn on trace averaging by pressing **Trace**, **Trace Type**, **Trace Averaging**.
9. Turn the display line on by pressing **Display**, **Display Line On**.
10. Adjust the **Display Line** level to put the line at the same level as the signal at the center of the screen.
11. Turn the marker on and place it at the first vertical graticule from the right side of the screen by pressing **Marker** and then the **Up Arrow** four times.
12. Activate the marker delta function by pressing **Marker Mode**, **Delta**.
13. Return to the attenuator control menu by pressing **Amplitude**, **Attenuation**.
14. The screen should now look like Figure 5-5.

Figure 5-5 Mechanical Attenuation Evaluation Setup

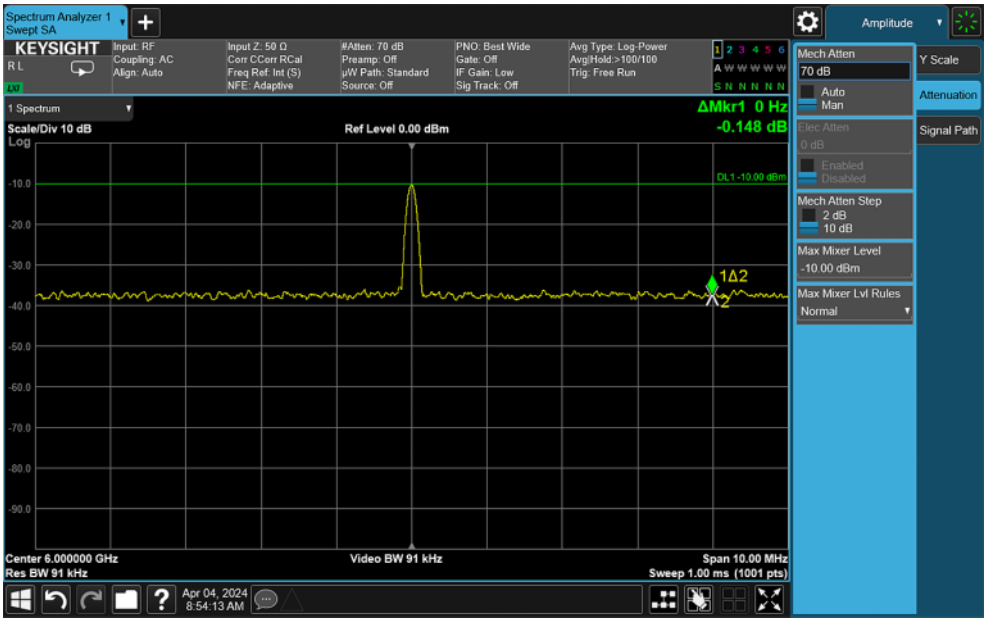

15. Use the **Down Arrow** key to decrease the **Mech Atten** setting in 10 dB steps and watch the level of the signal to verify that it does not vary from the display line by much, while also monitoring the marker delta level on the noise to see that it changes by approximately the same amount that the attenuator value does, as can be seen for a 40 dB change in Figure 5-6.

Figure 5-6 Mechanical Attenuator – 40 dB Change

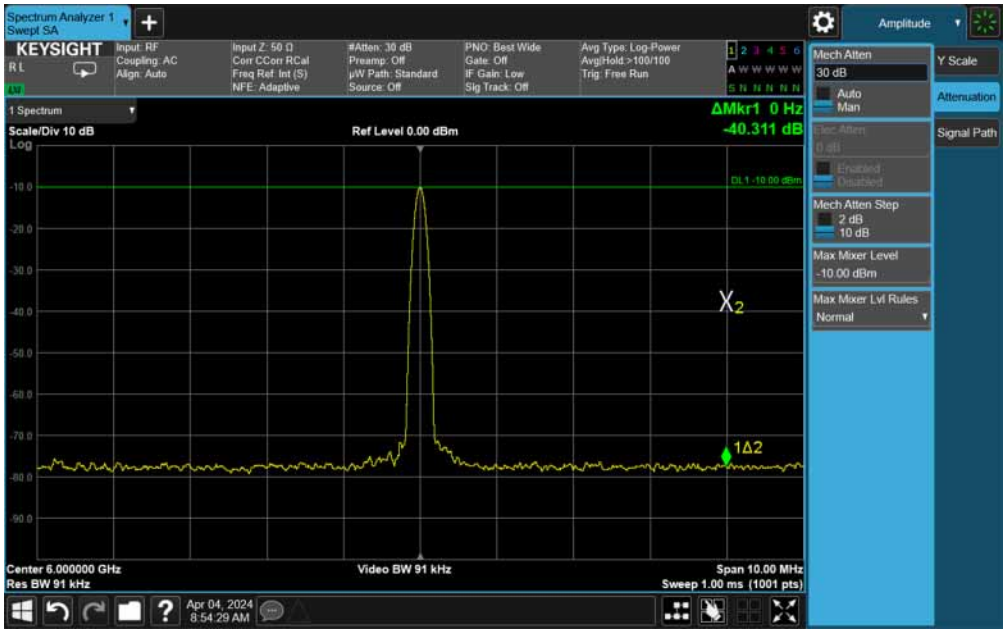

If the signal stays at the same level and the noise floor reduces at the same rate as the attenuation changes, it would indicate that the A10 Step Attenuator is stepping at the correct amount and the corrections are compensating for it accordingly.

NOTE There is no need to go all the way down to 0 dB of attenuation as this will overload the instrument input and the phase noise of the signal will not allow the noise floor to go low enough to see the difference in corrections.

16. Set the attenuator back to 70 dB by pressing **Mech Atten 70 dB**.
17. Change the attenuator step size to 2 dB by setting **Mech Atten Step** to **2 dB**.
18. Use the **Down Arrow** key to decrease the **Mech Atten** setting in 2 dB steps and watch the level of the signal to verify that it does not vary from the display line by much, while also monitoring the marker delta level on the noise to see that it changes by approximately the same amount that the attenuator value does, as can be seen for a 6 dB change in Figure 5-7.

Figure 5-7 Mechanical Attenuator – 6 dB Change

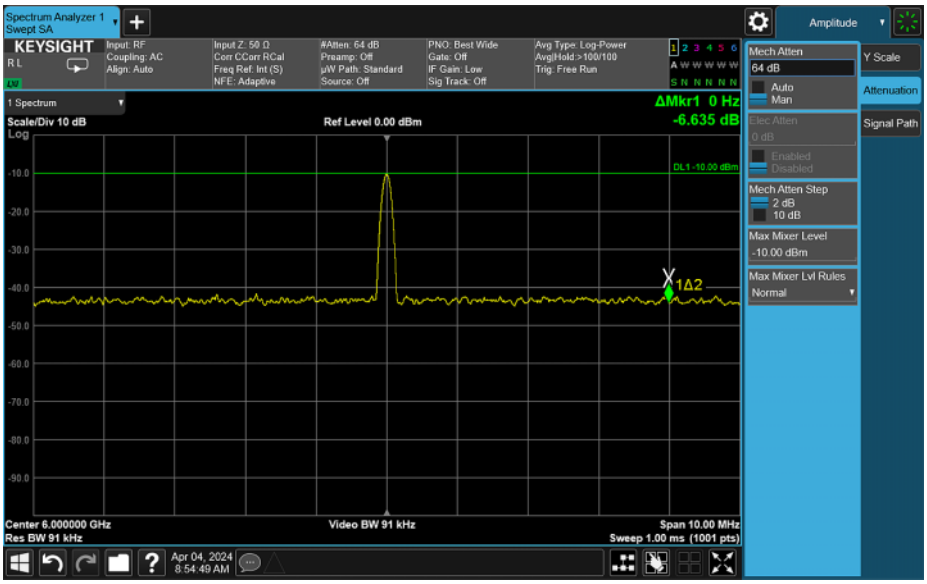

If the signal stays at the same level and the noise floor reduces at the same rate as the attenuation changes, it would indicate that the A9 Step Attenuator is stepping at the correct amount and the corrections are compensating for it accordingly.

19. If there is any problem found with the levels in this attenuator evaluation, see the appropriate RF Section Troubleshooting chapter to determine what the problem is.

A12 Yig Tuned Filter Shape Verification

If the shape of the A12 Yig Tuned Filter has changed for some reason and is no longer as expected, it can cause a variety of issues with the instrument. However, we would not want to replace a suspected detuned filter without knowing for sure that the shape is not correct. The following procedure will display the shape of the filter on the instrument display with no additional equipment needed. This procedure will use a frequency of 6 GHz, but any frequency of interest higher than 3.6 GHz can be used.

1. Switch the instrument to the IQ Analyzer mode by selecting **Mode/Meas**, **IQ Analyzer**, **OK**.
2. Return the instrument to a known state by pressing **Mode Preset**.
3. Connect a signal generator to the instrument input and tune it to 6 GHz with a power level of -10 dBm.
4. Tune the center frequency of the instrument to 6 GHz by pressing **Frequency**, **Center Frequency 6 GHz**.
5. Set the span to 100 MHz by pressing **Span 100 MHz**.
6. Change the reference level to -10 dBm by pressing **Amplitude**, **Ref Value -10 dBm**.
7. Set the scale per division to 3 dB by pressing **Scale/Div 3 dB**.
8. Since the IQ Analyzer will bypass the A12 Yig Tuned Filter by default, press **Signal Path**, **µW Path Control**, **Standard Path** to make sure it is not bypassed.
9. The following error message will appear at the bottom of the display, which can be ignored:

   Settings Alert; Presel/Meas BW conflict

10. Center the filter by pressing **Presel Center**.

    The **Presel Adjust** value that is returned after centering the preselector will give a good indication on how well the preselector characterization is. If it's more than a few MHz the Characterize Preselector routine should be run by pressing **System**, **Alignments**, **Advanced**, **Characterize Preselector**.

11. Change the average type to maximum by pressing **Meas Setup**, **Avg Type Maximum**.

12. Slowly vary the frequency of the signal generator ±50 MHz to draw the A12 YIG Tuned Filter shape on the display, as seen in Figure 5-8.

NOTE

The IQ Analyzer application Complex Spectrum measurement has two displays by default – Spectrum and IQ Waveform. Double-tapping in the Spectrum display will maximize that display and hide the IQ Waveform display, making this measurement easier to evaluate, as seen in Figure 5-8.

Figure 5-8 A12 YIG Tuned Filter Shape - 20 GHz

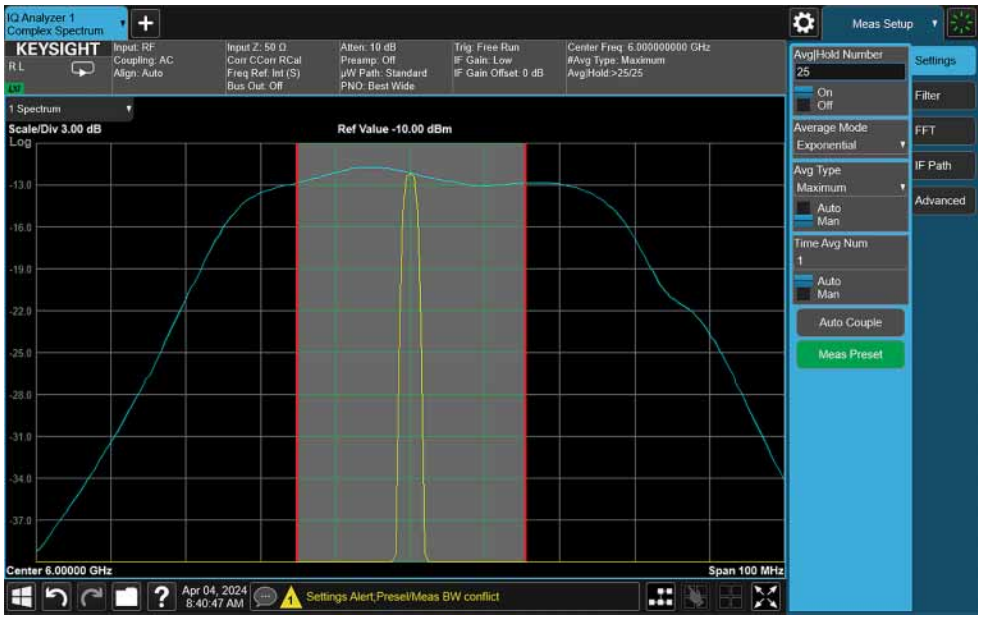

13. The passband filter shape should have no more than 4 dB of peak-to-peak variation within ±15 MHz of the tuned frequency, as seen in the shaded area of Figure 5-8.

    If the peak-to-peak variation within the ±15 MHz area is greater than expected, but the filter passband is not centered in the display, causing the variation to be greater than expected, the passband centering will need to be adjusted by pressing **System**, **Alignments**, **Advanced**, **Characterize Preselector**.

    If the peak-to-peak variation within the ±15 MHz area is greater than expected, and the filter passband is centered in the display, the A12 Yig Tuned Filter will need to be replaced.

µWave Path Functionality

There are a few different signal paths through the front end of the instrument. If there is a problem getting a signal through the instrument, switching through the different microwave signal paths could quickly identify which signal paths might have a problem, and help to isolate the problem to an assembly or component. The following procedure will do this at a frequency of 6 GHz, but any frequency higher than 3.6 GHz could be used.

1. Verify that the instrument is using the spectrum analyzer mode by pressing **Mode/Meas**, **Spectrum Analyzer**, **OK**.
2. Return the instrument to a known state by pressing **Mode Preset**.
3. Connect a signal generator to the instrument input and tune it to 6 GHz with a power level of -10 dBm.
4. Tune the center frequency of the instrument to 6 GHz by pressing **Frequency**, **Center Frequency 6 GHz**.
5. Set the span to 10 MHz by pressing **Span 10 MHz**.
6. Make sure that the instrument is using the **Standard** path by pressing **Amplitude**, **Signal Path** and verify that the **µWave Path Control** says **Standard Path**, as seen in Figure 5-9.

Figure 5-9 µWave Path Control - Standard Path

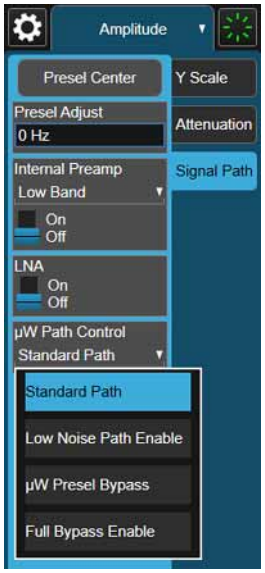

7. There should now be a signal at the center of the display at approximately -10 dBm, as seen in Figure 5-10.

   If the signal is there, but at a lower power level, try centering the A12 Yig Tuned Filter by pressing **Amplitude**, **Signal Path**, **Presel Center**. If the signal level comes up to the expected level, note the **Presel Adjust** value.

If it's more than a few MHz the Characterize Preselector routine should be run by pressing **System**, **Alignments**, **Advanced**, **Characterize Preselector**.

Figure 5-10 µWave Signal Paths - Standard Path

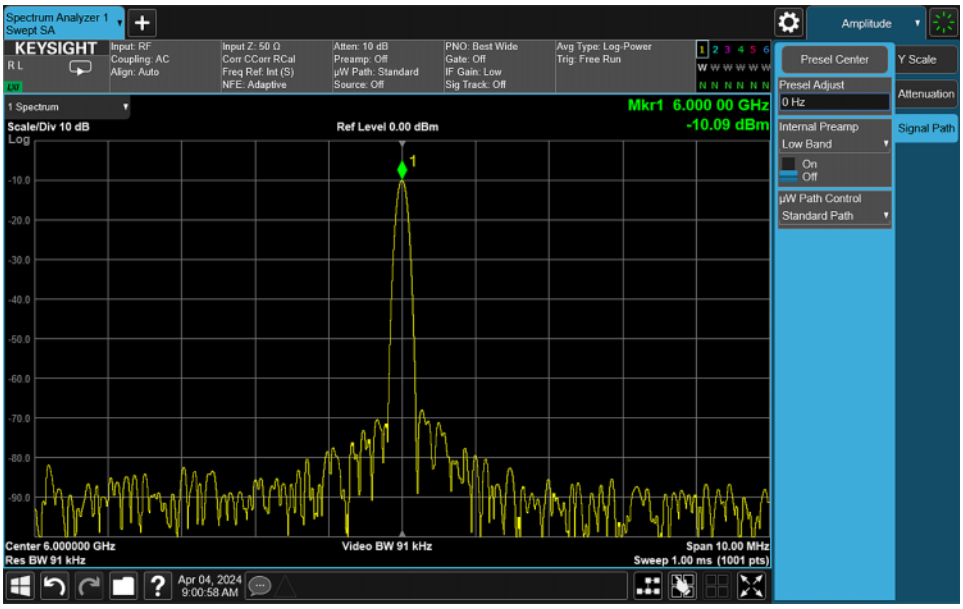

8. Make a note of whether there is a signal at the expected level or not for the Standard path and proceed to the next step.
9. Bypass the A11 Band Switch by pressing **Amplitude**, **Signal Path**, **µWave Path Control**, **Low Noise Path Enable**.
10. There should be a signal at the center of the display at approximately -10 dBm.

    If there was previously no signal seen through the Standard path, but there is now through the Low Noise Path, there is most likely a problem with the A11 Band Switch, or the control of it. See the appropriate RF Section Troubleshooting chapter to determine why there is a problem with the A11 Band Switch.

    If there was previously a signal seen through the Standard path, but now there is no signal through the low noise path, there is most likely a problem with the SW3 LNP Switch, or the control of it. See the appropriate RF Section Troubleshooting chapter to determine why there is a problem with the SW3 LNP Switch.
11. Bypass the A12 Yig Tuned Filter by pressing **Amplitude**, **Signal Path**, **µWave Path Control**, **µW Presel Bypass**.
12. There should be a signal at the center of the display at approximately -10 dBm.

If there was previously no signal seen through the Standard path, but there is now through the µW Presel Bypass path, there is most likely a problem with the A12 Yig Tuned Filter, or the control of it. See the appropriate RF Section Troubleshooting chapter to determine why there is a problem with the A12 Yig Tuned Filter.

If there was previously a signal seen through the Standard path, but now there is no signal through the µW Presel Bypass path, there is most likely a problem with the MPB Switch, or the control of it. See the appropriate RF Section Troubleshooting chapter to determine why there is a problem with the MPB Switch.

13. If it was found that only one of the microwave signal paths has a problem, follow the instructions given to resolve that issue.

If all the microwave signal paths appear the same, either good or bad, see the "IF Signal Path Isolation" section for further fault isolation.

Preamplifier Functionality

There are two different preamplifiers in the instrument, both of which are available with any of the preamplifier options. They are the low band preamplifier on the A13 RF Front End and the high band preamplifier on the A11 Band Switch. Both of these have a specified frequency range that they operate within, as seen in Table 5-2.

Table 5-2 Preamplifier Specified Frequency Ranges and Typical Gain

Preamplifier	Specified Frequency Range		Typical Gain
	Minimum	Maximum	
Low Band	100 kHz	3.6 GHz	20 dB
High Band	3.6 GHz	Instrument Max Frequency	30 dB

When one of the preamplifiers is turned on, the signal level on-screen should not change, while the noise floor level should decrease. However, it might not appear this way at first glance, as turning on one of the preamplifiers also increases the input attenuation considerably by default. The following procedure will use two different frequencies to verify the functionality of the preamplifiers, 2 GHz in low band and 6 GHz in high band, but any frequencies of interest could also be used.

1. Verify that the instrument is using the spectrum analyzer mode by pressing **Mode/Meas**, **Spectrum Analyzer**, **OK**.
2. Return the instrument to a known state by pressing **Mode Preset**.
3. Connect a signal generator to the instrument input and tune it to 2 GHz with a power level of -30 dBm.
4. Tune the center frequency of the instrument to 2 GHz by pressing **Frequency**, **Center Frequency 2 GHz**.
5. Set the span to 50 MHz by pressing **Span 50 MHz**.
6. Set the reference level to -30 dBm by pressing **Amplitude**, **Ref Level -10 dBm**.
7. Set the input attenuator to 20 dB by pressing **Attenuation**, **Mech Atten 20 dB**.
8. Change trace 1 to averaging by pressing **Trace**, **Trace Type**, **Trace Average**.
9. Turn trace 2 on by pressing **Select Trace**, **Trace 2**, **Trace Type**, **Trace Average**.
10. Allow the **Avg/Hold** to reach 100 then stop the trace 2 acquisition by pressing **View/Blank**, **View**.

11. Turn the marker on and place it at the first vertical graticule from the right side of the display by pressing **Marker** and then the **Up Arrow** four times.
12. Activate the marker delta function by pressing **Marker Mode**, **Delta**.
13. Turn the low band preamplifier on by pressing **Amplitude**, **Signal Path**, **Internal Preamp**, **Low Band**, **On**.
14. The signal level should remain the same while the noise floor at the marker should drop by approximately 10 dB, as seen in Figure 5-11.

Figure 5-11 Low Band Preamplifier On and Off

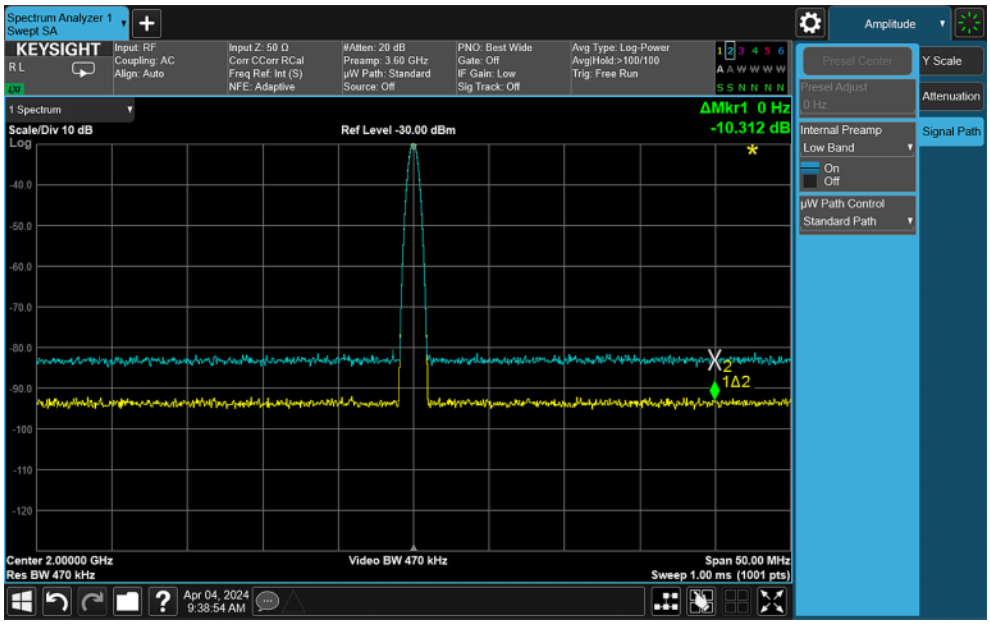

If either the signal level changes or the noise floor does not change as expected, see the appropriate RF Section Troubleshooting chapter to determine why the low band preamplifier is not working properly.

15. Turn the low band preamplifier off by pressing **Internal Preamp**, **Off**.
16. Tune the instrument to 6 GHz by pressing **Frequency**, **Center Frequency 6 GHz**.
17. Tune the signal generator to 6 GHz.
18. Center the A12 Yig Tuned Filter by pressing **Amplitude**, **Signal Path**, **Presel Center**.
19. Reset trace 2 by pressing **Trace**, verify that **Select Trace** is **Trace 2**, and press **View/Blank**, **Active**, wait for **Avg/Hold** to reach 100, then press **View**.
20. Reset the marker by pressing **Marker**, **Marker Mode**, **Off**, then **Normal**, then press the **Up Arrow** four times to move the marker to the first vertical graticule from the right of the display.

21. Activate the marker delta function by pressing **Marker Mode**, **Delta**.
22. Turn the high band preamplifier on by pressing **Amplitude**, **Signal Path**, **Internal Preamp**, **Full Range**, **On**.
23. Allow the **Avg/Hold** to reach 100.
24. The signal level should remain the same while the noise floor at the marker should drop by approximately 18 dB, as seen in Figure 5-12.

Figure 5-12 High Band Preamplifier On and Off

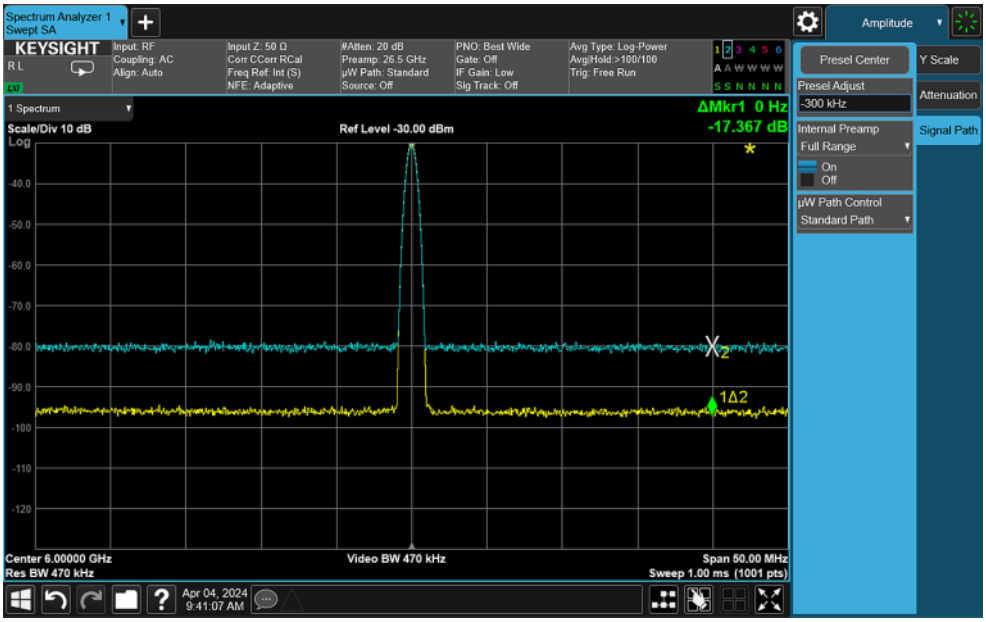

If either the signal level changes or the noise floor does not change as expected, see the "A11 Low Band Switch" section in Chapter 6, "RF Input Section (RF/Microwave)," to determine why the high band preamplifier is not working properly.

25. Turn the high band preamplifier off by pressing **Internal Preamp**, **Off**.

IF Signal Path Isolation

The following procedure can be used to quickly cycle through the different IF signal paths whenever a signal level issue exists. Knowing if the issue only occurs for certain IF paths can help to quickly narrow down the possible suspect assemblies. This procedure uses a frequency of 6 GHz, but any frequency of interest could be used instead.

Table 5-3 IF Path versus IF Assemblies

IF Path	IF Assemblies Used
10 MHz	A2 Analog IF
	A3 Digital IF
25 MHz	A2 Analog IF
	A3 Digital IF
40 MHz	A3 Digital IF
255 MHz	A25 Wideband Analog IF
	A26 Wideband Digital IF
510 MHz	A25 Wideband Analog IF
	A26 Wideband Digital IF
	A27 Wideband Digital IF

1. Switch the instrument to the IQ Analyzer mode by selecting **Mode/Meas**, **IQ Analyzer**, **OK**.
2. Return the instrument to a known state by pressing **Mode Preset**.
3. Connect a signal generator to the instrument input and tune it to 6 GHz with a power level of -10 dBm.
4. Tune the center frequency of the instrument to 6 GHz by pressing **Frequency**, **Center Frequency 6 GHz**.
5. For clarity, turn the average trace off by pressing **Meas Setup**, **Avg/Hold Off**.
6. Put a marker on the signal by pressing **Marker**.
7. Go to the **Meas Setup**, **IF Path** menu.
8. Cycle through the different IF Paths that are available in the IF Path selection, as seen in Figure 5-13, and note any signal level drop-outs.

Figure 5-13 IF Signal Path Isolation

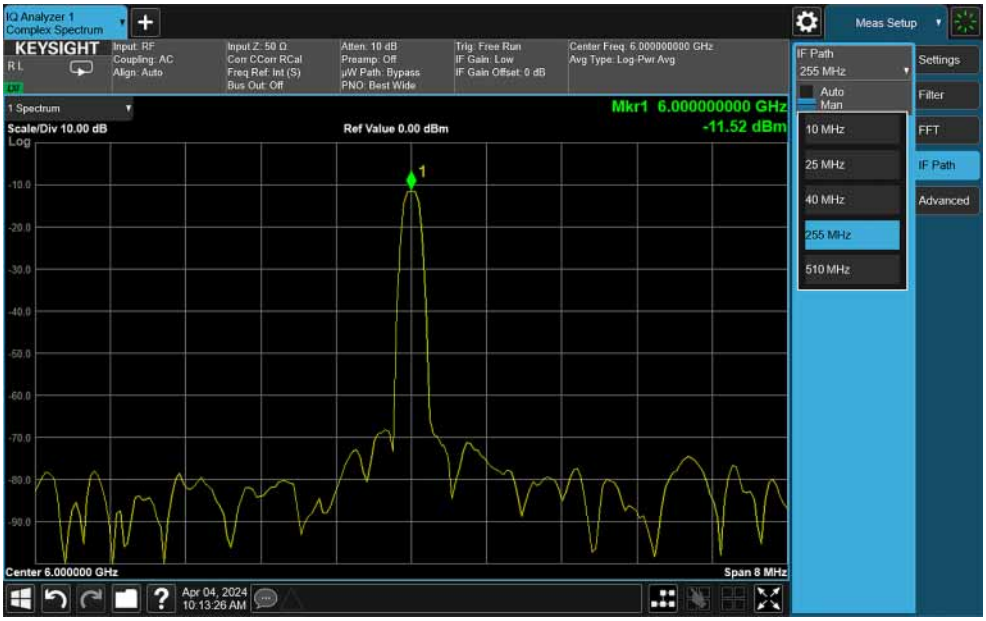

9. If any problems are found after cycling through all the available IF Paths, refer to Table 5-3 to see what assemblies the problem paths have in common and proceed from there.

IF Flatness Verification

There are two types of frequency response corrections that are very important for these instruments. They are the RF Flatness and the IF Flatness. Simply put, the RF flatness data corrects for the frequency response of the front end of the instrument and IF flatness corrects for the frequency response across the width of a given IF bandwidth.

It also needs to be noted that the IF response for a given bandwidth will vary depending on the mixer used. There are up to four different mixers in the A13 Front End assembly, depending on the frequency range of the instrument, and all six IF signal paths use multiple mixers. For example, the 40 MHz IF path can use up to four different mixers depending on the input frequency. Each of these would have a different uncorrected response across the bandwidth, and thus there will be four different sets of IF flatness corrections for the 40 MHz IF signal path alone.

The following procedure can be used to view the IF response both with and without corrections applied for the 255 MHz IF Path for the three mixer variations if the instrument being verified does not have the 255 MHz IF Path enabled, or there is another IF Path of interest that could be used instead.

NOTE

While this procedure operates as though the frequency response of the signal generator used is perfect, it needs to be understood that, while they may be very small, across a wide bandwidth there are frequency response errors associated with the signal generator used itself. This procedure is used to look for obvious issues with the IF flatness, not to confirm performance verification.

1. Enable the service menus. See Chapter 16, “Service and Diagnostics Menus,” if instructions for this are needed.
2. Switch the instrument to the IQ Analyzer mode by selecting **Mode/Meas**, **IQ Analyzer**, **OK**.
3. Return the instrument to a known state by pressing **Mode Preset**.
4. Connect a signal generator to the instrument input and tune it to 3 GHz with a power level of -10 dBm.
5. Tune the center frequency of the instrument to 3 GHz by pressing **Frequency**, **Center Frequency 3 GHz**.
6. Set the span to 255 MHz by pressing **Span 255 MHz**.
7. Set the scale per division to 3 dB by pressing **Amplitude**, **Scale/Div 3 dB**.
8. Set the trace average type to maximum by pressing **Meas Setup**, **Avg Type**, **Maximum**.
9. Slowly vary the frequency of the signal generator to draw the corrected IF response using mixers #1 and #2 on the display, as seen in Figure 5-14.

Figure 5-14 255 MHz IF Path Flatness - 3 GHz – IF Flatness On

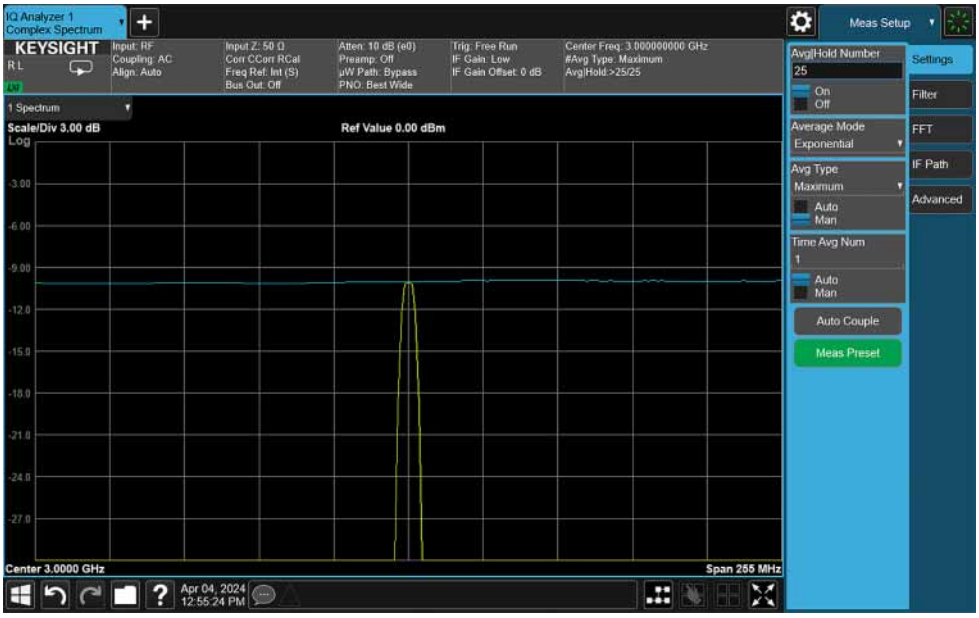

NOTE

The IQ Analyzer application Complex Spectrum measurement has two displays by default – Spectrum and IQ Waveform. Double-tapping in the Spectrum display will maximize that display and hide the IQ Waveform display, making this measurement easier to evaluate, as seen in Figure 5-14.

10. If the corrected frequency response error (blue trace) varies by more than ±1 dB from the value at the center of the display, the IF flatness adjustment should probably be run. But before doing so, proceed to the next step and view the uncorrected frequency response to see if there is a larger problem that may need to be fixed before running the adjustment.
11. Turn the IF flatness off by pressing **Meas Setup**, **Service Diagnostics**, **IF Flatness Off**.
12. Restart the maximum trace by pressing **Sweep**, **Restart**.
13. Slowly vary the frequency of the signal generator to draw the uncorrected IF response using mixers #1 and #2 on the display, as seen in Figure 5-15.

Figure 5-15 255 MHz IF Path Flatness - 3 GHz – IF Flatness Off

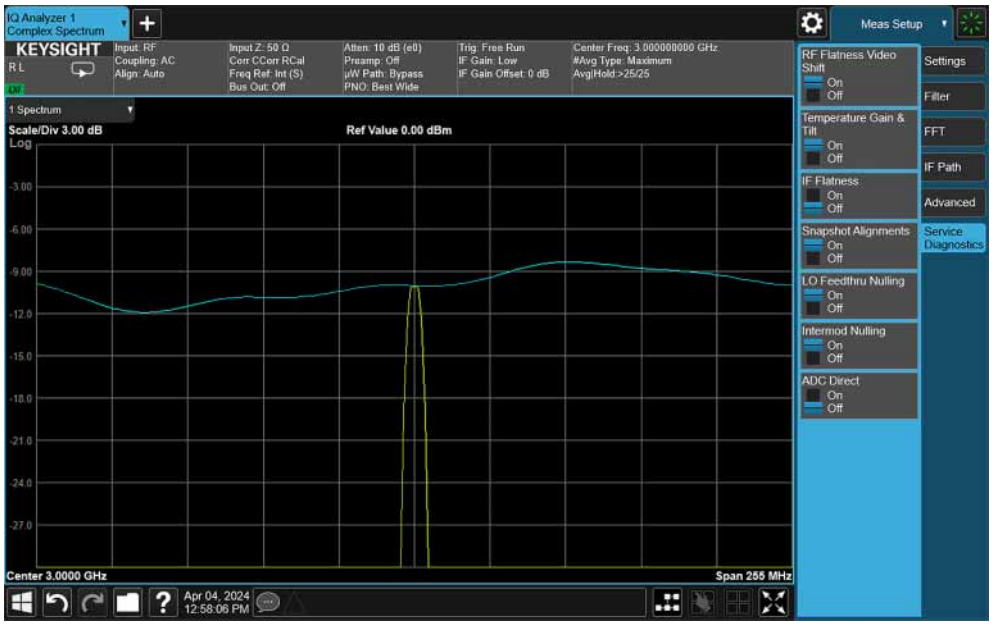

14. The uncorrected frequency response for the 255 MHz IF path at 3 GHz should look similar to that seen in Figure 5-15. If it varies greatly from this, further troubleshooting will be needed to determine why.
15. Tune the center frequency of the instrument to 8 GHz by pressing **Frequency**, **Center Frequency 8 GHz**.
16. Turn the IF flatness on by pressing **Meas Setup**, **Service Diagnostics**, **IF Flatness On**.
17. Tune the signal generator to 8 GHz.
18. Slowly vary the frequency of the signal generator to draw the corrected IF response using mixer #2 on the display, as seen in Figure 5-16.

Figure 5-16 255 MHz IF Path Flatness - 8 GHz - IF Flatness On

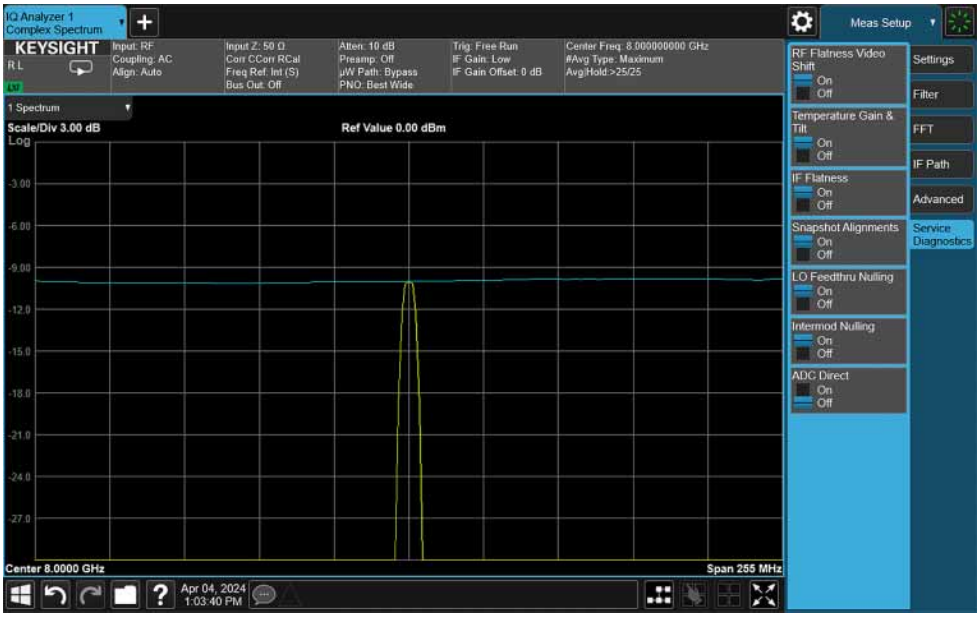

19. If the corrected frequency response error (blue trace) varies by more than ±1 dB from the value at the center of the display, the IF flatness adjustment should probably be run. But before doing so, proceed to the next step and view the uncorrected frequency response to see if there is a larger problem that may need to be fixed before running the adjustment.
20. Turn the IF flatness off by pressing **Meas Setup**, **Service Diagnostics**, **IF Flatness Off**.
21. Restart the maximum trace by pressing **Sweep**, **Restart**.
22. Slowly vary the frequency of the signal generator to draw the uncorrected IF response using mixer #2 on the display, as seen in Figure 5-17.

Figure 5-17 255 MHz IF Path Flatness - 8 GHz - IF Flatness Off

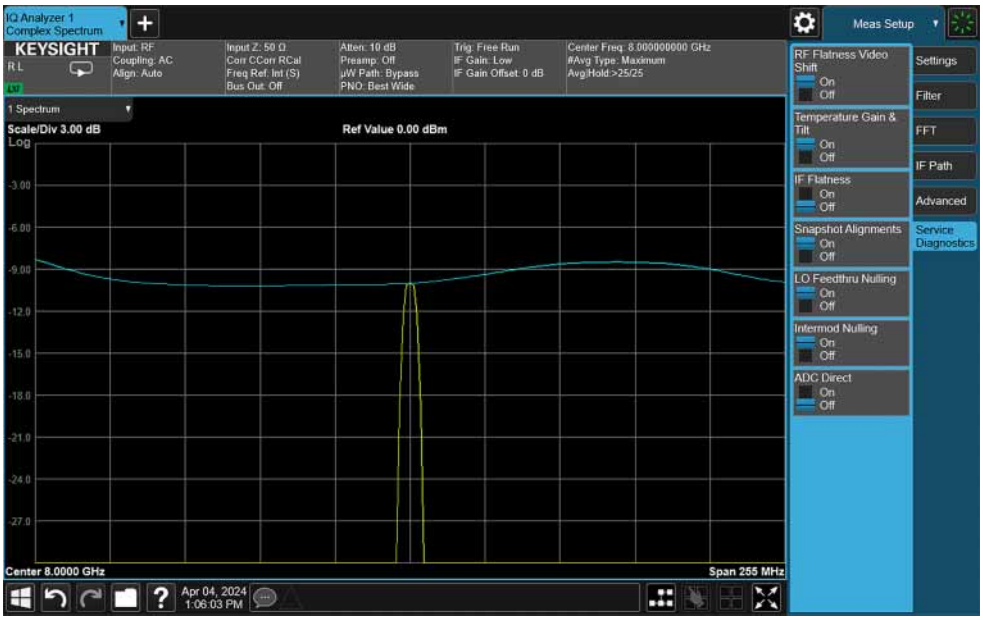

23. The uncorrected frequency response for the 255 MHz IF path at 8 MHz should look similar to that seen in Figure 5-17. If it varies greatly from this, further troubleshooting will be needed to determine why.

24. Tune the center frequency of the instrument to 20 GHz by pressing **Frequency**, **Center Frequency 20 GHz**.

25. Turn the IF flatness on by pressing **Meas Setup**, **Service Diagnostics**, **IF Flatness On**.

26. Tune the signal generator to 20 GHz.

27. Slowly vary the frequency of the signal generator to draw the corrected IF response using mixer #5 on the display, as seen in Figure 5-18.

Figure 5-18 255 MHz IF Path Flatness - 20 GHz - IF Flatness On

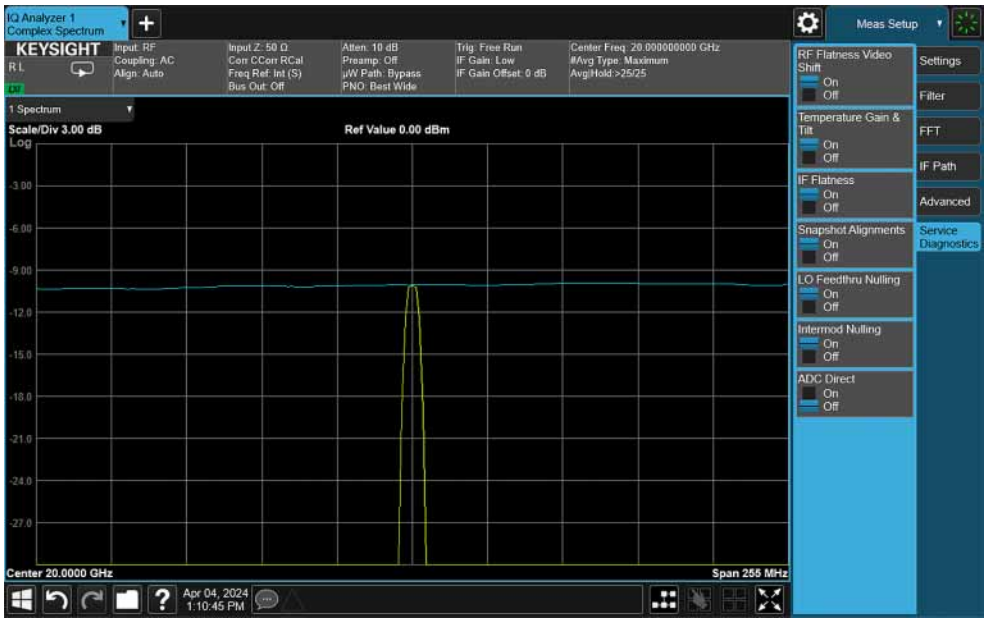

28. If the corrected frequency response error (blue trace) varies by more than ±1 dB from the value at the center of the display, the IF flatness adjustment should probably be run. But before doing so, proceed to the next step and view the uncorrected frequency response to see if there is a larger problem that may need to be fixed before running the adjustment.
29. Turn the IF flatness off by pressing **Meas Setup**, **Service Diagnostics**, **IF Flatness Off**.
30. Restart the maximum trace by pressing **Sweep**, **Restart**.
31. Slowly vary the frequency of the signal generator to draw the uncorrected IF response using mixer #5 on the display, as seen in Figure 5-19.

Figure 5-19 255 MHz IF Path Flatness - 20 GHz - IF Flatness Off

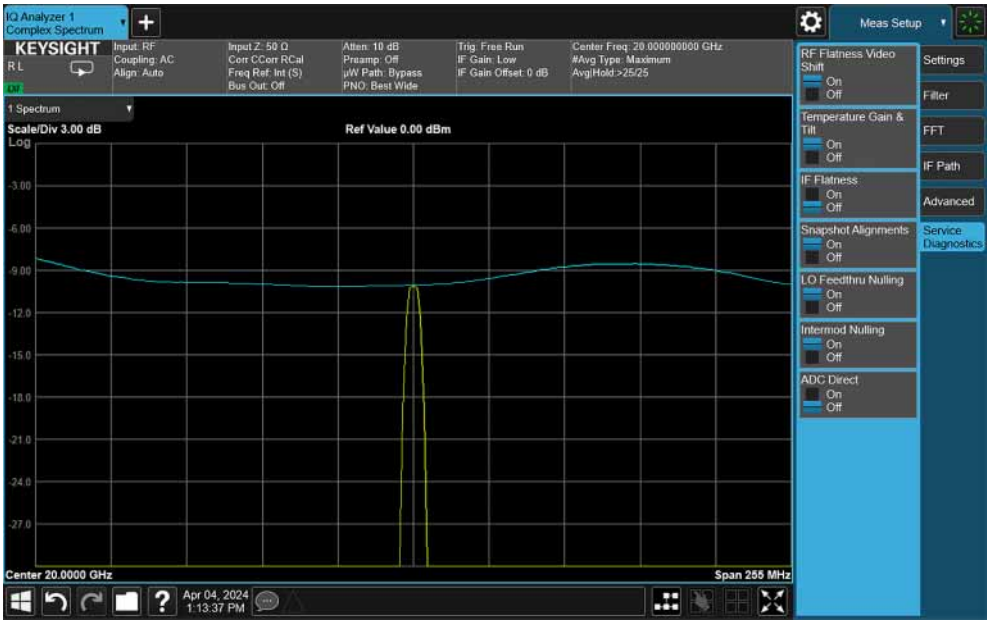

32. The uncorrected frequency response for the 255 MHz IF path at 20 GHz should look similar to that seen in Figure 5-19. If it varies greatly from this, further troubleshooting will be needed to determine why.

Power Supply Verification

Before replacing any assembly in the instrument, the status of all the power supply voltages should be verified. There is a status LED near the top of the A7 Midplane board for all twelve of the voltages that originate on the A6 Power Supply, along with two other voltages that are regulated on the A7 Midplane board. A list of the voltages can be seen in Table 5-4, and the location of the LEDs for each can be seen in Figure 5-20 and Figure 5-21.

Table 5-4 Power Supply Voltage

Supply Voltage	Regulated On	LED
+3.3 V Analog	A7 Midplane Board	DS13
+3.35 V Digital	A6 Power Supply	DS9
+5.1 V Standby	A6 Power Supply	DS12
+5.1 V Digital	A6 Power Supply	DS10
+5.2 V Analog	A6 Power Supply	DS5
+9 V Analog	A6 Power Supply	DS6
+12 V Digital	A6 Power Supply	DS11
+15 V Standby	A6 Power Supply	DS2
+15 V Analog	A6 Power Supply	DS4
+32 V Analog	A6 Power Supply	DS3
-5.2 V Analog	A7 Midplane Board	DS14
-7 V Analog	A6 Power Supply	DS8
-15 V Analog	A6 Power Supply	DS7
Fan	A6 Power Supply	DS1

Figure 5-20 Power Supply LED Locations – A7 Midplane Board Rear

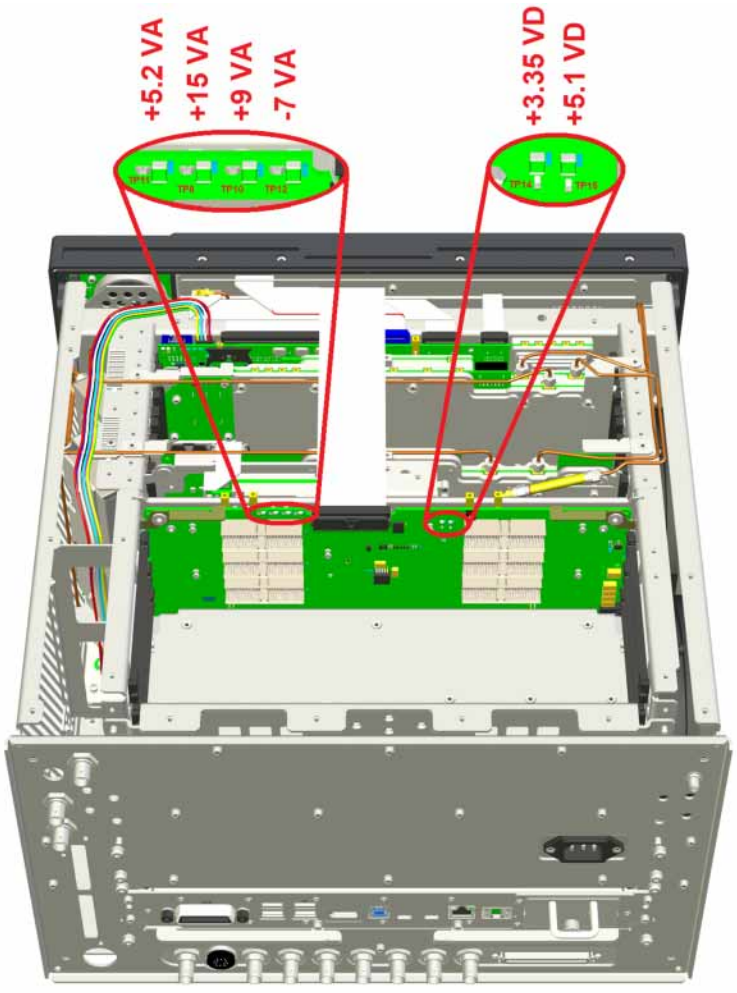

Figure 5-21 Power Supply LED Locations – A7 Midplane Board Front

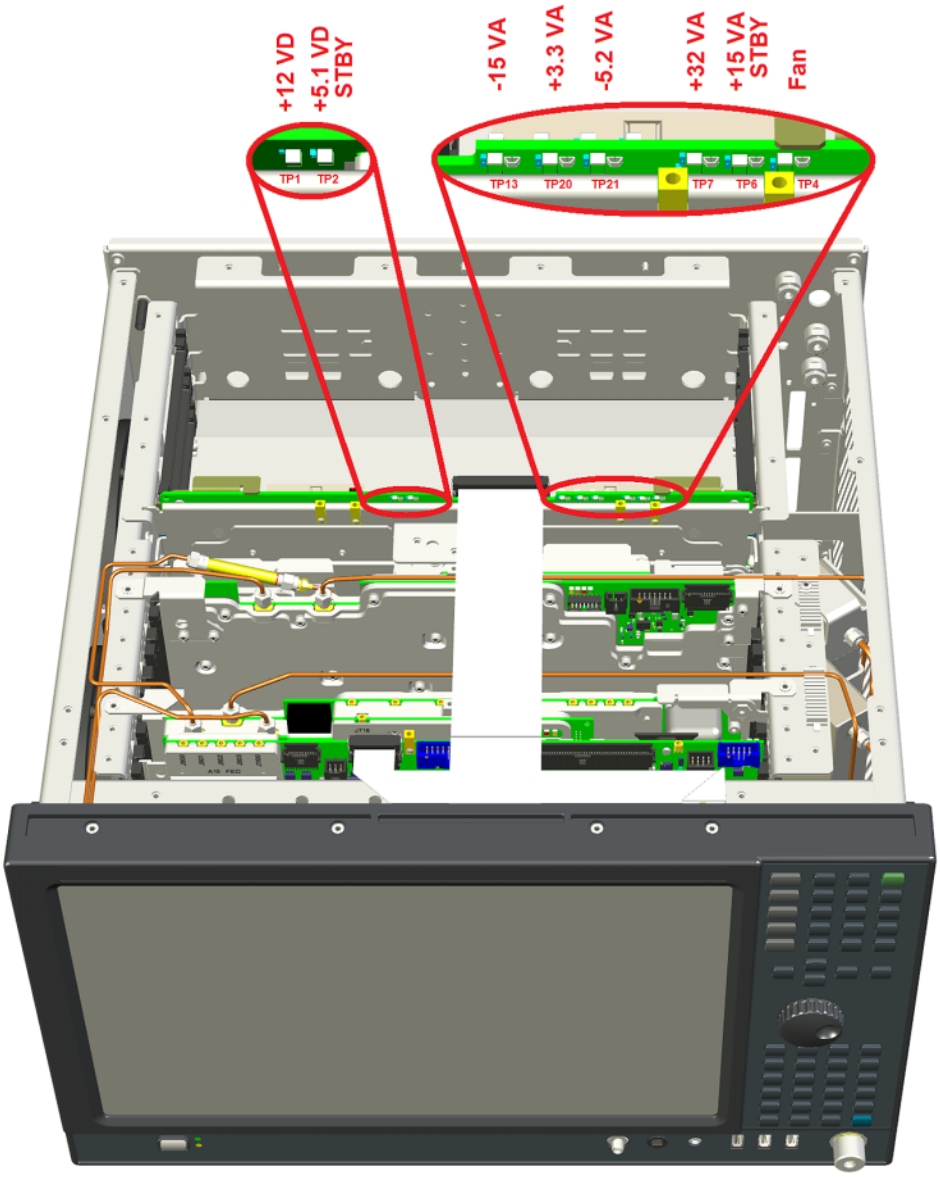

When the instrument is turned on all fourteen green power supply LEDs should be on. If there is any question as to the actual voltage level of any of these supplies, there is a test point next to each LED that could be measured with a DC voltmeter.

If any of the voltages regulated on the A6 Power Supply are not at the correct level, see Chapter 12, “Power Supply/Midplane,” to determine why.

If either of the two voltages regulated on the A7 Midplane board are not at the correct level, see Chapter 13, “Front Panel/Motherboard,” to determine why.

6 RF Input Section (RF/Microwave)

What You Will Find in This Chapter

The following information is found in this chapter:

1. Theory of operation of the RF section.
2. Isolating the cause of an hardware problem by verifying the functionality of assemblies in the RF section signal path.

NOTE Each section describes how the assembly works and gives information to help you troubleshoot the assembly. Each description covers the purpose of the assembly, describes the main components, and lists external connections to the assembly.

The following sections are found in this chapter:

RF Section Description on page 121
- Signal Path Overview on page 121
- A9 Input Attenuator A on page 124
- A10 Input Attenuator B on page 124
- A11 Low Band Switch on page 125
- A12 YTF Preselector on page 125
- A20 YTO on page 125
- A13 RF Front End Assembly on page 126
- A15 Front End Controller on page 127
- SW3 Low Noise Path Switch (Option LNP) on page 128
- SW1 and SW2 Microwave Preselector Bypass Switches (Option MPB) on page 128

Troubleshooting on page 129
- Quick Check to Verify the Low Band Signal Path on page 129

Troubleshooting a Low Band Problem on page 132
Quick Check to Verify High Band RF Path on page 140
Troubleshooting a High Band Problem on page 143

RF Section Description

This section covers only those optional frequency ranges listed below for the N9030B Signal Analyzer.

- Option 503, 3.6 GHz Frequency Range
- Option 508, 8.4 GHz Frequency Range
- Option 513, 13.6 GHz Frequency Range
- Option 526, 26.5 GHz Frequency Range

Signal Path Overview

The RF input signal can be routed through three different front end signal paths. These various paths are switched in and out based on where the signal analyzer center frequency is tuned.

1. **Low band RF path is used when the input frequency is ≤ 3600 MHz**
2. **High band RF path #1 is used when the input frequency is > 3.6 GHz to 13.6 GHz**
3. **High band RF path #2 is used when the input frequency is > 13.6 GHz to 26.5 GHz**

The RF section is designed to convert RF input signals to an intermediate frequency that is present at the RF output of the A13 Front End assembly. This intermediate frequency (IF) depends on installed options and the IF path selected (see Table 6-1). This chapter will assume the default operation in Spectrum Analyzer mode. Therefore the IF frequency will be 322.5 MHz.

Table 6-1

IF Path	IF	Mode
10 MHz (standard)	322.5 MHz	Spectrum Analyzer or IQ Analyzer
25 MHz (Option B25)	322.5 MHz	IQ Analyzer
40 MHz (Option B40)	250 MHz	IQ Analyzer
85 MHz (Option B85)	300 MHz	IQ Analyzer
160 MHz (Option B1X)	300 MHz	IQ Analyzer
255 MHz (Option B2X)	750 MHz	IQ Analyzer
510 MHz (Option B5X)	877.148 MHz	IQ Analyzer

The RF section is comprised of the following major assemblies:

- A9 Input Attenuator A
- A10 Input Attenuator B
- A11 Low Band Switch
- A12 YTF Preselector
- A20 YIG Tuned Oscillator
- A13 RF Front End Assembly - shown on the block diagram as A13A1 and A13A2, however the entire A13 assembly must be replaced.
- A15 Front End Controller
- SW3 Low Noise Path Switch (Option LNP)
- SW1 and SW2 Microwave Preselector Bypass Switches (Option MPB)

1. **RF input frequencies < 3600 MHz** route through the low band path. Refer to the RF/µW Low Band Path Block Diagram in Chapter 15 for details.

   The RF input signal level can be optimized by the A9 Input Attenuator A and/or A10 Input Attenuator B. The A11 Low Band Switch assembly contains a limiter that offers added protection for the mixer, and routes the input signal to the low band input of the A13 RF Front End assembly. There are (3) different signal paths on the input of the RF Front End assembly that the signal can be routed through depending on installed options and front panel settings.

   - Electronic Attenuator path, 0-24 dB (Option EA3)
   - Low Band Preamplifier path, 20 dB nominal gain (Option P03)
   - Direct to Mixer #1

NOTE

The RF input signal can route through the Electronic Attenuator section or the Preamplifier, but not both. All RF input frequencies < 3600 MHz go to Mixer #1.

The RF input signal is then mixed with the 1st LO from the A20 YTO assembly to a 1st intermediate frequency of 5122.5 MHz. Since the RF input signal is <3600 MHz for low band, this RF input signal is upconverted in Mixer #1 to the 1st IF. This 1st IF signal is then downconverted in Mixer #2 using the 4800 MHz 2nd LO generated on the A16 Reference assembly to a 2nd intermediate frequency of 322.5 MHz (5122.5 MHz (1st IF) – 4800 MHz (2nd LO)). The 2nd IF output is at A13A1J7. This signal path is used for all frequency range options when the RF input frequencies are < 3600 MHz. The control voltages and biasing for these assemblies come from the A15 Front End Controller.

2. **RF input frequencies from 3.6 GHz to 13.6 GHz** go through the high band path. Refer to the RF/µW High Band Path #1 Block Diagram in Chapter 15 for details.

   The input signal level can be optimized by Input Attenuator A and/or Input Attenuator B. The Low Band Switch assembly routes the signal through the A12 YTF Preselector. If one of the optional high band preamps is licensed, the signal can be routed through the preamp. The A15 Front End Controller provides switching signals.

   The Low Band Switch assembly performs the following tasks:

   - Provides a limiter that offers added protection for the mixer and optional preamp.
   - Contains the high band preamp.
   - Routes the input signal to the A12 YTF Preselector. If Options LNP or MPB are installed, the signal is routed through switches.

   The high band input switch in the Front End Assembly routes the RF input signal to Mixer #2, where it mixes with the LO and provides a 1st intermediate frequency of 322.5 MHz. The 322.5 MHz IF output is at A13A1J7. This is the signal path for Option 508, 8.4 GHz Frequency Range, Option 513, 13.6 GHz Frequency Range, and Option 526, 26.5 GHz Frequency Range (up to 13.6 GHz). The control voltages and biasing are provided by the A15 Front End Controller.

3. **RF input frequencies from 13.6 GHz to 26.5 GHz** go through the high band path. Refer to the RF/µW High Band Path #2 Block Diagram in Chapter 15 for details.

   The signal path for 13.6 GHz to 26.5 Ghz operation is almost the same as the 3.6 GHz to 13.6 GHz path. The only difference is that Mixer #3 is used in this path. The LO is doubled at tuned frequencies above 17 GHz.

Low Band Frequency Mixing Equations

For the 1st IF at Mixer #1:

IF1 = LO1 – RF

RF is the input signal at the SA

LO1 is the 1st LO signal from the A20 YTO assembly

For the 2nd IF at Mixer #2:

IF2 = IF1 – LO2

1F1 is the 1st IF signal from Mixer #1

LO2 is the 2nd LO signal from the A16 Reference assembly

High Band Frequency Mixing Equations

For input frequencies from 3.6 GHz to 8.4 GHz and 13.6 GHz to 17 GHz:

IF = LO x N – RF

For input frequencies from 8.4 GHz to 13.6 GHz and 17 GHz to 26.5 GHz:

IF = LO x 2 x N – RF

RF is the input signal at the SA

LO is the LO signal from the A20 YTO assembly

N is the harmonic mixing mode

N = 1 for 3.6 GHz to 13.6 GHz

N = 2 for 13.5 GHz to 26.5 GHz

A9 Input Attenuator A

This assembly has two 2 dB attenuator sections, a DC block and a cal signal input port. With the DC block switched in (AC coupled mode), the low end minimum frequency range increases from 3 Hz to 10 MHz due to capacitive effects.

A10 Input Attenuator B

This assembly has a total of 66 dB of attenuation to control the signal level into the Low Band Switch assembly. There is a 6 dB, 10 dB, 20 dB, and 30 dB section in the A10 assembly. Total input attenuation with the A9 and the A10 combined is 70 dB in 2 dB steps.

A11 Low Band Switch

Th A11 Low Band Switch assembly operates across the entire frequency range of the analyzer. The switch has 3 main functions:

- Switch RF input frequencies from 3 Hz to < 3.6 GHz RF Output to the A13 RF Front End Assembly.
- Switch input frequencies from 3.6 GHz to 26.5 GHz Microwave RF Output to the A12 YTF Preselector.
- Contains optional high band preamplifier, which has a typical gain of 30 dB and a noise figure from 9 to 12 dB up to 18 GHz.

NOTE

If the stop frequency is set to 3.6 GHz, the analyzer displays only the Low Band signal path. If the analyzer stop frequency is set above 3.6 GHz and the start frequency is set below 3.6 GHz in Spectrum Analyzer mode, the analyzer will sweep up to 3.6 GHz in low band and then automatically switch to the high band path above 3.6 GHz.

A12 YTF Preselector

The A12 YTF Preselector is used for input frequencies greater than 3.6 GHz. Signals less than 3.6 GHz bypass the YTF assembly and are routed to the low band input of the A13 RF Front End Assembly. The YTF Preselector is a YIG tunable bandpass filter whose main purpose is to track the input signal and to filter out unwanted spurious or image response signals. The YTF Preselector has a 3 dB bandwidth greater than 40 MHz and an insertion loss of ~ 6.5 dB.

The preselector requires centering for optimum amplitude accuracy. The Auto Align routine will perform a rough centering during the preselector two point tuning algorithm. However, when troubleshooting, press **Amplitude**, **Preselector Center** to manually center the preselector.

The YTF Preselector is not present in analyzers with Option 503, 3.6 GHz frequency range.

A20 YTO

The A20 YTO assembly contains a YIG tunable oscillator that provides the 1st LO signal required for the frequency conversion. With Option EP1, the A20 YTO provides this signal directly to the A13 Front End Assembly. With Option EP0, the LO signal is routed first to the A14 Synthesizer to be phase locked with the DDS before being sent to the Front End Assembly. The 1st LO has a frequency range from 3.80 to 8.73 GHz. The output power is +13 to +18 dBm. In order to maximize the conversion efficiency and avoid LO unlock, sufficient LO power must be supplied.

A13 RF Front End Assembly

This assembly consists of two circuit boards, the A13A1 Front End and the A13A2 Switched Filter, that are not separately replaceable. The entire A13 assembly must be replaced. See Figure 6-1.

Figure 6-1 A13 RF Front End Assembly View from Front Panel

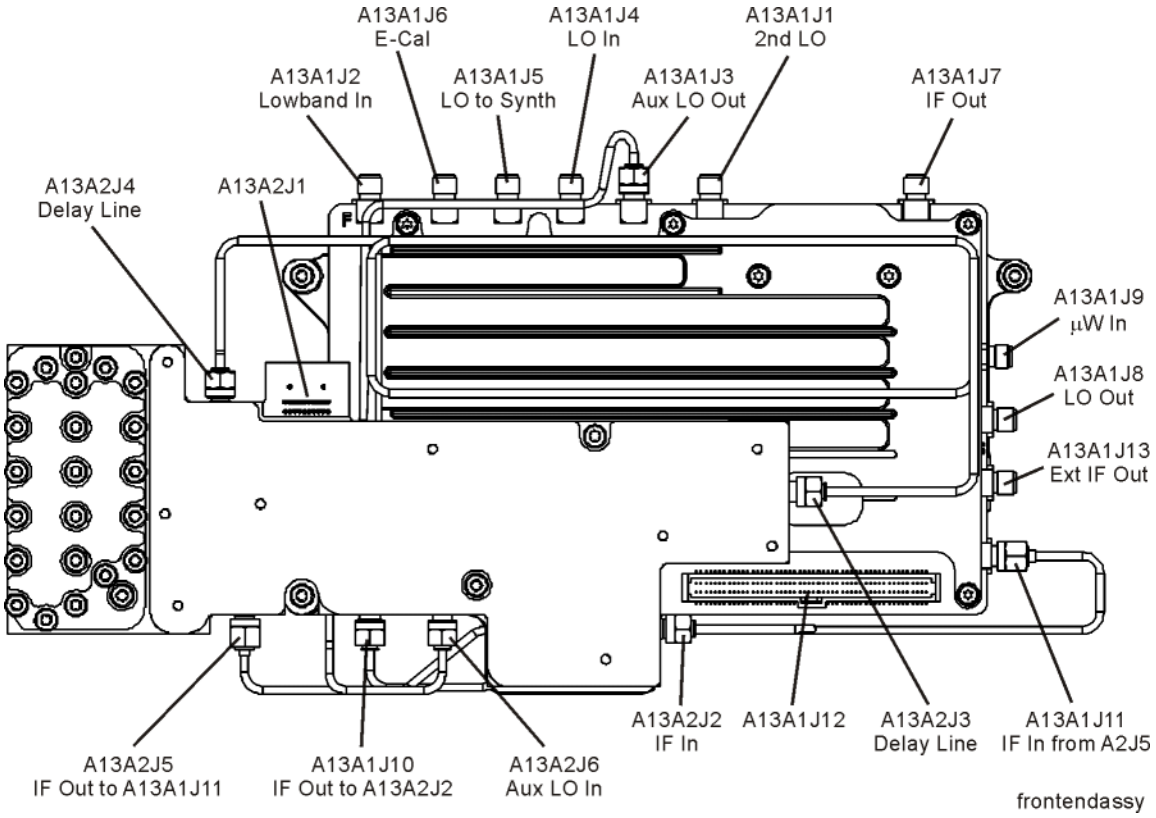

The A13 Front End Assembly provides a variety of functions for the instrument, which include:

Low Band (3 Hz to <3.6 GHz)

- Input Low-pass filter
- Optional Low Band Electronic Attenuator (0-24 dB)
- Optional Preamplifier and Limiter
- Mixer #1 for 1st IF (5122.5 MHz)
- 1st IF Amplifier
- Switched IF Bandwidth Filters (A13A2)
- LO and IM nulling (A13A2)
- Mixer #2 for 2nd IF (322.5 MHz)

High Band (3.6 GHz to 26.5 GHz)

- Input Amplifier
- Selectable Mixers for 1st IF (322.5 MHz)
    - Mixer #2 (RF input signals 3.6 GHz to <13.6 GHz)
    - Mixer #3 (RF input signals 13.6 GHz to 26.5 GHz)

Miscellaneous

- LO Distribution
- LO Doubler
- External Mixing Diplexer

A15 Front End Controller

Provides the correct biasing and switch control logic to the following RF assemblies and circuits:

- A9 Input Attenuator A
- A10 Input Attenuator B
- A11 Low Band Switch
- SW3 Low Noise Path Switch (Option LNP)
- A12 YTF Preselector (Input signals > 3.6 GHz)
- SW1/SW2 Microwave Preselector Bypass Switches (Option MPB)
- A13 Front End Assembly including the A13A2 switched filter
- (Optional) High Band Preamplifier
- (Optional) Low Band Preamplifier

– Electronic Attenuator (Option EA3)

NOTE Refer to Chapter 8, "Front End Controller," for detailed descriptions and troubleshooting procedures.

SW3 Low Noise Path Switch (Option LNP)

The Low Noise Path allows the A11 Low Band Switch assembly to be bypassed via Switch 3, improving sensitivity in the high band path.

SW1 and SW2 Microwave Preselector Bypass Switches (Option MPB)

The MPB Path allows the A12 YTF Preselector to be bypassed via Switches 1 and 2, improving amplitude accuracy and enabling wider IF bandwidth in the high band path.

Troubleshooting

Quick Check to Verify the Low Band Signal Path

Refer to the RF/µW Low Band Path Block Diagram in Chapter 15.

The Low Band signal path (sometimes referred to as Band 0) is used for all signals less than 3.6 GHz when the analyzer is used in normal operation. If the stop frequency is set to 3.6 GHz, the analyzer displays only the Low Band signal path. If the analyzer stop frequency is set above 3.6 GHz and the start frequency is set below 3.6 GHz, the analyzer will sweep up to 3.6 GHz in low band and then automatically switch to the high band path above 3.6 GHz.

The analyzer has an internal 50 MHz amplitude reference signal that is used to verify the low band path. This 50 MHz calibrator is used when the analyzer performs many of the internal alignment routines. Therefore, the functionality of the 50 MHz calibrator and low band path are critical to passing alignments.

Equipment needed:

Spectrum analyzer with frequency range to at least 8 GHz

Signal source with frequency range to at least 3.6 GHz

Directional coupler or power splitter with frequency range at least to 9 GHz

2 each, quality SMA or 3.5 mm cables

90° SMA (m) to SMA (f) adapter

MMCX (f) to SMA (f) cable

SMA (f) to SMA (f) adapter

SMA (m) to SMA (m) adapter

NOTE The expected signal power levels in the following procedures do not account for the loss from cables and adapters used with the external equipment. It is recommended that a power meter be used to verify the additional loss.

1. With the instrument off, remove the outer cover and the top brace. See Chapter 18, “Assembly Replacement Procedures,” in this manual. Then turn the instrument on and allow it to complete its full boot up process to Spectrum Analyzer mode.

IMPORTANT Turn off auto align by pressing **System**, **Alignments**, **Auto Align**, **Off**.

2. Enable and use the internal 50 MHz, -25 dBm calibrator signal as a reference for troubleshooting by pressing **Mode Preset**, **Input/Output**, **Input**, **RF Calibrator**, **50 MHz** on the analyzer.

3. Now press **FREQ**, **Center Frequency**, **50 MHz**, **Span**, **1 MHz**, **Peak Search**. The 50 MHz reference signal should measure –25 dBm ± 2 dB on the analyzer display. If the power level is within tolerance, the low band path is functioning correctly at 50 MHz.

4. If the power level is incorrect, change the 50 MHz RF Calibrator to the 4.8 GHz RF Calibrator and set the analyzer center frequency to 4.8 GHz so it is analyzing in high band. Since several of the same signal path components are shared between low band and high band, determining if the problem appears in both paths is helpful. The 4.8 GHz reference signal should measure –28 dBm ± 2 dB. If this power level is also incorrect, skip to step 7.

5. If the power level at 4.8 GHz is within tolerance, continue the low band check. Select the 50 MHz RF calibrator and set the analyzer center frequency to 50 MHz again, then, press **Span**, **Zero Span**. Disconnect the W16 cable from A13A1J7 on the Front End Assembly IF Out. See Figure 6-1 for connector location. Connect A13A1J7 output to an external spectrum analyzer and verify the 322.5 MHz intermediate frequency is measuring –22 dBm ± 3 dB using the same analyzer settings as in Figure 6-2.

Figure 6-2 322.5 MHz Intermediate Frequency

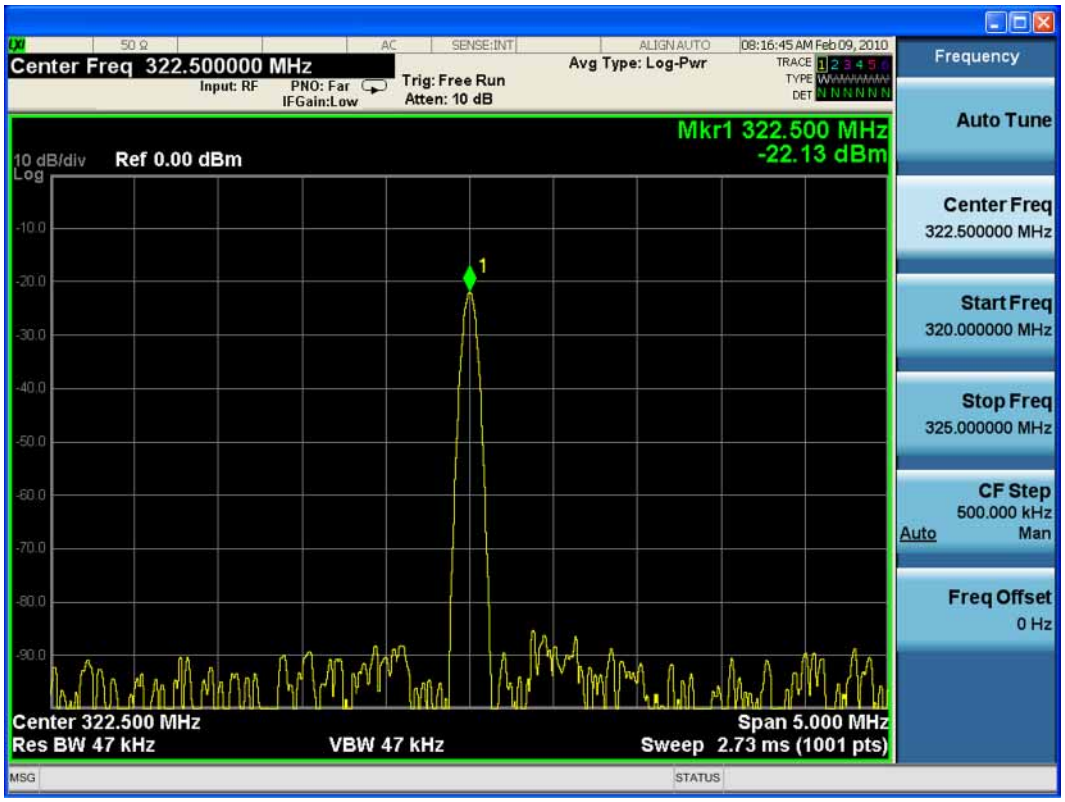

6. If this power level is correct, the signal path from the A9 Input Attenuator A to the A13 Front End Assembly is operating correctly in low band. Reconnect the W16 cable to A13A1J7 and troubleshoot the IF path assemblies.

NOTE

Flatness issues or power level problems at other input frequencies below 3600 MHz may exist. This type of problem can be diagnosed using an external source to verify performance.

7. If this power level is incorrect, the following assemblies need to be verified using the 50 MHz internal calibrator signal.
   - A9 Input Attenuator A and A10 Input Attenuator B
   - A11 Low Band Switch
   - A16 Reference Assembly (50 MHz calibrator, 2nd LO)
   - A20 YTO and A14 Synthesizer (1st LO)
   - A13 RF Front End Assembly

   Proceed to "Troubleshooting a Low Band Problem" on page 132.

NOTE

If the power level was still incorrect when switching the calibrator signal to 4.8 GHz, start from the beginning with the RF Calibrator Verification. If it was incorrect only with the 50 MHz calibrator signal, start with the A11 Low Band Switch Verification.

Troubleshooting a Low Band Problem

In order to gain access to the front end components, remove the front frame assembly, but leave the ribbon cable connected so you can still control the instrument. Then remove the RF Bracket on the right side of the chassis. Refer to the removal procedures in Chapter 18, “Assembly Replacement Procedures.”

Refer to the RF/µW Low Band Path Block Diagram in Chapter 15, “Block Diagrams.” and follow the instructions in the settings box. If the instrument has Option EP0 installed, refer to the "RF/µW Lowband Path Opt EP0 and B2X Block Diagram" instead.

The internal RF calibrator is used for several verification procedures, 50 MHz for low band path and 4.8 GHz for high band path. To enable the internal 50 MHz, –25 dBm calibrator signal press **Input/Output**, **Input**, **RF Calibrator**, **50 MHz**.

NOTE The Span is set to 0 Hz to stop the LO from sweeping and switches from automatically changing.

50 MHz RF Calibrator Signal Verification

First verify the RF Calibrator signal is correct. On the A16 Reference assembly, disconnect semi rigid cable W3 from A16J701 and measure A16J701 with an external spectrum analyzer. See Figure 6-3 for location of connector. With the internal calibrator enabled, expected signal is 50 MHz at –25 dBm ± 0.5 dB. If signal level is incorrect, suspect A16 Reference assembly is faulty, or the 50 MHz calibrator amplitude requires adjustment using the field calibration software.

Figure 6-3 A16 Reference Assembly

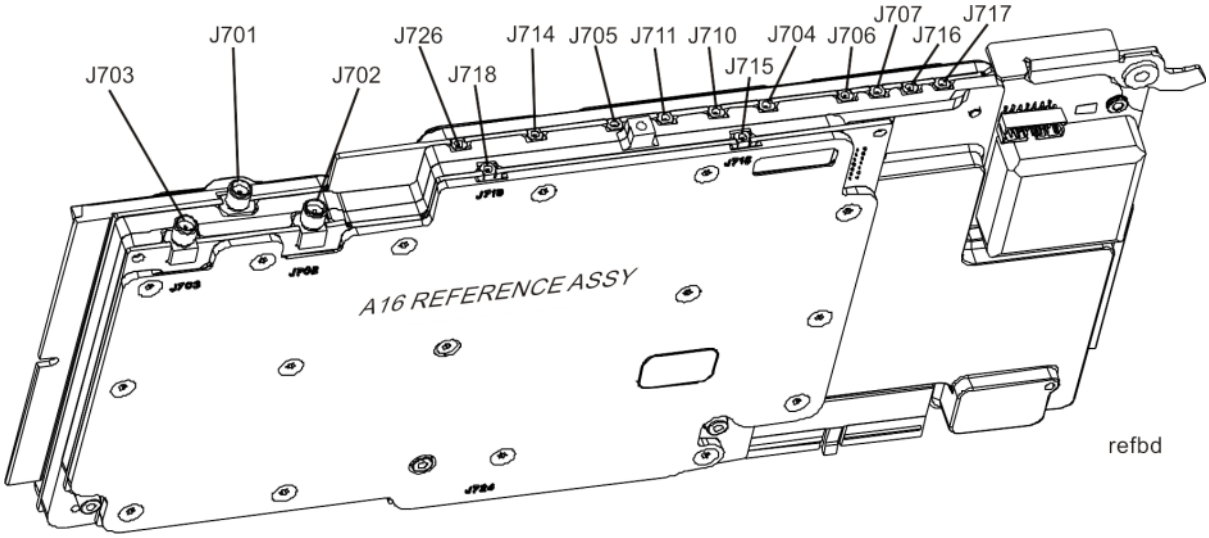

NOTE Before proceeding with the next verification procedure, be sure to reconnect any disconnected cables and restore the prescribed settings from the block diagram, if changed.

A9/A10 Input Attenuator Verification

To perform input attenuator tests, connect an external signal source set to 50 MHz and –25 dBm (with output initially Off) to the RF input connector of the analyzer under test. Then disconnect the semi-rigid cable W6 (W51 for instruments with Option LNP) from the A10 Input Attenuator B output port and connect an external spectrum analyzer to the attenuator output. See Figure 6-4 for location of connector. This setup will be used to verify that the calibrator switch and attenuator steps are operating properly.

Figure 6-4 RF Section

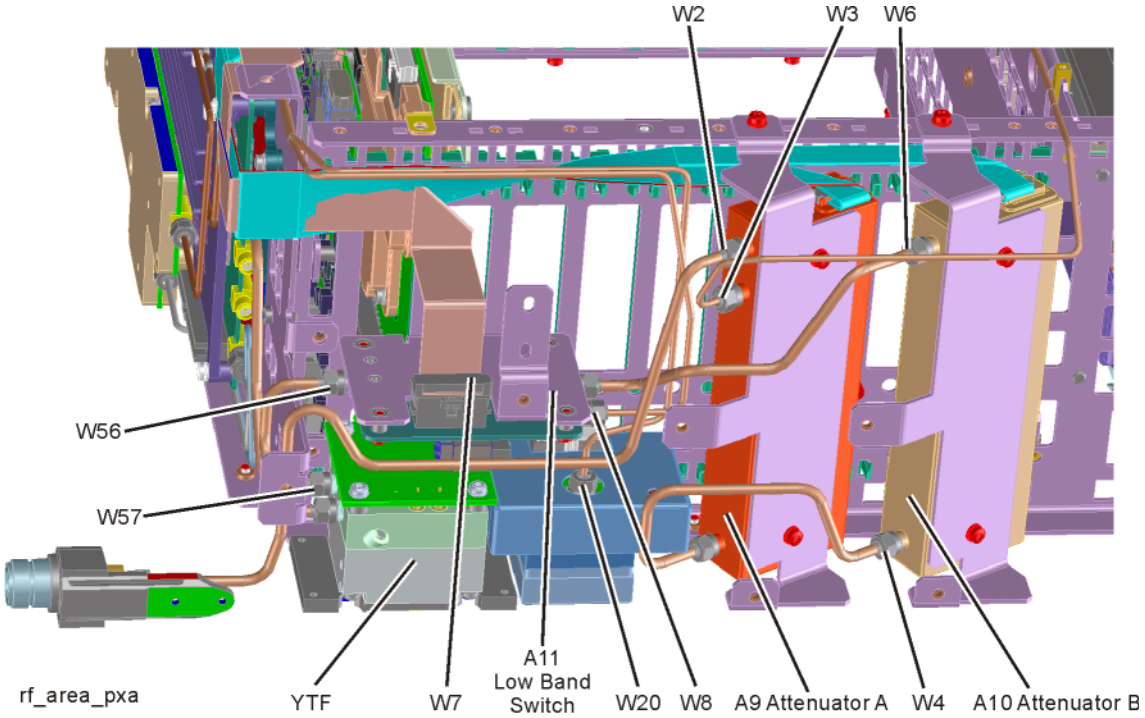

Calibrator Switch Test

To verify calibrator switch operation, enable and measure the calibrator signal with the external spectrum analyzer connected to the A10 Attenuator output. Default attenuation at boot up is 10 dB, so the expected signal is 50 MHz at –35 dBm ± 0.5 dB.

If the signal is incorrect, press **Input/Output**, **Input**, **RF Calibrator**, **Off** to disable the internal calibrator and then turn the external signal source RF output On. If the signal level is still incorrect, proceed with the Attenuator Step Test. However, if the signal level at the attenuator output is now correct, suspect the A9 Attenuator cal switch or a faulty control signal from the A15 Front End Controller assembly. Inspect the ribbon cable W5 controlling the attenuators for damage, then refer to Chapter 8, "Front End Controller," to verify that the A9 attenuator is being controlled properly before replacing it.

Attenuator Step Test

Set the signal source connected to the input port to 0 dBm. On the analyzer under test, press **Amplitude**, **Attenuation**, **Mech Atten 0 dB** to change input attenuation to 0 dB. The external spectrum analyzer connected to A10 Attenuator output port should indicate a 0 dBm level.

Refer to Table 6-2. Change the input attenuation to each of the Attenuator Setting values, and compare the external SA measurements with the corresponding expected Power values.

If a measurement is incorrect, suspect an attenuator according to the table, RF input connector, or the interconnect cables W2 and W4. See Figure 6-4 for their locations.

Table 6-2

Analyzer Under Test Attenuator Setting (dB)	Power at A10 Output Port	Input Attenuator Being Tested
0	0 dBm (reference)	Both set to through path
2	–2	A9
4	–4	A9
6	–6	A10
8	–8	A9 set to 2 dB, A10 set to 6 dB
10	–10	A10
20	–20	A10
30	–30	A10
40	–40	A10
50	–50	A10
60	–60	A10
70	–70	A9 set to 4 dB, A10 set to 66 dB

A11 Low Band Switch Verification

First, enable the 50 MHz internal calibrator signal. Disconnect W8 from A13A1J2. See Figure 6-1 for location of connector. Attach a right angle SMA adapter to W8 and measure the output of the Low Band Switch with an external spectrum analyzer. Expected signal is 50 MHz at –35.3 dBm since the A11 Low Band Switch and SW3 (Option LNP) have a few tenths of a dB loss.

If the signal level is incorrect, remove A10 Input Attenuator B output cable and measure the output power. Expected signal is 50 MHz at –35 dBm. See Figure 6-4 for location of attenuator. If the attenuator output signal is correct but the Low Band output at W8 is incorrect, suspect the A11 Low Band Switch, the interconnect cables, Switch 3 if Option LNP is present, or the switch control signals.

Refer to Chapter 8, “Front End Controller,” for detailed descriptions and troubleshooting procedures for the control signals and LNP switch.

Second LO Level Verification

The second LO signal comes from the A16 Reference Assembly, routes to the A13 Front End Assembly, and is only used in Low Band.

To verify the second LO signal, disconnect W18 from A13A1J1 (see Figure 6-1), and connect an external spectrum analyzer to W18 using a right-angle SMA adapter. Alternatively, connect the external SA directly to A16J702 at the A16 Reference Assembly (see Figure 6-3). Set the external SA input attenuator to at least 20 dB to prevent overload. Expected signal is 4800 MHz at +10 dBm when a low loss test cable is used.

If the signal is incorrect, suspect the A16 Reference Assembly.

First LO Level Verification

The first LO is the A20 YTO assembly. The first LO is phased locked by the A14 Synthesizer assembly, which also controls the YTO with tuning signals via ribbon cable W23. If Option EP0 is installed, the LO signal will be alternatively supplied by the A14 DDS Synthesizer depending on analyzer settings and modes, but not in Swept SA mode.

To assure the first LO is tuned to the correct frequency and power, measure the A13 Front End assembly at A13A1J3 when the analyzer center frequency is 50 MHz. Refer to Figure 6-1 for connector locations. This test port is chosen because removing cable W19 will not cause the analyzer LO phase lock loop to unlock for instruments with Option EP1 installed, which would affect the LO frequency measurement.

The LO signal should measure 5172.5 MHz at +9 dBm ± 3 dB if Option EP1 is installed, or 0 dBm ± 3 dB with Option EP0.

If the signal level is incorrect, measure the signal coming from the A20 YTO at A13A1J4 (EP1) or at A14J2 (EP0). In order to measure this signal and avoid an LO Unlock, you will need to install a directional coupler. A power splitter can

be used if a coupler is not available, but sufficient power might not reach the assembly input. Connect the input of the device to the end of cable W20 (EP1)/W83 (EP0) that was disconnected from A13A1J4/A14J2, using a 90° (elbow) SMA adapter. Connect the main output or one arm of the device to A13A1J4/A14J2 using an appropriate SMA adapter. Connect the external spectrum analyzer to the coupled output or other arm of the device. Set the measuring spectrum analyzer reference level offset to the coupling factor of the device, typically -10 dB and -6 dB for Keysight couplers and splitters, respectively.

The signal should be 5172.5 MHz at +10 dBm ± 3 dB.

If the signal level is incorrect, suspect the A20 YTO, A16 Reference, or the interconnect cables. Refer to the chapters on these assemblies for troubleshooting steps.

With Option EP1 installed, part of the first LO phase lock loop is from A13A1J5, Synth Out, back to the A14 LO Synthesizer. This too can be measured to verify the first LO from A13 Front End Assembly. When measuring A13A1J5, the coupler or splitter must also be used. The expected signal level is 5172.5 MHz at +10 dBm ± 3 dB.

A13 Front End Assembly Verification

NOTE

The A13 Front End assembly is shown as A13A1 and A13A2 for troubleshooting clarification. However, A13A1 and A13A2 are not separately replaceable. The entire A13 assembly must be replaced.

Many portions of the Front End Assembly have been verified earlier in the Low Band troubleshooting process outlined above.

The input signal level was measured on W8 as part of the A11 Low Band Switch verification.

The output signal level was measured at A13A1J7 during the quick check to verify the Low Band Signal Path.

The Second LO input was tested during the Second LO Verification.

The LO input at W20, and the LO outputs were tested when performing the First LO Verification.

It is possible to measure the W48 input cable to the Switched Filter where it connects to A13A2J2, and the output of the Switched Filter at W49 where it connects to A13A1J11. The A13A2 Switched Filter is not separately replaceable, but being able to determine where the signal level is faulty, can aid in verifying the faulty assembly. See the block diagram for signal levels

CAUTION

When measuring W48, the analyzer must be powered down and ribbon cable W28 on the Switched Filter removed to gain access to W48. Once the measuring spectrum analyzer is connected to W48, the W28 ribbon cable must be reinstalled, and only then can the analyzer be powered back up. The ribbon cable is fragile so it cannot be bent out of the way to access the cable, and should not be removed and installed with power applied.

Electronic Attenuator Verification (Option EA3)

The electronic attenuator is aligned as part of the System Gain internal alignment process. See the description of the initial alignments and the location of the alignment history file in the Boot Up and Initialization Troubleshooting chapter. Viewing the Alignment History file will tell you if other alignment tests failed, and reveal which electronic attenuator steps failed.

To verify the electronic attenuator operation on instruments with Option EA3, set up the analyzer to view the 50 MHz calibrator signal on screen. Enable the calibrator signal and press **FREQ**, **Center Frequency**, **50 MHz**, **Span**, **500 kHz**

Press **Peak Search** to place a marker on the calibrator signal, then press **Marker Delta**

Activate the electronic attenuator. Press **AMPTD**, **Attenuation**, **Enable Elec Atten**. Then press **Elec Atten**.

Press the up arrow key to step through all attenuator steps while monitoring the marker delta readout. The signal level should not change more than 0.4 dB as indicated by the marker delta readout.

If the attenuator switches slowly, or the signal is not present when the electronic attenuator is switched into the signal path or the signal appears only when the attenuator is switched on, suspect the control signals from the A15 Front End Controller are faulty or the A13 Front End assembly is faulty. If the attenuator switches, but the switching error between attenuator settings is greater than ± 0.4 dB, assure that any other internal alignment failures are resolved since the System Gain alignment must run before optimum performance is possible. Assure you have evaluated all causes before you replace the Front End assembly.

If you determine the problem is at a frequency other than 50 MHz, perform the low band flatness adjustment before replacing the Front End assembly.

Low Band Preamp Verification (Option P03, P08, P13, P26)

The Preamp is aligned as part of the System Gain internal alignment process. See the description of the initial alignments and the location of the alignment history file in Chapter 2, “Boot Up and Initialization”, on page 33. Viewing the Alignment History file will tell you if other alignment tests failed, and reveal pass or fail information for the preamp.

If any of the preamp options are installed, the Low Band preamp can be verified as follows:

Set up the analyzer to view the 50 MHz calibrator signal on screen

Press **AMPTD**, **Attenuation**, and verify that the Enable Elec Atten key is set to Off. It is not possible to turn on both the electronic attenuator and preamp at the same time.

Press **AMPTD**, **More**, **Internal Preamp**, **Low Band** to activate the preamp.

The expected operation is the signal level will not change more than ± 0.5 dB and the noise floor will increase due to the fact the input attenuator is automatically increased. If the amplitude error when switching the preamp on and off is greater than 0.5 dB, assure that any other internal alignment failures are resolved since the System Gain alignment must run before optimum performance is possible. Assure you have evaluated all causes including A15 Front End Controller switching problems, before you replace the Front End assembly.

If you determine the problem is at a frequency other than 50 MHz, perform the low band flatness adjustment before replacing the Front End assembly.

Quick Check to Verify High Band RF Path

Refer to the RF/µW High Band Path #1 Block Diagram in Chapter 15.

The High Band signal path (sometimes referred to as Band 1-Band 4) is used for all signals 3.6 GHz and above. If the start frequency is set to 3.6 GHz and above, the analyzer displays only the High Band signal path. If the analyzer start frequency is below 3.6 GHz and the Stop frequency is set above 3.6 GHz, the analyzer will start sweeping in Low Band up to 3.6 GHz, and then automatically switch to the high band path above 3.6 GHz.

The analyzer has an internal 4.8 GHz amplitude reference signal that is used to verify the high band path. This 4.8 GHz calibrator is used when the analyzer performs many of the internal alignment routines. Therefore, the functionality of the 4.8 GHz calibrator and high band path are critical to passing alignments.

Equipment needed:

Spectrum Analyzer with frequency range to at least 14 GHz

Signal source with frequency range to at least the maximum frequency of the analyzer under test

Directional coupler or power splitter with frequency range at least to 9 GHz

2 each, quality SMA or 3.5 mm cables

90° SMA (m) to SMA (f) adapter

MMCX (f) to SMA (f) cable

SMA (f) to SMA (f) adapter

SMA (m) to SMA (m) adapter

NOTE The expected signal power levels in the following procedures do not account for the loss from cables and adapters used with the external equipment. It is recommended that a power meter be used to verify the additional loss.

1. With the instrument off, remove the outer cover and the top brace. See Chapter 18, “Assembly Replacement Procedures,” in this manual. Then turn the instrument on and allow it to complete its full boot up process to Signal Analyzer mode.

IMPORTANT Turn off auto align by pressing **System**, **Alignments**, **Auto Align**, **Off**.

2. Enable and use the internal 4.8 GHz, –28 dBm calibrator signal as a reference for troubleshooting by pressing **Mode Preset**, **Input/Output**, **Input**, **RF Calibrator**, **4.8 GHz** on the analyzer.

3. Now press **FREQ**, **Center Frequency**, **4.8 GHz**, **Span**, **1 MHz**, **Peak Search**. The 4.8 GHz reference signal should measure –28 dBm ± 2 dB on the analyzer display. If the power level is within tolerance, the 3.6 GHz to 13.6 Ghz path is functioning correctly at 4.8 Ghz.
4. If the power level is incorrect, change the 4.8 GHz RF Calibrator to the 50 MHz RF calibrator and set the analyzer center frequency to 50 MHz so it is analyzing in low band. Since several of the same signal path components are shared between high band and low band, determining if the problem appears in both paths is helpful. The 50 MHz reference signal should measure –25 dBm ± 2 dB. If this power level is also incorrect, skip to step 8.
5. If the power level at 50 MHz is within tolerance, continue the high band check. Select the 4.8 GHz RF calibrator and set the analyzer center frequency to 4.8 GHz again, then, press **Span**, **Zero Span**. Disconnect cable W16 at A13A1J7, 322.5 MHz output on the A13 Front End Assembly. See Figure 6-1 for connector location.

   Connect A13A1J7 output to a functioning spectrum analyzer and verify the 322.5 MHz intermediate frequency is measuring –31 ± 4 dB as shown in Figure 6-5.

Figure 6-5 322.5 MHz Intermediate Frequency

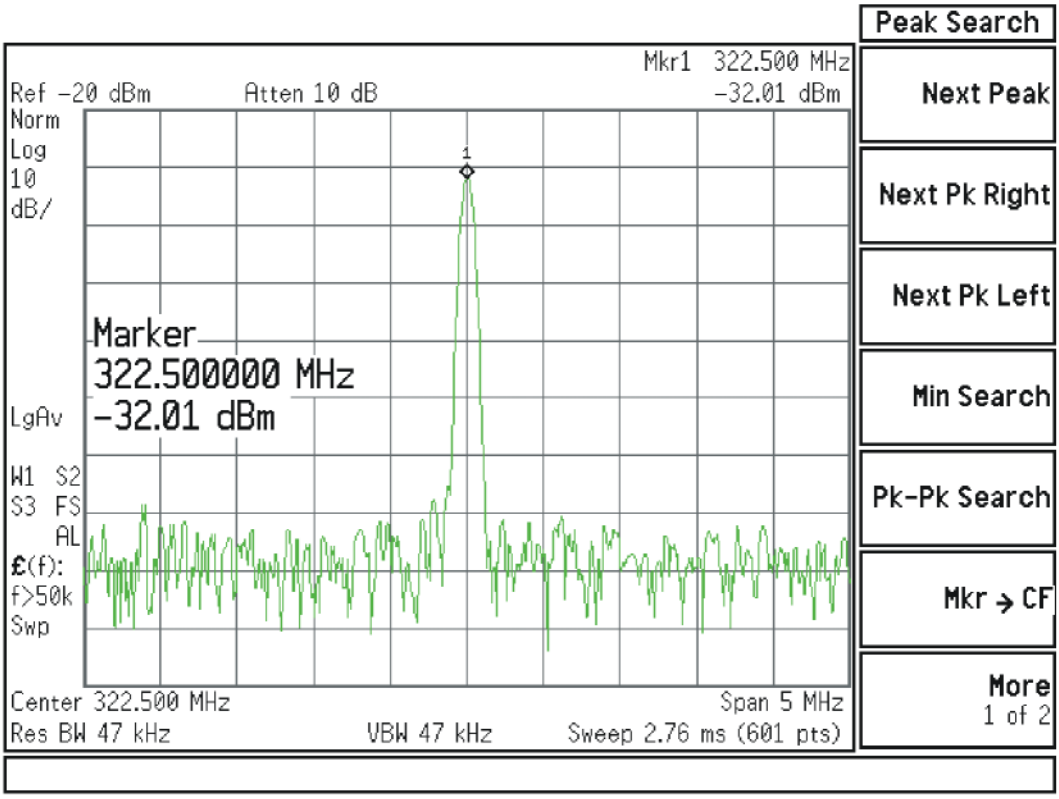

6. The 4.8 GHz reference signal verifies High Band #1 signal path (3.6 GHz to 13.6 GHz), which utilizes a different mixer than High Band #2 signal path (13.6 GHz to 26.5 GHz) in the A13 Front End Assembly. Disable the 4.8 GHz RF calibrator signal by pressing **Input/Output**, **Input**, **RF Calibrator**, **None** and connect an external signal source to the input of the analyzer under test. Set the frequency of the signal source and analyzer under test to a frequency within the High Band #2 range, and the power level of the source to -28 dBm. Verify the 322.5 MHz intermediate frequency is still measuring within tolerance on the external spectrum analyzer. If the power level is correct in one High Band path but not the other, suspect the A13 Front End Assembly.
7. If the power level is correct for High Band #1 and #2, the signal path from the A9 Input Attenuator A to the A13 Front End Assembly is operating correctly in high band. Reconnect the W16 cable to A13A1J7 and troubleshoot the IF path assemblies.

NOTE

Flatness issues or power level problems at other input frequencies above 3600 MHz may exist. This type of problem can be diagnosed using an external source to verify performance.

8. If this power level is incorrect verify the following assemblies using the 4.8 GHz internal calibrator signal.
   - A9 Input Attenuator A and A10 Input Attenuator B
   - A11 Low Band Switch
   - A16 Reference Assembly (4.8 GHz calibrator)
   - A20 YTO and A14 Synthesizer (1st LO)
   - A12 YTF Preselector
   - A13 Front End Assembly
   - SW3 Low Noise Path Switch (Option LNP)
   - SW1 & SW2 Microwave Preselector Bypass Switches (Option MPB)

   Proceed to "Troubleshooting a High Band Problem" on page 143.

NOTE

If the power level was also incorrect when switching the calibrator signal to 50 MHz, start from the beginning with the RF Calibrator Verification. If it was incorrect only with the 4.8 GHz calibrator signal, start with the A11 Low Band Switch Verification.

Troubleshooting a High Band Problem

In order to gain access to the front end components, remove the front frame assembly, but leave the ribbon cable connected so you can still control the instrument. Then remove the RF Bracket on the right side of the chassis. Refer to the removal procedures in Chapter 18, “Assembly Replacement Procedures.”

Refer to the RF/µW High Band Path #1 Block Diagram in Chapter 15, “Block Diagrams,” and follow the instructions in the settings box. If the instrument has Option EP0 installed, refer to the "mmW High Band Path #1 Opt EP0 and B5X Block Diagram" when troubleshooting the LO.

The internal RF calibrator is used for several verification procedures, 50 MHz for low band path and 4.8 GHz for high band path. To enable the internal 4.8 GHz, –28 dBm calibrator signal press **Input/Output**, **Input**, **RF Calibrator**, **4.8 GHz**.

4.8 GHz RF Calibrator Signal Verification

First verify the RF Calibrator signal is correct. On the A16 Reference assembly, disconnect semi rigid cable W3 from A16J701 and measure A16J701 with an external spectrum analyzer. See Figure 6-3 for location of connector. With the internal calibrator enabled, expected signal is 4.8 GHz at –28 dBm ± 0.5 dB. If signal level is incorrect, suspect A16 Reference assembly is faulty, or the 4.8 GHz calibrator amplitude requires adjustment using the field calibration software.

Figure 6-6 A16 Reference Assembly

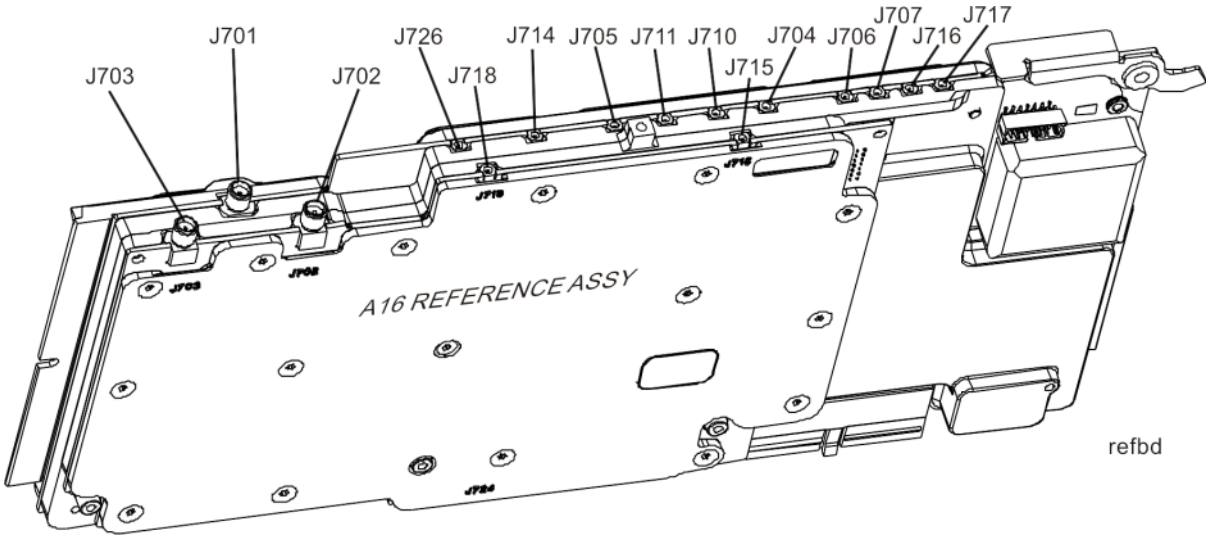

NOTE Before proceeding with the next verification procedure, be sure to reconnect any disconnected cables and restore the prescribed settings from the block diagram, if changed.

A9 Input Attenuator A and A10 Input Attenuator B Verification

To perform input attenuator tests, connect an external signal source set to 4.8 GHz and –25 dBm (with output initially **Off**) to the RF input connector of the analyzer under test. Then disconnect the semi-rigid cable W6 (W52 for instruments with Option LNP) from the A10 Input Attenuator B output port and connect an external spectrum analyzer to the attenuator output. See Figure 6-7 for location of connector. This setup will be used to verify that the calibrator switch and attenuator steps are operating properly.

Figure 6-7 RF Section

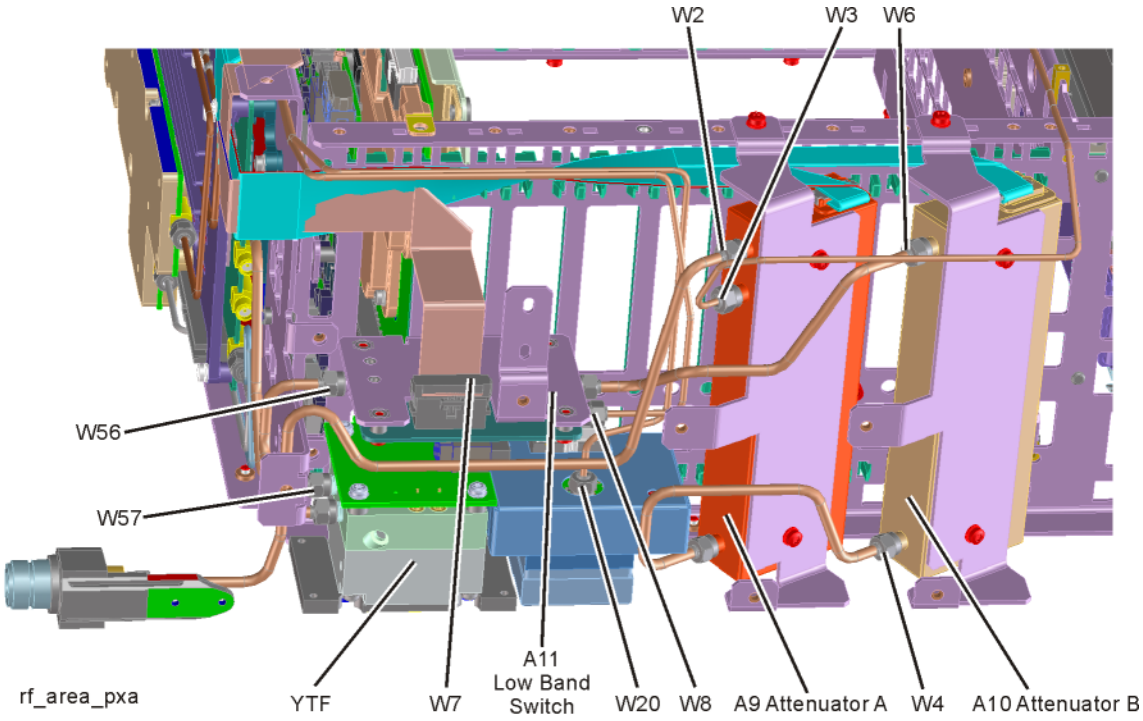

Calibrator Switch Test

To verify calibrator switch operation, measure the calibrator signal with the external spectrum analyzer connected to the A10 Attenuator output. Default attenuation at boot up is 10 dB, so the expected signal is 4.8 GHz at –35 dBm ± 0.5 dB.

If the signal is incorrect, press **Input/Output**, **Input**, **RF Calibrator**, **Off** to disable the internal calibrator and then turn the external signal source RF output **On**. If the signal level is still incorrect, proceed with the Attenuator Step Test. However, if the signal level at the attenuator output is now correct, suspect the A9 Attenuator cal switch or a faulty control signal from the A15

Front End Controller assembly. Inspect the ribbon cable W5 controlling the attenuators for damage, then refer to Chapter 8, "Front End Controller," to verify that the A9 attenuator is being controlled properly before replacing it.

Attenuation Step Test

Set the signal source connected to the analyzer input port to 0 dBm. On the analyzer under test, press **Amplitude**, **Attenuation**, **Mech Atten 0 dB** to change input attenuation to 0 dB. The external spectrum analyzer connected to A10 Attenuator output port should indicate a 0 dBm level. Change the input attenuation on the analyzer under test to 2 dB.

See the chart below for expected measurement values at the A10 Attenuator output port.

Table 6-3

Analyzer Under Test Attenuator Setting (dB)	Power at A10 Output Port	Input Attenuator Being Tested
0	0 dBm (reference)	Both set to through path
2	–2	A9
4	–4	A9
6	–6	A10
8	–8	A9 set to 2 dB, A10 set to 6 dB
10	–10	A10
20	–20	A10
30	–30	A10
40	–40	A10
50	–50	A10
60	–60	A10
70	–70	A9 set to 4 dB, A10 set to 66 dB

A12 YTF Preselector and A13 Front End Input Verification

Turn on the 4.8 GHz calibrator signal and disconnect cable W15 from A13A1J9. See Figure 6-8 for location of connector. Loosen the other end of W15 if possible to avoid damaging the cable. Attach a right angle sma adapter to W15 and measure the input to the A13 Front End with an external spectrum analyzer.

Figure 6-8 A13A1J9 Location

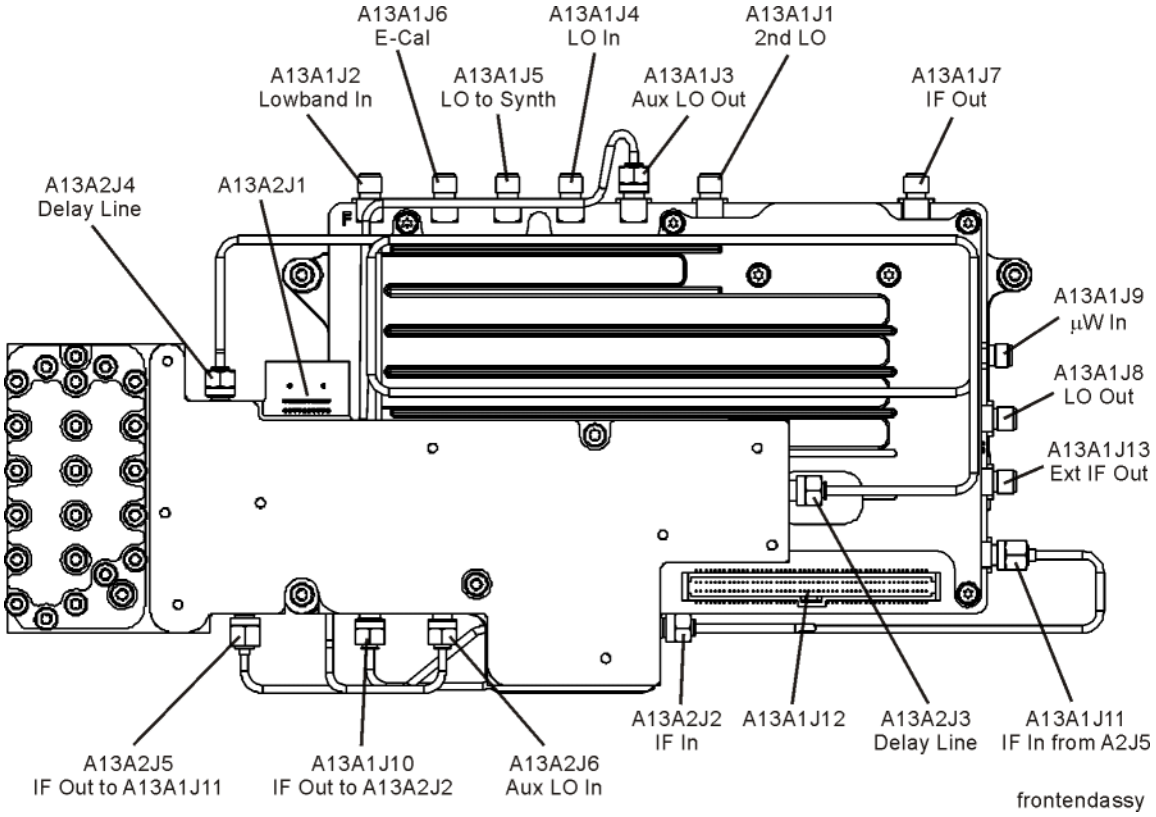

Expected signal is 4.8 GHz at –51 dBm ± 4 dB. The tolerance is large because the A12 YTF (microwave preselector) loss varies between devices, and the YTF may not be perfectly aligned, or the frequency response adjustment may be required.

If the signal level is incorrect, and Option MPB (Microwave Preselector Bypass) is installed, press **Amplitude**, **Signal Path**, **uW Path Control**, **uW Preselector Bypass**. If the signal level is now –52 dBm, suspect the A12 YTF is out of adjustment or faulty.

To perform the YTF alignment, reconnect W15 cable, and press **System**, **Alignments**, **More**, **Advanced**, **Characterize Preselector**. The routine may take several minutes to align the YTF. Display the 4.8 GHz calibrator signal on screen as explained in the quick check section. If the signal level is still incorrect, suspect all assemblies, cables, switches and the A16 Reference calibrator signal between the W15 cable and the input to the A9 Attenuator.

NOTE

For additional methods on troubleshooting the YTF, refer to the "Verifying A12 YTF Preselector Tune Output" section in Chapter 8, "Front End Controller."

If Option MPB is not installed, remove A10 Input Attenuator B output cable and measure the output power. Expected signal is 4.8 GHz –38 dBm. See Figure 6-7 for location of attenuator. If the attenuator output signal is correct suspect the A11 Low Band Switch, and if Option MPB or LNP is installed, suspect switches SW1, SW2, and SW3.

Also, suspect the switching signals from the A15 Front End Controller. The control signals for the switches, as well as for the YTF Preselector tuning, are explained in Chapter 8, "Front End Controller."

First LO Level Verification

The first LO is the A20 YTO assembly. The first LO is phased locked by the by the A14 Synthesizer assembly, which also controls the YTO with tuning signals via ribbon cable W23. If Option EP0 is installed, the LO signal will be alternatively supplied by the A14 DDS Synthesizer depending on analyzer settings and modes, but not in Swept SA mode.

To assure the first LO is tuned to the correct frequency and power, measure the A13 Front End assembly at A13A1J3 when the analyzer center frequency is 4.8 GHz. See Figure 6-8 for location of connector. This test port is chosen because removing cable W19 will not cause the analyzer LO phase lock loop to unlock for instruments with Option EP1 installed, which would affect the LO frequency measurement.

The LO signal should measure 5122.5 MHz at +9 dBm ± 3 dB if Option EP1 is installed, or 0 dBm ± 3 dB with Option EP0.

If the signal level is incorrect, measure the signal coming from the A20 YTO at A13A1J4 (EP1) or at A14J2 (EP0). In order to measure this signal and avoid an LO Unlock, you will need to install a directional coupler. A power splitter can be used if a coupler is not available, but sufficient power might not reach the assembly input. Connect the input of the device to the end of cable W20 (EP1)/W83 (EP0) that was disconnected from A13A1J4/A14J2, using a 90° (elbow) SMA adapter. Connect the main output or one arm of the device to A13A1J4/A14J2 using an appropriate SMA adapter. Connect the external spectrum analyzer to the coupled output or other arm of the device. Set the measuring spectrum analyzer reference level offset to the coupling factor of the device, typically -10 dB and -6 dB for Keysight couplers and splitters, respectively.

The signal should be 5122.5 MHz at +10 dBm ± 3 dB.

If the signal level is incorrect, suspect the A20 YTO, A16 Reference, or the interconnect cables. Refer to the chapters on these assemblies for troubleshooting steps.

With Option EP1 installed, part of the first LO phase lock loop is from A13A1J5, Synth Out, back to the A14 LO Synthesizer. This too can be measured to verify the first LO from A13 Front End Assembly. When measuring A13A1J5, the coupler or splitter must also be used. The expected signal level is 5122.5 MHz at +10 dBm ± 3 dB.

A13 Front End Assembly Verification

NOTE

The A13 Front End assembly is shown as A13A1 and A13A2 for troubleshooting clarification. However, A13A1 and A13A2 are not separately replaceable. The entire A13 assembly must be replaced.

Many portions of the Front End Assembly have been verified earlier in the High Band troubleshooting process outlined above.

The input signal level was measured on W15 as part of the A13 Front End Input Verification.

The output signal level was measured at A13A1J7 during the quick check to verify the High Band signal path.

The LO input at W20, and the LO outputs were tested when performing the First LO Verification.

High Band Preamp Verification (Option P08, P13, P26)

If a preamp option listed above is installed, the High Band preamp can be verified as follows:

View the 4.8 GHz calibrator signal on screen. Press **AMPTD**, **More**, **Internal Preamp**, **Full Range** to activate the preamp.The expected operation is the signal level will not change more than +/- 0.5 dB and the noise floor will increase due to the fact the input attenuation was automatically increased.

If the amplitude error when switching the preamp on and off is greater than 0.5 dB, assure that any other internal alignment failures are resolved since the System Gain alignment must run before optimum performance is possible. The amplitude error could be caused by poor frequency response, and performing the high band frequency response adjustment (using the calibration software) will adjust the preamp on, high band path. Assure you have evaluated all causes including A15 Front End Controller switching problems, before you replace the Front End assembly.

SW3 Low Noise Path Switch Verification (Option LNP)

If Option LNP is installed, the Low Noise Path Switch 3 can be verified as follows:

Turn on the 4.8 GHz calibrator signal and press **Amplitude**, **Signal Path**, **uW Path Control**, **Low Noise Path Enable** key. The Low Noise Path will be enabled only after the following conditions are met:

1. The start frequency must be 3.6 GHz or greater.
2. The high band preamp (option P08, P18, P26) must be Off.

When Switch 3 changes state, you will hear a click. The amplitude of the displayed signal should not change.

SW1 and SW2 Microwave Preselector Bypass Switch Verification (Option MPB)

If Option MPB is installed, the Microwave Preselector Bypass Switches 1 and 2 can be verified as follows:

Assure start frequency is 3.6 GHz or greater. Press **Amplitude**, **Signal Path**, **uW Path Control**, **uW Preselector Bypass**.

When the bypass switches, Switch 1 and Switch 2, change state, you will hear a click. Depending on the signal source connected, you may see many “signals” appear on screen because without preselection, the analyzer will display images and multiples. The real input signal should not change amplitude when you switch the uW Preselector Bypass on and off.

NOTE

For additional methods on troubleshooting the LNP and MPB switches, refer to Chapter 8, “Front End Controller.”

Keysight Technologies
N9030B PXA Signal Analyzer

Service Guide

7 RF Input Section (Millimeter-Wave)

What You Will Find in This Chapter

The following information is found in this chapter:

1. Theory of operation of the RF section.
2. Isolating the cause of an hardware problem by verifying the functionality of assemblies in the RF section signal path.

NOTE Each section describes how the assembly works and gives information to help you troubleshoot the assembly. Each description covers the purpose of the assembly, describes the main components, and lists external connections to the assembly.

The following sections are found in this chapter:

RF Section Description on page 153

Signal Path Overview on page 153

A9 Input Attenuator A on page 156

A10 Input Attenuator B on page 156

A11 Low Band Switch on page 156

A12 YTF Preselector on page 157

A20 YTO on page 157

A13 RF Front End Assembly on page 157

A15 Front End Control Assembly on page 160

SW3 Low Noise Path Switch (Option LNP) on page 160

SW4 Microwave Preselector Bypass Switch (Option MPB) on page 160

Troubleshooting on page 161

Quick Check to Verify the Low Band Signal Path on page 161

Troubleshooting a Low Band Problem on page 164

Quick Check to Verify High Band RF Path on page 172

Troubleshooting a High Band Problem on page 175

RF Section Description

This section covers only those optional frequency ranges listed below for the N9030B Signal Analyzer.

– Option 544, 44 GHz Frequency Range

– Option 550, 50 GHz Frequency Range

Signal Path Overview

The RF input signal can be routed through four different front end signal paths. These various paths are switched in and out based on where the signal analyzer center frequency is tuned.

1. Low band RF path is used when the input frequency is ≤ 3600 MHz
2. High band RF path #1 is used when the input frequency is > 3.6 GHz to 17.1 GHz
3. High band RF path #2 is used when the input frequency is > 17 GHz to 34.5 GHz
4. High band RF Path #3 is used when the input frequency is > 34.4 GHz to 50 GHz

The RF section is designed to convert RF input signals to an intermediate frequency that is present at the RF output of the A13 Front End assembly. This intermediate frequency (IF) depends on installed options and the IF path selected (See Figure 7-1).This chapter will assume the default operation in Spectrum Analyzer mode. Therefore the IF frequency will be 322.5 MHz.

Table 7-1

IF Path	IF	Mode
10 MHz (standard)	322.5 MHz	Spectrum Analyzer or IQ Analyzer
25 MHz (Option B25)	322.5 MHz	IQ Analyzer
40 MHz (Option B40)	250 MHz	IQ Analyzer
85 MHz (Option B85)	300 MHz	IQ Analyzer
160 MHz (Option B1X)	300 MHz	IQ Analyzer
255 MHz (Option B2X)	750 MHz	IQ Analyzer
510 MHz (Option B5X)	877.148 MHz	IQ Analyzer

The RF section is comprised of the following major assemblies:

- A9 Input Attenuator A
- A10 Input Attenuator B
- A11 Low Band Switch
- A12 YTF Preselector
- A20 YIG Tuned Oscillator
- A13 RF Front End Assembly - shown on the block diagram as A13A1 and A13A2, however the entire A13 assembly must be replaced.
- A15 Front End Controller
- SW3 Low Noise Path Switch (Option LNP)
- SW4 Microwave Preselector Bypass Switch (Option MPB)

1. **RF input frequencies < 3600 MHz** route through the low band path. Refer to the mmW Low Band Path Block Diagram in Chapter 15 for details.

   The RF input signal level can be optimized by the A9 Input Attenuator A and/or A10 Input Attenuator B. The A11 Low Band Switch assembly contains a limiter that offers added protection for the mixer, and routes the input signal to the low band input of the A13 RF Front End assembly. There are (3) different signal paths on the input of the RF Front End assembly that the signal can be routed through depending on installed options and front panel settings.

   - Electronic Attenuator path, 0-24 dB (Option EA3)
   - Low Band Preamplifier path, 20 dB nominal gain (Any preamp option)
   - Direct to Mixer #1

NOTE

The RF input signal can route through the Electronic Attenuator section or the Preamplifier, but not both. All RF input frequencies < 3600 MHz go to Mixer #1.

The RF input signal is then mixed with the 1st LO from the A20 YTO assembly to a 1st intermediate frequency of 5122.5 MHz. Since the RF input signal is <3600 MHz for low band, this RF input signal is upconverted in Mixer #1 to the 1st IF. This 1st IF signal is then downconverted in Mixer #2 using the 4800 MHz 2nd LO generated on the A16 Reference assembly to a 2nd intermediate frequency of 322.5 MHz (5122.5 MHz (1st IF) – 4800 MHz (2nd LO)). The 2nd IF output is at A13A1J7. This signal path is used for all frequency range options when the RF input frequencies are < 3600 MHz. The control voltages and biasing for these assemblies come from the A15 Front End Controller.

2. **RF input frequencies from 3.6 GHz to 17.1 GHz** go through the high band path. Refer to the mmW High Band Path #1 Block Diagram in Chapter 15 for details.

   The input signal level can be optimized by Input Attenuator A and/or Input Attenuator B. The Low Band Switch assembly routes the signal through the A12 YTF Preselector. If one of the optional high band preamps is licensed, the signal can be routed through the preamp. The A15 Front End Controller provides switching signals.

   The Low Band Switch assembly performs the following tasks:

   - Provides a limiter that offers added protection for the mixer and optional preamp.
   - Contains the high band preamp.
   - Routes the input signal to either the low band input of the A13 Front End assembly or to the A12 YTF Preselector. If Options LNP or MPB are installed, the signal is routed through switches.

   The high band input switch in the Front End Assembly routes the RF input signal to Mixer #2, where it mixes with the LO and provides a 1st intermediate frequency of 322.5 MHz. The 322.5 MHz IF output is at A13A1J7. The control voltages and biasing are provided by the A15 Front End Controller. The LO is doubled for tuned frequencies > 8.4 GHz in this path.

3. **RF input frequencies from 17.1 GHz to 34.5 GHz** go through the high band path. Refer to the mmW High Band Path #2 Block Diagram in Chapter 15 for details.

   The signal path for 17.1 GHz to 34.5 GHz operation is almost the same as the 3.6 GHz to 17.1 GHz path. The only difference is that Mixer #3 is used in this path. The LO is doubled for all tuned frequencies in this path.

4. **RF input frequencies from 34.5 GHz to 50 GHz** go through the high band path. Refer to the mmW High Band Path #3 Block Diagram in Chapter 15 for details.

   The signal path for 34.5 GHz to 50 GHz operation is almost the same as the 3.6 GHz to 17.1 GHz path. The only difference is that Mixer #4 is used in this path. The LO is doubled for all tuned frequencies in this path.

Low Band Frequency Mixing Equations

For the 1st IF at Mixer #1:

IF1 = LO1 – RF

RF is the input signal at the SA

LO1 is the 1st LO signal from the A20 YTO assembly

For the 2nd IF at Mixer #2:

IF2 = IF1 – LO2

1F1 is the 1st IF signal from Mixer #1

LO2 is the 2nd LO signal from the A16 Reference assembly

High Band Frequency Mixing Equations

For input frequencies from 3.6 GHz to 8.4 GHz:

IF = LO x N – RF

For input frequencies from 8.4 GHz to 50 GHz:

IF = LO x 2 x N – RF

RF is the input signal at the SA

LO is the LO signal from the A20 YTO assembly

N is the harmonic mixing mode

N = 1 for 3.6 GHz to 17.1 GHz

N = 2 for 17.1 GHz to 34 GHz

N = 4 for 34 GHz to 50 GHz

A9 Input Attenuator A

This assembly has two 2 dB attenuator sections, a 6 dB attenuator section, and a cal signal input port.

A10 Input Attenuator B

This assembly has a total of 60 dB of attenuation to control the signal level into the Low Band Switch assembly. There is a 10 dB, 20 dB, and 30 dB section in the A10 assembly. Total input attenuation with the A9 and the A10 combined is 70 dB in 2 dB steps.

A11 Low Band Switch

The A11 Low Band Switch assembly operates across the entire frequency range of the analyzer. The switch has 3 main functions:

- Switch RF input frequencies from 3 Hz to < 3.6 GHz RF Output to the A13 RF Front End Assembly.
- Switch input frequencies from 3.6 GHz to 50 GHz Millimeter-Wave RF Output to the A12 YTF Preselector.

– Contains optional high band preamplifier, which has a typical gain of 35 dB to 40 dB and a noise figure from 9 to 23 dB up to 50 GHz.

NOTE

If the stop frequency is set to 3.6 GHz, the analyzer displays only the Low Band signal path. If the analyzer stop frequency is set above 3.6 GHz and the start frequency is set below 3.6 GHz in Spectrum Analyzer mode, the analyzer will sweep up to 3.6 GHz in low band and then automatically switch to the high band path above 3.6 GHz.

A12 YTF Preselector

The A12 YTF Preselector is used for input frequencies greater than 3.6 GHz. Signals less than 3.6 GHz bypass the YTF assembly and are routed to the low band input of the A13 RF Front End Assembly. The YTF Preselector is a YIG tunable bandpass filter whose main purpose is to track the input signal and to filter out unwanted spurious or image response signals. The YTF Preselector has a 3 dB bandwidth greater than 40 MHz and an insertion loss of ~ 6.5 dB.

The preselector requires centering for optimum amplitude accuracy. The Auto Align routine will perform a rough centering during the preselector two point tuning algorithm. However, when troubleshooting, press **Amplitude**, **Preselector Center** to manually center the preselector.

A20 YTO

The A20 YTO assembly contains a YIG tunable oscillator that provides the 1st LO signal required for the frequency conversion. With Option EP1, the A20 YTO provides this signal directly to the A13 Front End Assembly. With Option EP0, the LO signal is routed first to the A14 Synthesizer to be phase locked with the DDS before being sent to the Front End Assembly. The 1st LO has a frequency range from 3.80 to 8.73 GHz. The output power is +13 to +18 dBm. In order to maximize the conversion efficiency and avoid LO unlock, sufficient LO power must be supplied.

A13 RF Front End Assembly

This assembly consists of two circuit boards, the A13A1 Front End and the A13A2 Switched Filter, that are not separately replaceable. The entire A13 assembly must be replaced. See Figure 7-1.

Figure 7-1 A13 RF Front End Assembly View from Front Panel

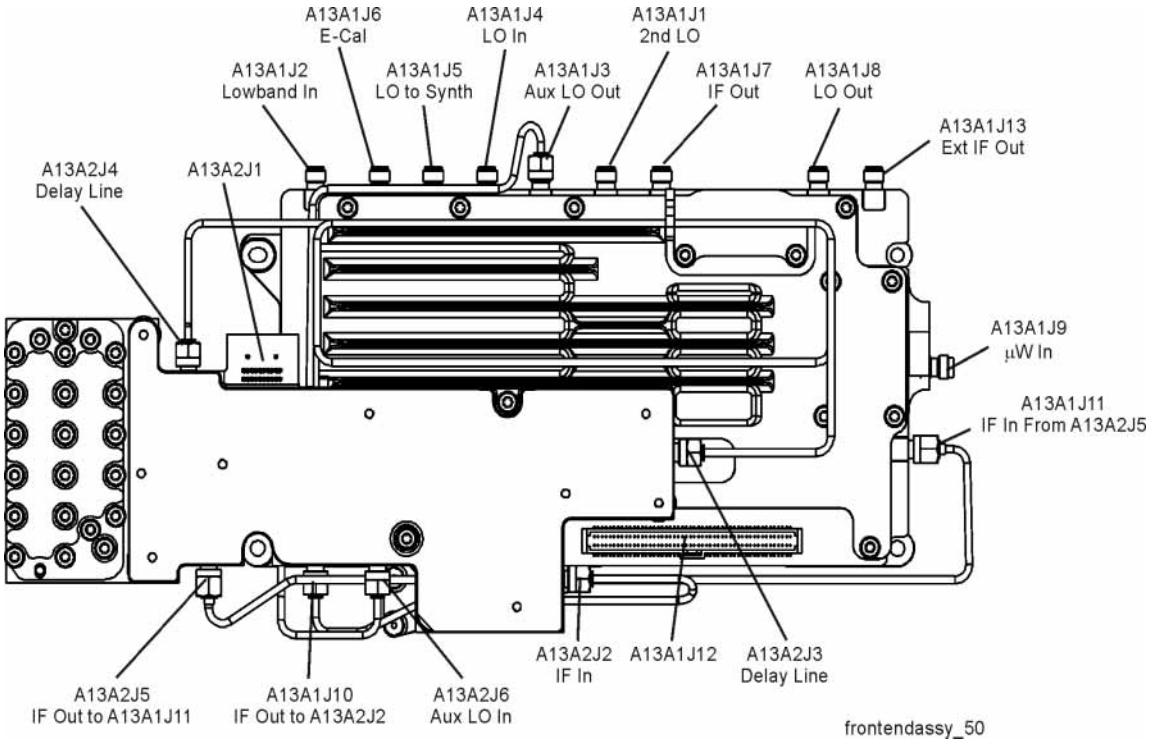

The A13 Front End Assembly provides a variety of functions for the instrument, which include:

Low Band (3 Hz to <3.6 GHz)

- Input Low-pass filter
- Optional Electronic Attenuator (0-24 dB)
- Optional Low Band Preamplifier and Limiter
- Mixer #1 for 1st IF (5122.5 MHz)
- 1st IF Amplifier
- Switched IF Bandwidth Filters (A13A2)
- LO and IM nulling (A13A2)
- Mixer #2 for 2nd IF (322.5 MHz)

High Band (3.6 GHz to 50 GHz)

- Input Amplifier
- Selectable Mixers for 1st IF (322.5 MHz)
    - Mixer #2 (RF input signals 3.6 GHz to 17.1 GHz)
    - Mixer #3 (RF input signals 17 GHz to 34.5 GHz)
    - Mixer #4 (RF input signals 34.4 GHz to 50 GHz)

Miscellaneous

- LO Distribution
- LO Doubler
- External Mixing Diplexer

A15 Front End Control Assembly

Provides the correct biasing and switch control logic to the following RF assemblies and circuits:

- A9 Input Attenuator A
- A10 Input Attenuator B
- A11 Low Band Switch
- SW3 Low Noise Path Switch (Option LNP)
- A12 YTF Preselector (Input signals > 3.6 GHz)
- SW4 Microwave Preselector Bypass Switch (Option MPB)
- A13 Front End Assembly including the A13A2 switched filter
- (Optional) High Band Preamplifier
- (Optional) Low Band Preamplifier
- Electronic Attenuator (Option EA3)

NOTE Refer to Chapter 8, “Front End Controller,” for detailed descriptions and troubleshooting procedures.

SW3 Low Noise Path Switch (Option LNP)

The Low Noise Path allows the A11 Low Band Switch assembly to be bypassed via Switch 3, improving sensitivity in the high band path.

SW4 Microwave Preselector Bypass Switch (Option MPB)

The MPB Path allows the A12 YTF Preselector to be bypassed via Switch 4, improving amplitude accuracy and enabling wider IF bandwidth in the high band path.

Troubleshooting

Quick Check to Verify the Low Band Signal Path

Refer to the mmW Low Band Path Block Diagram in Chapter 15.

The Low Band signal path (sometimes referred to as Band 0) is used for all signals less than 3.6 GHz when the analyzer is used in normal operation. If the stop frequency is set to 3.6 GHz, the analyzer displays only the Low Band signal path. If the analyzer stop frequency is set above 3.6 GHz and the start frequency is set below 3.6 GHz, the analyzer will sweep up to 3.6 GHz in low band and then automatically switch to the high band path above 3.6 GHz.

The analyzer has an internal 50 MHz amplitude reference signal that is used to verify the low band path. This 50 MHz calibrator is used when the analyzer performs many of the internal alignment routines. Therefore, the functionality of the 50 MHz calibrator and low band path are critical to passing alignments.

Equipment needed:

Spectrum analyzer with frequency range to at least 8 GHz

Signal source with frequency range to at least 3.6 GHz

Directional coupler or power splitter with frequency range at least to 9 GHz

2 each, quality SMA or 3.5 mm cables

90° SMA (m) to SMA (f) adapter

MMCX (f) to SMA (f) cable

SMA (f) to SMA (f) adapter

SMA (m) to SMA (m) adapter

3.5mm (f) to 2.4mm (m) adapters (2 required)

NOTE The expected signal power levels in the following procedures do not account for the loss from cables and adapters used with the external equipment. It is recommended that a power meter be used to verify the additional loss.

1. With the instrument off, remove the outer cover and the top brace. See Chapter 18, “Assembly Replacement Procedures,” in this manual. Then turn the instrument on and allow it to complete its full boot up process to Spectrum Analyzer mode.

IMPORTANT Turn off auto align by pressing **System**, **Alignments**, **Auto Align**, **Off**.

2. Enable and use the internal 50 MHz, -25 dBm calibrator signal as a reference for troubleshooting by pressing **Mode Preset**, **Input/Output**, **Input**, **RF Calibrator**,
50 MHz on the analyzer.

3. Now press **FREQ**, **Center Frequency, 50 MHz**, **Span**, **1 MHz**, **Peak Search**. The 50 MHz reference signal should measure 50 MHz @ –25 dBm ± 2 dB on the analyzer display. If the power level is within tolerance, the low band path is functioning correctly at 50 MHz.

4. If the power level is incorrect, change the 50 MHz RF Calibrator to the 4.8 GHz RF Calibrator and set the analyzer center frequency to 4.8 GHz so it is analyzing in high band. Since several of the same signal path components are shared between low band and high band, determining if the problem appears in both paths is helpful. The 4.8 GHz reference signal should measure –28 dBm ± 2 dB. If this power level is also incorrect, skip to step 7.

5. If the power level at 4.8 GHz is within tolerance, continue the low band check. Select the 50 MHz RF calibrator and set the analyzer center frequency to 50 MHz again, then, press **Span**, **Zero Span**. Disconnect the W16 cable from A13A1J7 on the Front End Assembly IF Out. See Figure 7-1 for connector location. Connect A13A1J7 output to an external spectrum analyzer and verify the 322.5 MHz intermediate frequency is measuring –22 dBm ± 3 dB using the same analyzer settings as in Figure 7-2.

Figure 7-2 322.5 MHz Intermediate Frequency

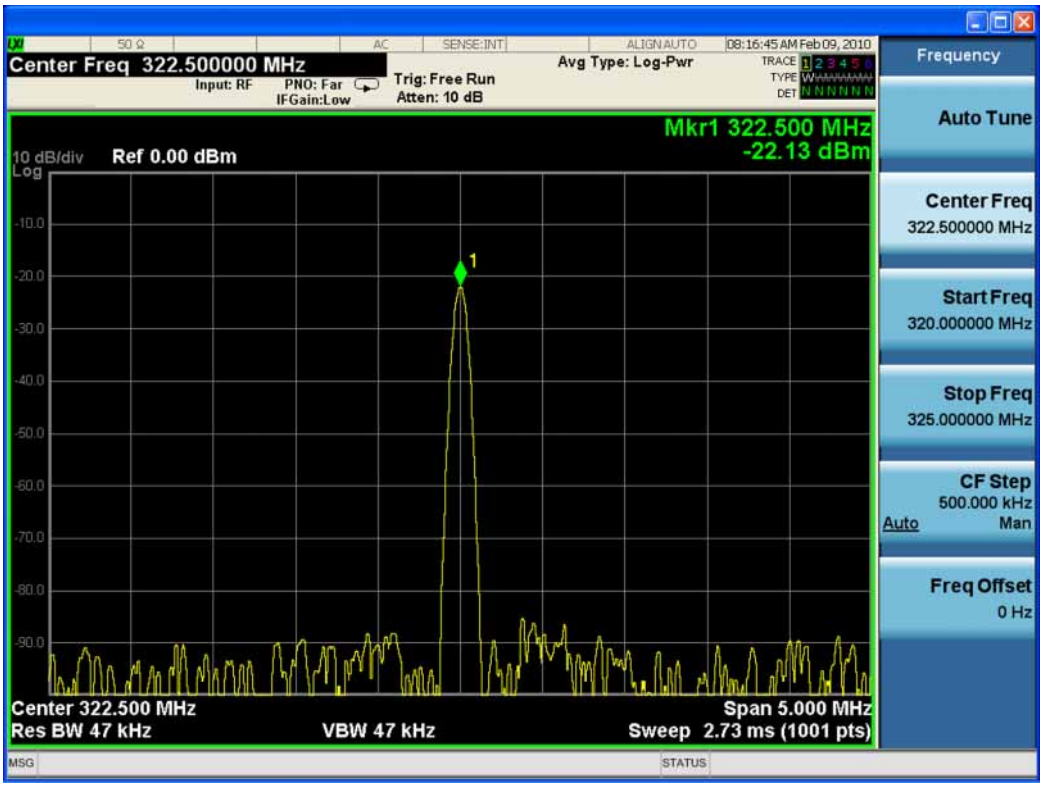

6. If this power level is correct, the signal path from the A9 Input Attenuator A to the A13 Front End Assembly is operating correctly in low band. Reconnect the W16 cable to A13A1J7 and troubleshoot the IF path assemblies.

NOTE

Flatness issues or power level problems at other input frequencies below 3600 MHz may exist. This type of problem can be diagnosed using an external source to verify performance.

7. If this power level is incorrect, the following assemblies need to be verified using the 50 MHz internal calibrator signal.
   - A9 Input Attenuator A and A10 Input Attenuator B
   - A11 Low Band Switch
   - A16 Reference Assembly (50 MHz calibrator, 2nd LO)
   - A20 YTO and A14 Synthesizer (1st LO)
   - A13 RF Front End Assembly

   Proceed to "Troubleshooting a Low Band Problem" on page 164.

NOTE

If the power level was still incorrect when switching the calibrator signal to 4.8 GHz, start from the beginning with the RF Calibrator Verification. If it was incorrect only with the 50 MHz calibrator signal, start with the A11 Low Band Switch Verification.

Troubleshooting a Low Band Problem

In order to gain access to the front end components, remove the front frame assembly, but leave the ribbon cable connected so you can still control the instrument. Then remove the RF Bracket on the right side of the chassis. Refer to the removal procedures in Chapter 18, “Assembly Replacement Procedures.”

Refer to the mmW Low Band Path Block Diagram in Chapter 15, “Block Diagrams,” and follow the instructions in the settings box. If the instrument has Option EP0 installed, refer to the "mmW Lowband Path Opt EP0 and B2X Block Diagram" instead.

The internal RF calibrator is used for several verification procedures, 50 MHz for low band path and 4.8 GHz for high band path. To enable the internal 50 MHz, –25 dBm calibrator signal press **Input/Output**, **Input**, **RF Calibrator**, **50 MHz**.

NOTE The Span is set to 0 Hz to stop the LO from sweeping and switches from automatically changing.

50 MHz RF Calibrator Signal Verification

First verify the RF Calibrator signal is correct. On the A16 Reference assembly, disconnect semi rigid cable W3 from A16J701 and measure A16J701 with an external spectrum analyzer. See Figure 7-3 for location of connector. With the internal calibrator enabled, expected signal is 50 MHz at –25 dBm ± 0.5 dB. If signal level is incorrect, suspect A16 Reference assembly is faulty, or the 50 MHz calibrator amplitude requires adjustment using the field calibration software.

Figure 7-3 A16 Reference Assembly

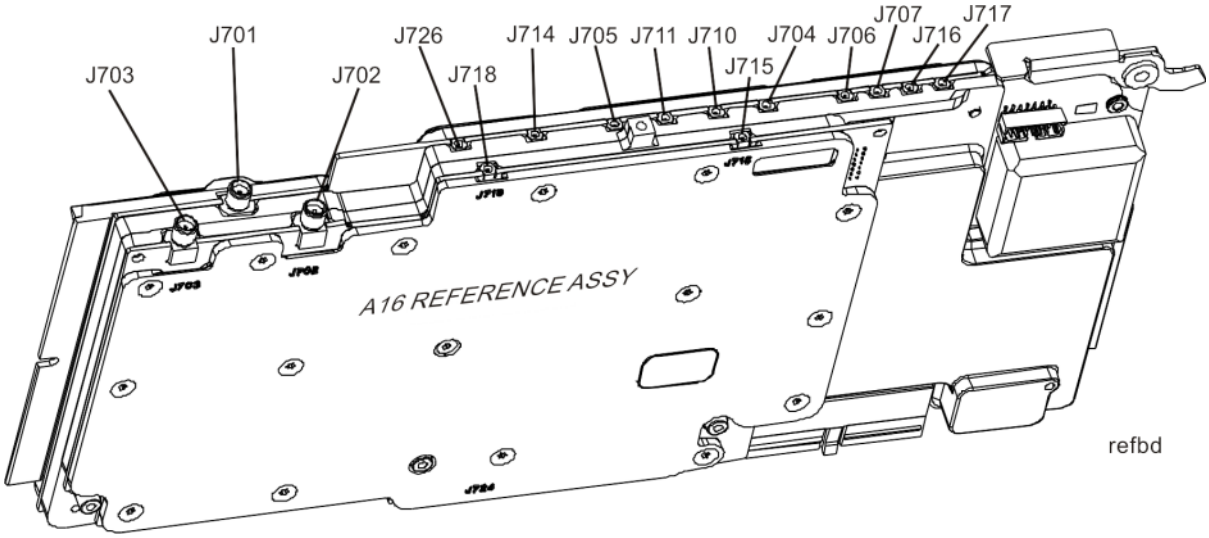

NOTE Before proceeding with the next verification procedure, be sure to reconnect any disconnected cables and restore the prescribed settings from the block diagram, if changed.

A9/A10 Input Attenuator Verification

To perform input attenuator tests, connect an external signal source set to 50 MHz and –25 dBm (with output initially Off) to the RF input connector of the analyzer under test. Then disconnect the semi-rigid cable W6 (W52 for instruments with Option LNP) from the A10 Input Attenuator B output port and connect an external spectrum analyzer to the attenuator output. See Figure 7-4 for location of connector. This setup will be used to verify that the calibrator switch and attenuator steps are operating properly.

Figure 7-4 RF Section

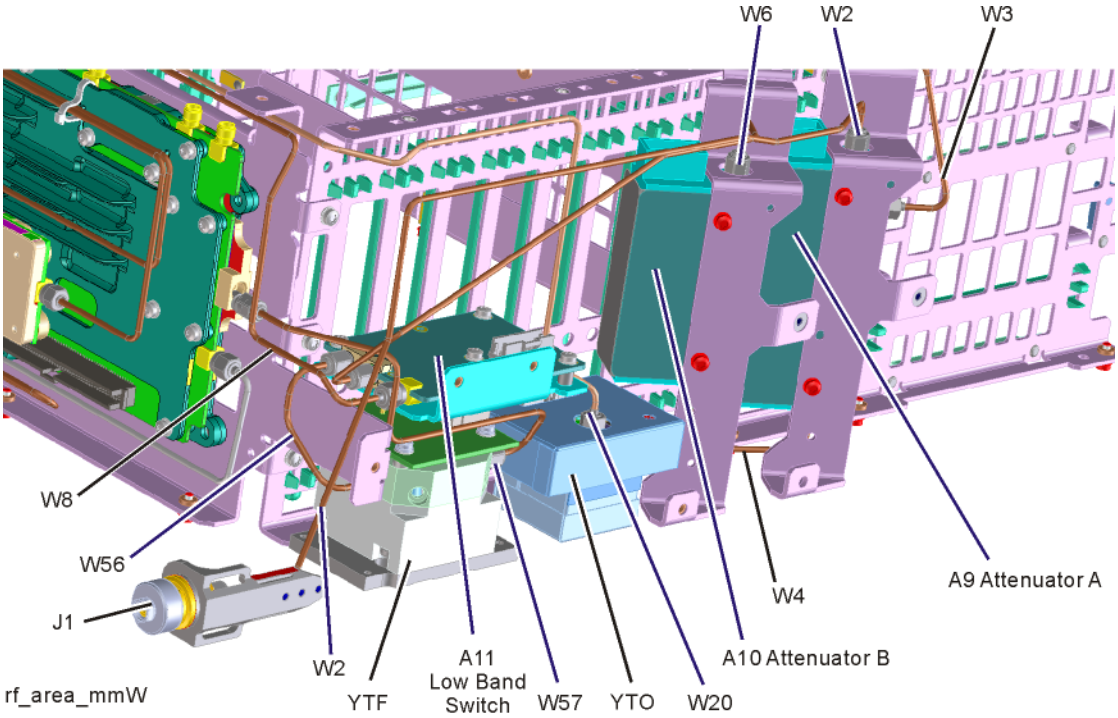

Calibrator Switch Test

To verify calibrator switch operation, enable and measure the calibrator signal with the external spectrum analyzer connected to the A10 Attenuator output. Default attenuation at boot up is 10 dB, so the expected signal is 50 MHz at –35 dBm ± 0.5 dB.

If the signal is incorrect, press **Input/Output**, **Input**, **RF Calibrator**, **Off** to disable the internal calibrator and then turn the external signal source RF output On. If the signal level is still incorrect, proceed with the Attenuator Step Test. However, if the signal level at the attenuator output is now correct, suspect the A9 Attenuator cal switch or a faulty control signal from the A15 Front End Controller assembly. Inspect the ribbon cable W5 controlling the attenuators for damage, then refer to Chapter 8, "Front End Controller," to verify that the A9 attenuator is being controlled properly before replacing it.

Attenuator Step Test

Set the signal source connected to the input port to 0 dBm. On the analyzer under test, press **Amplitude**, **Attenuation**, **Mech Atten 0 dB** to change input attenuation to 0 dB. The external spectrum analyzer connected to A10 Attenuator output port should indicate a 0 dBm level.

Refer to Table 7-2. Change the input attenuation to each of the Attenuator Setting values, and compare the external SA measurements with the corresponding expected Power values.

If a measurement is incorrect, suspect an attenuator according to the table, RF input connector, or the interconnect cables W2 and W4. See Figure 7-4 for their locations.

Table 7-2

Analyzer Under Test Attenuator Setting (dB)	Power at A10 Output Port (dBm)	Input Attenuator Being Tested (Options 544, and 550)
0	0 dBm (reference)	Both set to through path
2	–2	A9
4	–4	A9
6	–6	A9
8	–8	A9
10	–10	A10
20	–20	A10
30	–30	A10
40	–40	A10
50	–50	A10
60	–60	A10
70	–70	A9 set to 10 dB, A10 set to 60 dB

A11 Low Band Switch Verification

First, enable the 50 MHz internal calibrator signal. Disconnect W8 from A13A1J2. See Figure 7-1 for location of connector. Attach a right angle SMA adapter to W8 and measure the output of the Low Band Switch with an external spectrum analyzer. Expected signal is 50 MHz at –35.3 dBm since the A11 Low Band Switch and SW3 (Option LNP) have a few tenths of a dB loss.

If the signal level is incorrect, remove A10 Input Attenuator B output cable and measure the output power. Expected signal is 50 MHz at –35 dBm. See Figure 7-4 for location of attenuator. If the attenuator output signal is correct but the Low Band output at W8 is incorrect, suspect the A11 Low Band Switch, the interconnect cables, Switch 3 if Option LNP is present, or the control signals.

Refer to Chapter 8, "Front End Controller," for detailed descriptions and troubleshooting procedures for the control signals and LNP switch.

Second LO Level Verification

The second LO signal comes from the A16 Reference Assembly, routes to the A13 Front End Assembly, and is only used in Low Band.

To verify the second LO signal, disconnect W18 from A13A1J1 (see Figure 7-1), and connect an external spectrum analyzer to W18 using a right-angle SMA adapter. Alternatively, connect the external SA directly to A16J702 at the A16 Reference Assembly (see Figure 7-3). Set the external SA input attenuator to at least 20 dB to prevent overload. Expected signal is 4800 MHz at +10 dBm when a low loss test cable is used.

If the signal is incorrect, suspect the A16 Reference Assembly.

First LO Level Verification

The first LO is the A20 YTO assembly. The first LO is phased locked by the A14 Synthesizer assembly, which also controls the YTO with tuning signals via ribbon cable W23. If Option EP0 is installed, the LO signal will be alternatively supplied by the A14 DDS Synthesizer depending on analyzer settings and modes, but not in Swept SA mode.

To assure the first LO is tuned to the correct frequency and power, measure the A13 Front End assembly at A13A1J3 when the analyzer center frequency is 50 MHz. Refer to Figure 7-1 for connector locations. This test port is chosen because removing cable W19 will not cause the analyzer LO phase lock loop to unlock for instruments with Option EP1 installed, which would affect the LO frequency measurement.

The LO signal should measure 5172.5 MHz at +9 dBm ± 3 dB if Option EP1 is installed, or 0 dBm ± 3 dB with Option EP0.

If the signal level is incorrect, measure the signal coming from the A20 YTO at A13A1J4 (EP1) or at A14J2 (EP0). In order to measure this signal and avoid an LO Unlock, you will need to install a directional coupler. A power splitter can be used if a coupler is not available, but sufficient power might not reach the

assembly input. Connect the input of the device to the end of cable W20 (EP1)/W83 (EP0) that was disconnected from A13A1J4/A14J2, using a 90° (elbow) SMA adapter. Connect the main output or one arm of the device to A13A1J4/A14J2 using an appropriate SMA adapter. Connect the external spectrum analyzer to the coupled output or other arm of the device. Set the measuring spectrum analyzer reference level offset to the coupling factor of the device, typically -10 dB and -6 dB for Keysight couplers and splitters, respectively.

The signal should be 5172.5 MHz at +10 dBm ± 3 dB.

If the signal level is incorrect, suspect the A20 YTO, A16 Reference, or the interconnect cables. Refer to the chapters on these assemblies for troubleshooting steps.

With Option EP1 installed, part of the first LO phase lock loop is from A13A1J5, Synth Out, back to the A14 LO Synthesizer. This too can be measured to verify the first LO from A13 Front End Assembly. When measuring A13A1J5, the coupler or splitter must also be used. The expected signal level is 5172.5 MHz at +10 dBm ± 3 dB.

A13 Front End Assembly Verification

NOTE

The A13 Front End assembly is shown as A13A1 and A13A2 for troubleshooting clarification. However, A13A1 and A13A2 are not separately replaceable. The entire A13 assembly must be replaced.

Many portions of the Front End Assembly have been verified earlier in the Low Band troubleshooting process outlined above.

The input signal level was measured on W8 as part of the A11 Low Band Switch verification.

The output signal level was measured at A13A1J7 during the quick check to verify the Low Band Signal Path.

The Second LO input was tested during the Second LO Verification.

The LO input at A13A1J4 and the LO outputs were tested when performing the First LO Verification.

It is possible to measure the W48 input cable to the Switched Filter where it connects to A13A2J2, and the output of the Switched Filter at W49 where it connects to A13A1J11. The A13A2 Switched Filter is not separately replaceable, but being able to determine where the signal level is faulty, can aid in verifying the faulty assembly. See the block diagram for signal levels

CAUTION

When measuring W48, the analyzer must be powered down and ribbon cable W28 on the Switched Filter removed to gain access to W48. Once the measuring spectrum analyzer is connected to W48, the W28 ribbon cable must be reinstalled, and only then can the analyzer be powered back up. The ribbon cable is fragile so it cannot be bent out of the way to access the cable, and should not be removed and installed with power applied.

Electronic Attenuator Verification (Option EA3)

The electronic attenuator is aligned as part of the System Gain internal alignment process. See the description of the initial alignments and the location of the alignment history file in the Boot Up and Initialization Troubleshooting chapter. Viewing the Alignment History file will tell you if other alignment tests failed, and reveal which electronic attenuator steps failed.

To verify the electronic attenuator operation on instruments with Option EA3, set up the analyzer to view the 50 MHz calibrator signal on screen. Enable the calibrator signal and press **FREQ**, **Center Frequency**, **50 MHz**, **Span**, **500 kHz**

Press **Peak Search** to place a marker on the calibrator signal, then press **Marker Delta**

Activate the electronic attenuator. Press **AMPTD**, **Attenuation**, **Enable Elec Atten**. Then press **Elec Atten**.

Press the up arrow key to step through all attenuator steps while monitoring the marker delta readout. The signal level should not change more than 0.4 dB as indicated by the marker delta readout.

If the attenuator switches slowly, or the signal is not present when the electronic attenuator is switched into the signal path or the signal appears only when the attenuator is switched on, suspect the control signals from the A15 Front End Controller are faulty or the A13 Front End assembly is faulty. If the attenuator switches, but the switching error between attenuator settings is greater than ± 0.4 dB, assure that any other internal alignment failures are resolved since the System Gain alignment must run before optimum performance is possible. Assure you have evaluated all causes before you replace the Front End assembly.

If you determine the problem is at a frequency other than 50 MHz, perform the low band flatness adjustment before replacing the Front End assembly.

Low Band Preamp Verification (Option P03, P08, P13, P26, P44, P50)

The Preamp is aligned as part of the System Gain internal alignment process. See the description of the initial alignments and the location of the alignment history file in Chapter 2, “Boot Up and Initialization”, on page 33. Viewing the Alignment History file will tell you if other alignment tests failed, and reveal pass or fail information for the preamp.

If any of the preamp options are installed, the Low Band preamp can be verified as follows:

Set up the analyzer to view the 50 MHz calibrator signal on screen

Press **AMPTD**, **Attenuation**, and verify that the Enable Elec Atten key is set to Off. It is not possible to turn on both the electronic attenuator and preamp at the same time.

Press **AMPTD**, **More**, **Internal Preamp**, **Low Band** to activate the preamp.

The expected operation is the signal level will not change more than ± 0.5 dB and the noise floor will increase due to the fact the input attenuator is automatically increased. If the amplitude error when switching the preamp on and off is greater than 0.5 dB, assure that any other internal alignment failures are resolved since the System Gain alignment must run before optimum performance is possible. Assure you have evaluated all causes including A15 Front End Controller switching problems, before you replace the Front End assembly.

If you determine the problem is at a frequency other than 50 MHz, perform the low band flatness adjustment before replacing the Front End assembly.

Quick Check to Verify High Band RF Path

Refer to the mmW High Band Path #1 Block Diagram in Chapter 15.

The High Band signal path (sometimes referred to as Band 1-Band 6) is used for all signals 3.6 GHz and above. If the start frequency is set to 3.6 GHz and above, the analyzer displays only the High Band signal path. If the analyzer start frequency is below 3.6 GHz and the Stop frequency is set above 3.6 GHz, the analyzer will start sweeping in Low Band up to 3.6 GHz, and then automatically switch to the high band path above 3.6 GHz.

The analyzer has an internal 4.8 GHz amplitude reference signal that is used to verify the high band path. This 4.8 GHz calibrator is used when the analyzer performs many of the internal alignment routines. Therefore, the functionality of the 4.8 GHz calibrator and high band path are critical to passing alignments.

Equipment needed:

Spectrum Analyzer with frequency range to at least 14 GHz

Signal source with a frequency range to at least the maximum frequency of the analyzer under test

Directional coupler or power splitter with frequency range at least to 9 GHz

2 each, quality 2.4 mm cables

90° SMA (m) to SMA (f) adapter

MMCX (f) to SMA (f) cable

SMA (f) to SMA (f) adapter

SMA (m) to SMA (m) adapter

3.5mm (f) to 2.4 mm (m) adapters (2 required)

3.5 mm (m) to 2.4 mm (f) adapter

NOTE The expected signal power levels in the following procedures do not account for the loss from cables and adapters used with the external equipment. It is recommended that a power meter be used to verify the additional loss.

1. With the instrument off, remove the outer cover and the top brace. See Chapter 18, “Assembly Replacement Procedures,” in this manual. Then turn the instrument on and allow it to complete its full boot up process to Signal Analyzer mode.

IMPORTANT Turn off auto align by pressing **System**, **Alignments**, **Auto Align**, **Off**.

2. Enable and use the internal 4.8 GHz, –28 dBm calibrator signal as a reference for troubleshooting by pressing **Mode Preset**, **Input/Output**, **Input**, **RF Calibrator**, **4.8 GHz** on the analyzer.
3. Now press **FREQ**, **4.8 GHz**, **Span**, **1 MHz**, **Peak Search**. The 4.8 GHz reference signal should measure –28 dBm ± 2 dB on the analyzer display. If the power level is within tolerance, the 3.6 GHz to 17.1 Ghz path is functioning correctly at 4.8 Ghz.
4. If the power level is incorrect, change the 4.8 GHz RF Calibrator to the 50 MHz RF calibrator and set the analyzer center frequency to 50 MHz so it is analyzing in low band. Since several of the same signal path components are shared between high band and low band, determining if the problem appears in both paths is helpful. The 50 MHz reference signal should measure –25 dBm ± 2 dB. If this power level is also incorrect, skip to step 8.
5. If the power level at 50 MHz is within tolerance, continue the high band check. Select the 4.8 GHz RF calibrator and set the analyzer center frequency to 4.8 GHz again, then press **Span**, **Zero Span**. Disconnect cable W16 at A13A1J7, 322.5 MHz output on the Front End Assembly. See Figure 7-1 for connector location.

   Connect A13A1J7 output to a functioning spectrum analyzer and verify the 322.5 MHz intermediate frequency is measuring –31 ± 4 dB as shown in Figure 7-5.

Figure 7-5 322.5 MHz Intermediate Frequency

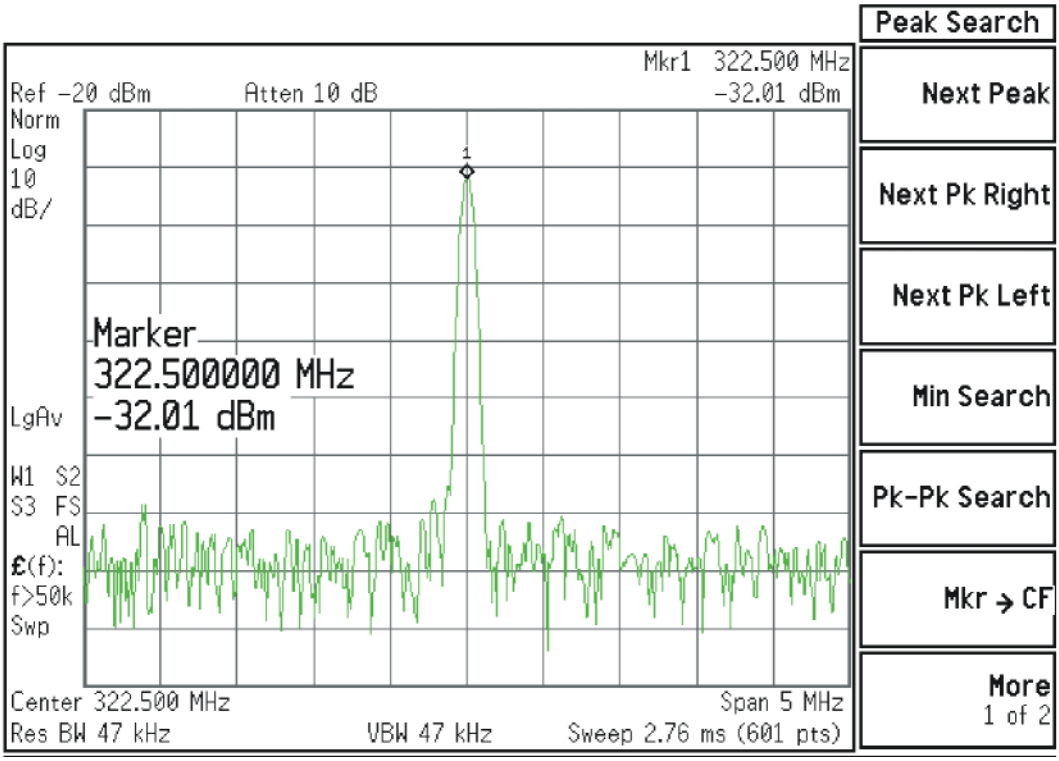

6. The 4.8 GHz reference signal verifies High Band #1 signal path (3.6 GHz to 17.1 GHz), which utilizes a different mixer than the signal paths of High Band #2 (17 GHz to 34.5 GHz) and of High Band #3 (34.4 GHz to 50 GHz) in the A13 Front End assembly. Disable the 4.8 GHz RF calibrator signal by pressing **Input/Output**, **Input**, **RF Calibrator**, **None** and connect an external signal source to the input of the analyzer under test. Set the frequency of the signal source and analyzer under test to a frequency within the High Band #2 range, and the power level of the source to -28 dBm. Verify the 322.5 MHz intermediate frequency is still measuring within tolerance on the external spectrum analyzer. Then repeat with a frequency within the High Band #3 range. If the power level is correct in one High Band path but not others, suspect the A13 Front End Assembly.
7. If this power level is correct the signal path from the A9 Input Attenuator A to the A13 Front End assembly is operating correctly in high band. Reconnect the W16 cable to A13A1J7 and troubleshoot the IF path assemblies.
8. If this power level is incorrect verify the following assemblies using the 4.8 GHz internal calibrator signal.
   - A9 Input Attenuator A and A10 Input Attenuator B
   - A11 Low Band Switch
   - A16 Reference Assembly (50 MHz calibrator, 2nd LO)
   - A20 YTO and A14 Synthesizer (1st LO)
   - A13 RF Front End Assembly
   - SW3 Low Noise Path Switch (Option LNP)
   - SW4 Microwave Preselector Bypass Switch (Option MPB)

   Proceed to "Troubleshooting a High Band Problem" on page 175.

NOTE

If the power level was also incorrect when switching the calibrator signal to 50 MHz, start from the beginning with the RF Calibrator Verification. If it was incorrect only with the 4.8 GHz calibrator signal, start with the A11 Low Band Switch Verification.

Troubleshooting a High Band Problem

In order to gain access to the front end components, remove the front frame assembly, but leave the ribbon cable connected so you can still control the instrument. Then remove the RF Bracket on the right side of the chassis. Refer to the removal procedures in Chapter 18, “Assembly Replacement Procedures.”

Refer to the mmW High Band Path #1 Block Diagram in Chapter 15, “Block Diagrams,” and follow the instructions in the settings box. If the instrument has Option EP0 installed, refer to the "mmW High Band Path #1 Opt EP0 and B5X Block Diagram" instead.

The internal RF calibrator is used for several verification procedures, 50 MHz for low band path and 4.8 GHz for high band path. To enable the internal 4.8 GHz, –28 dBm calibrator signal press **Input/Output**, **Input**, **RF Calibrator**, **4.8 GHz**.

4.8 GHz RF Calibrator Signal Verification

First verify the RF Calibrator signal is correct. On the A16 Reference assembly, disconnect semi rigid cable W3 from A16J701 and measure A16J701 with an external spectrum analyzer. See Figure 7-3 for location of connector. With the internal calibrator enabled, expected signal is 4.8 GHz at –28 dBm ± 0.5 dB. If signal level is incorrect, suspect A16 Reference assembly is faulty, or the 4.8 GHz calibrator amplitude requires adjustment using the field calibration software.

Figure 7-6 A16 Reference Assembly

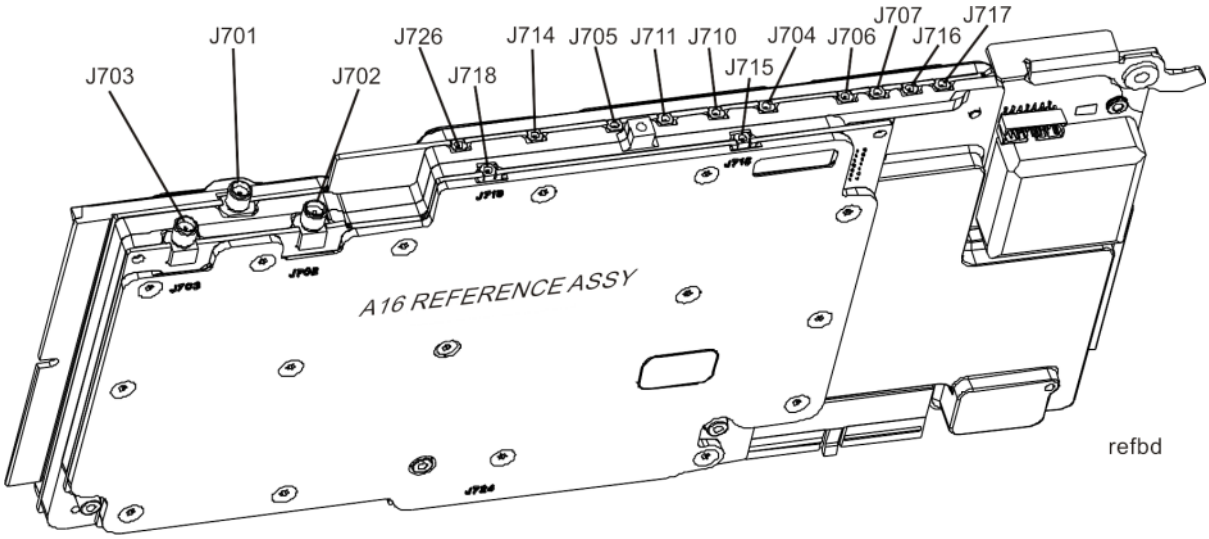

NOTE Before proceeding with the next verification procedure, be sure to reconnect any disconnected cables and restore the prescribed settings from the block diagram, if changed.

A9 Input Attenuator A and A10 Input Attenuator B Verification

To perform input attenuator tests, connect an external signal source set to 4.8 GHz and –25 dBm (with output initially **Off**) to the RF input connector of the analyzer under test. Then disconnect the semi-rigid cable W6 (W52 for instruments with Option LNP) from the A10 Input Attenuator B output port and connect an external spectrum analyzer to the attenuator output. See Figure 7-7 for location of connector. This setup will be used to verify that the calibrator switch and attenuator steps are operating properly.

Figure 7-7 RF Section

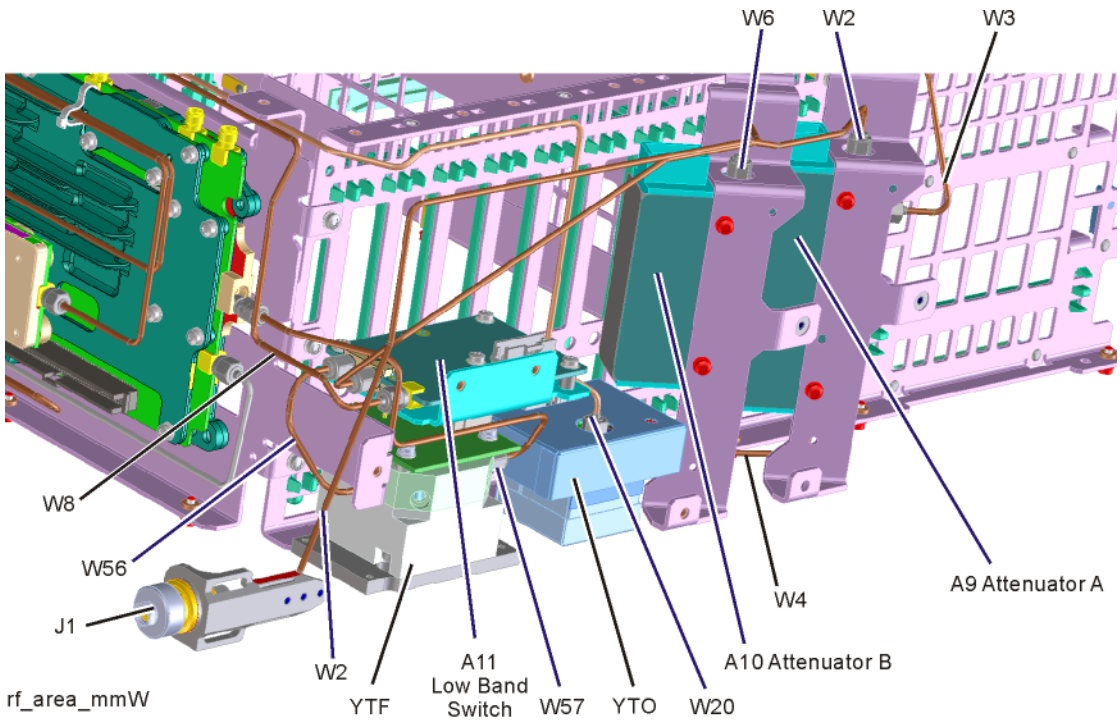

Calibrator Switch Test

To verify calibrator switch operation, measure the calibrator signal with the external spectrum analyzer connected to the A10 Attenuator output. Default attenuation at boot up is 10 dB, so the expected signal is 4.8 GHz at –35 dBm ± 0.5 dB.

If the signal is incorrect, press **Input/Output**, **Input**, **RF Calibrator**, **Off** to disable the internal calibrator and then turn the external signal source RF output **On**. If the signal level is still incorrect, proceed with the Attenuator Step Test. However, if the signal level at the attenuator output is now correct, suspect the A9 Attenuator cal switch or a faulty control signal from the A15 Front End Controller assembly. Inspect the ribbon cable W5 controlling the attenuators for damage, then refer to Chapter 8, “Front End Controller,” to verify that the A9 attenuator is being controlled properly before replacing it.

Attenuation Step Test

Set the signal source connected to the analyzer input port to 0 dBm. On the analyzer under test, press **Amplitude**, **Attenuation**, **Mech Atten 0 dB** to change input attenuation to 0 dB. The external spectrum analyzer connected to A10 Attenuator output port should indicate a 0 dBm level. Change the input attenuation on the analyzer under test to 2 dB.

See the chart below for expected measurement values at the A10 Attenuator output port.

Table 7-3

Analyzer Under Test Attenuator Setting (dB)	Power at A10 Output Port (dBm)	Input Attenuator Being Tested
0	0 dBm (reference)	Both set to through path
2	–2	A9
4	–4	A9
6	–6	A9
8	–8	A9
10	–10	A10
20	–20	A10
30	–30	A10
40	–40	A10
50	–50	A10
60	–60	A10
70	–70	A9 set to 10 dB, A10 set to 60 dB

A12 YTF Preselector and A13 Front End Input Verification

Turn on the 4.8 GHz calibrator signal and disconnect the cable W62 (if Option LNP and/or MPB is installed) or W57 (if neither Opt LNP nor MPB are installed) from A13A1J9. See Figure 7-8 for location of connector. Loosen the other end of W62/W57 if possible to avoid damaging the cable. Attach a right angle sma adapter to W62/W57 and measure the input to the A13 Front End with an external spectrum analyzer.

Figure 7-8 A13A1J9 Location

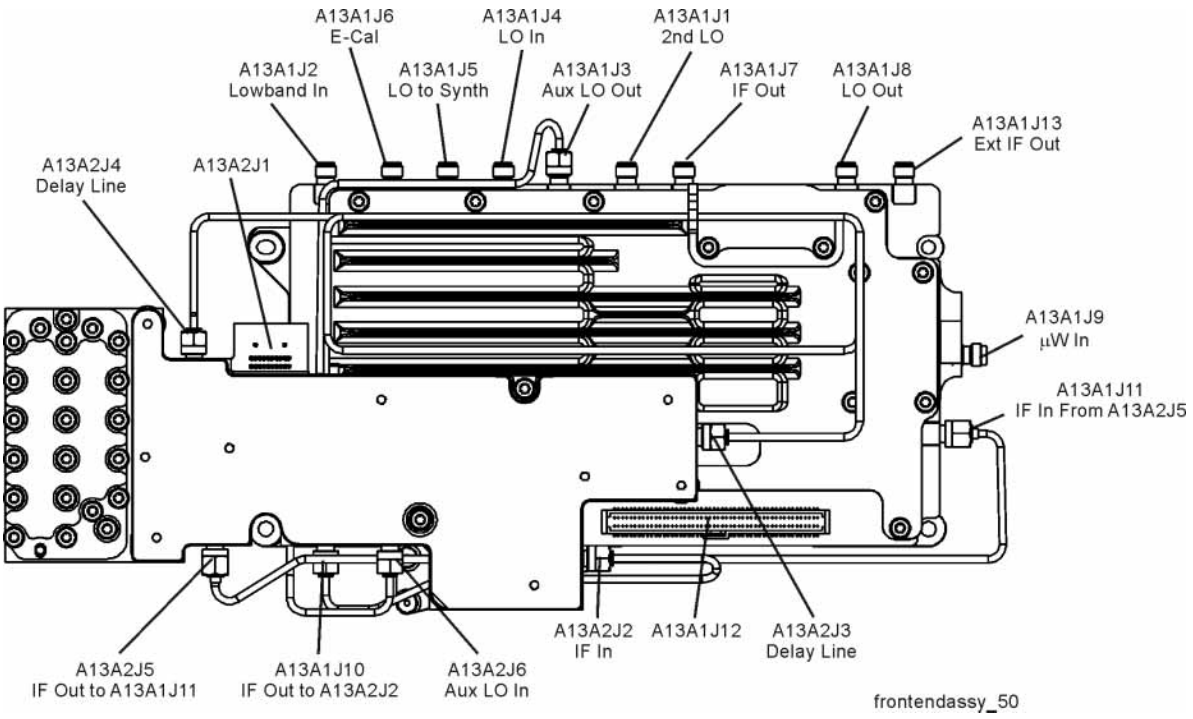

Expected signal is 4.8 GHz at –51 dBm ± 4 dB. The tolerance is large because the A12 YTF (microwave preselector) loss varies between devices, and the YTF may not be perfectly aligned, or the frequency response adjustment may be required.

If the signal level is incorrect, and Option MPB (Microwave Preselector Bypass) is installed, press **Amplitude**, **Signal Path**, **uW Path Control**, **uW Preselector Bypass**. If the signal level is now –52 dBm, suspect the A12 YTF is out of adjustment or faulty.

To perform the YTF alignment, reconnect W62/W57 cable, and press **System**, **Alignments**, **More**, **Advanced**, **Characterize Preselector**. The routine may take several minutes to align the YTF. Display the 4.8 GHz calibrator signal on screen as explained in the quick check section. If the signal level is still incorrect, suspect all assemblies, cables, switches and the A16 Reference calibrator signal between the W62/W57 cable and the input to the A9 Attenuator.

NOTE For additional methods on troubleshooting the YTF, refer to the "Verifying A12 YTF Preselector Tune Output" section in Chapter 8, "Front End Controller."

If Option MPB is not present, remove A10 Input Attenuator B output cable and measure the output power. Expected signal is 4.8 GHz –38 dBm. See Figure 7-7 for location of attenuator. If the attenuator output signal is correct suspect the A11 Low Band Switch, and if Option MPB or LNP is installed, suspect switches SW3 and SW4.

Also, suspect the switching signals from the A15 Front End Controller. The control signals for the switches, as well as for the YTF Preselector tuning, are explained in Chapter 8, "Front End Controller."

First LO Level Verification

The first LO is the A20 YTO assembly. The first LO is phased locked by the by the A14 Synthesizer assembly, which also controls the YTO with tuning signals via ribbon cable W23. If Option EP0 is installed, the LO signal will be alternatively supplied by the A14 DDS Synthesizer depending on analyzer settings and modes, but not in Swept SA mode.

To assure the first LO is tuned to the correct frequency and power, measure the A13 Front End assembly at A13A1J3 when the analyzer center frequency is 4.8 GHz. See Figure 7-8 for location of connector. This test port is chosen because removing cable W19 will not cause the analyzer LO phase lock loop to unlock for instruments with Option EP1 installed, which would affect the LO frequency measurement.

The LO signal should measure 5122.5 MHz at +10 dBm ± 3 dB +9 dBm ± 3 dB if Option EP1 is installed, or 0 dBm ± 3 dB with Option EP0.

If the signal level is incorrect, measure the signal coming from the A20 YTO at A13A1J4 (EP1) or at A14J2 (EP0). In order to measure this signal and avoid an LO Unlock, you will need to install a directional coupler. A power splitter can be used if a coupler is not available, but sufficient power might not reach the assembly input. Connect the input of the device to the end of cable W20 (EP1)/W83 (EP0) that was disconnected from A13A1J4/A14J2, using a 90° (elbow) SMA adapter. Connect the main output or one arm of the device to A13A1J4/A14J2 using an appropriate SMA adapter. Connect the external spectrum analyzer to the coupled output or other arm of the device. Set the measuring spectrum analyzer reference level offset to the coupling factor of the device, typically -10 dB and -6 dB for Keysight couplers and splitters, respectively.

The signal should be 5122.5 MHz at +10 dBm ± 3 dB.

If the signal level is incorrect, suspect the A20 YTO, A16 Reference, or the interconnect cables. Refer to the chapters on these assemblies for troubleshooting steps.

With Option EP1 installed, part of the first LO phase lock loop is from A13A1J5, Synth Out, back to the A14 LO Synthesizer. This too can be measured to verify the first LO from A13 Front End Assembly. When measuring A13A1J5, the coupler or splitter must also be used. The expected signal level is 5122.5 MHz at +10 dBm ± 3 dB.

A13 Front End Assembly Verification

NOTE

The A13 Front End assembly is shown as A13A1 and A13A2 for troubleshooting clarification. However, A13A1 and A13A2 are not separately replaceable. The entire A13 assembly must be replaced.

Many portions of the Front End Assembly have been verified earlier in the High Band troubleshooting process outlined above.

The input signal level was measured on W62/W57 as part of the A13 Front End Input Verification.

The output signal level was measured at A13A1J7 during the quick check to verify the High Band signal path.

The LO input at W20, and the LO outputs were tested when performing the First LO Verification.

High Band Preamp Verification (Option P08, P13, P26, P44, P50)

If a preamp option listed above is installed, the High Band preamp can be verified as follows:

View the 4.8 GHz calibrator signal on screen. Press **AMPTD**, **More**, **Internal Preamp**, **Full Range** to activate the preamp.The expected operation is the signal level will not change more than +/- 0.5 dB and the noise floor will increase due to the fact the input attenuation was automatically increased.

If the amplitude error when switching the preamp on and off is greater than 0.5 dB, assure that any other internal alignment failures are resolved since the System Gain alignment must run before optimum performance is possible. The amplitude error could be caused by poor frequency response, and performing the high band frequency response adjustment (using the calibration software) will adjust the preamp on, high band path. Assure you have evaluated all causes including A15 Front End Controller switching problems, before you replace the Front End assembly.

SW3 Low Noise Path Switch Verification (Option LNP)

If Option LNP is installed, the Low Noise Path Switch 3 can be verified as follows:

Turn on the 4.8 GHz calibrator signal and press **Amplitude**, **Signal Path**, **uW Path Control**, **Low Noise Path Enable** key. The Low Noise Path will be enabled only after the following conditions are met:

1. **The start frequency must be 3.6 GHz or greater.**
2. **The high band preamp (option P08, P18, P26, P44, P50) must be Off.**

When Switch 3 changes state, you will hear a click. The amplitude of the displayed signal should not change.

SW4 Microwave Preselector Bypass Switch Verification (Option MPB)

If Option MPB is installed, the Microwave Preselector Bypass Switch 4 can be verified as follows:

Assure start frequency is 3.6 GHz or greater. Press **Amplitude**, **Signal Path**, **uW Path Control**, **uW Preselector Bypass**.

When the bypass switch, SW4, changes state, you will hear a click. Depending on the signal source connected, you may see many “signals” appear on screen because without preselection, the analyzer will display images and multiples. The real input signal should not change amplitude when you switch the uW Preselector Bypass on and off.

NOTE

For additional methods on troubleshooting the LNP and MPB switches, refer to Chapter 8, “Front End Controller.”

8 Front End Controller

What You Will Find in This Chapter

The following information is presented in this chapter:

1. Theory of operation of the Front End Controller section.
2. Isolating the cause of a hardware problem by verifying the functionality of assemblies of the Front End Controller.

NOTE Each of the following sections first describes how the assembly works, then gives information to help you troubleshoot the assembly. Each description explains the purpose of the assembly, describes the main components, and lists external connections to the assembly.

The following information is found in this chapter:

A15 Front End Controller Description on page 184

A15 Front End Controller Troubleshooting on page 188

Verifying Input Attenuator A, Input Attenuator B, Low Band Switch Logic and Power Supplies on page 189

Verifying A12 YTF Preselector Tune Output on page 198

Verifying SW3 Low Noise Path Switch (Option LNP) on page 200

Verifying SW1, SW2, or SW4 Microwave Preselector Bypass Switch (Option MPB) on page 201

Verifying Narrowband IF Out (A15J900) on page 205

Verifying Wideband IF Out (A15J901, Option B40, B85, B1X, B2X, B5X only) on page 205

Verifying Aux IF Out, Rear Panel (Option CR3, CRP, ALV only) on page 206

Standard PXA on page 206

Verifying 2nd IF Output (Option CR3) on page 206

Verifying Arbitrary IF Output (Option CRP) on page 208

Verifying Auxiliary Log Video Output (Option ALV) on page 209

Oscilloscope Test on page 201

A15 Front End Controller Description

Purpose

The A15 Front End Controller board functionality can be broken down into (3) main categories

1. **Provides switch control logic and bias voltages to the major RF front end assemblies in the N9030B Signal Analyzer.**
2. **Contains on board circuitry providing various signal outputs to other locations within the analyzer.**
3. **Provides control logic for various instrument options within the analyzer.**

These signals are routed to and from the A15 via ribbon cables, wiring harnesses and coaxial cables. The RF front end assemblies require the correct control logic and bias in order to function properly. If the voltages from the A15 are not correct, the RF input signals will most likely be displayed at an incorrect power level if they even get displayed at all.

Standard RF Assemblies Controlled by the A15:

- A9 Input Attenuator A (4 dB total for Opt 503, 508, 513, 526; 10 dB total for Opt 544, 550)
- A10 Input Attenuator B (66 dB total for Opt 503, 508, 513, 526; 60 dB total for Opt 544, 550)
- A11 Low Band Switch
- A12 YIG Tuned Filter
- A13 RF Front End Assembly

A15 On Board Circuits:

- RF Burst Trigger (When set to Relative Trigger or when start frequency is > 300 MHz.)
- Switched IF Filter Control
- 1st LO Optimization
- YTF Tune Ramp
- Preselector Tune Out (Provides output voltage, not specified, reserved for future use)
- Mixer Bias
- Amplifier Bias
- Switch Control
- Sweep Ramp (reserved for future use)

Table 8-1 A15 Option Related Control

Option	Description	Physical Location in the Analyzer
P03	100 kHz to 3.6 GHz Internal Preamplifier	A15 to A13
P08	100 kHz to 8.4 GHz Internal Preamplifier	A15 to A11 and A13
P13	100 kHz to 13.6 GHz Internal Preamplifier	A15 to A11 and A13
P26	100 kHz to 26.5 GHz Internal Preamplifier	A15 to A11 and A13
P43	100 kHz to 43 GHz Internal Preamplifier	A15 to A11 and A13
P44	100 kHz to 44 GHz Internal Preamplifier	A15 to A11 and A13
P50	100 kHz to 50 GHz Internal Preamplifier	A15 to A11 and A13
ALV	Log Video Out	A15 to Aux IF Output (rear panel)
CRP	Arbitrary IF Out	A15 to Aux IF Output (rear panel)
CR3	2nd IF Out	A15 to Aux IF Output (rear panel)
LNP	Low Noise Path	A15 to SW3
MPB	Microwave Preselector Bypass	A15 to SW1 and SW2 (Opt 508, 513, or 526) A15 to SW4 (Opt 544, or 550)
EA3	Electronic Attenuator	A15 to A13

Figure 8-1 A15 Front View, Physical Connectors

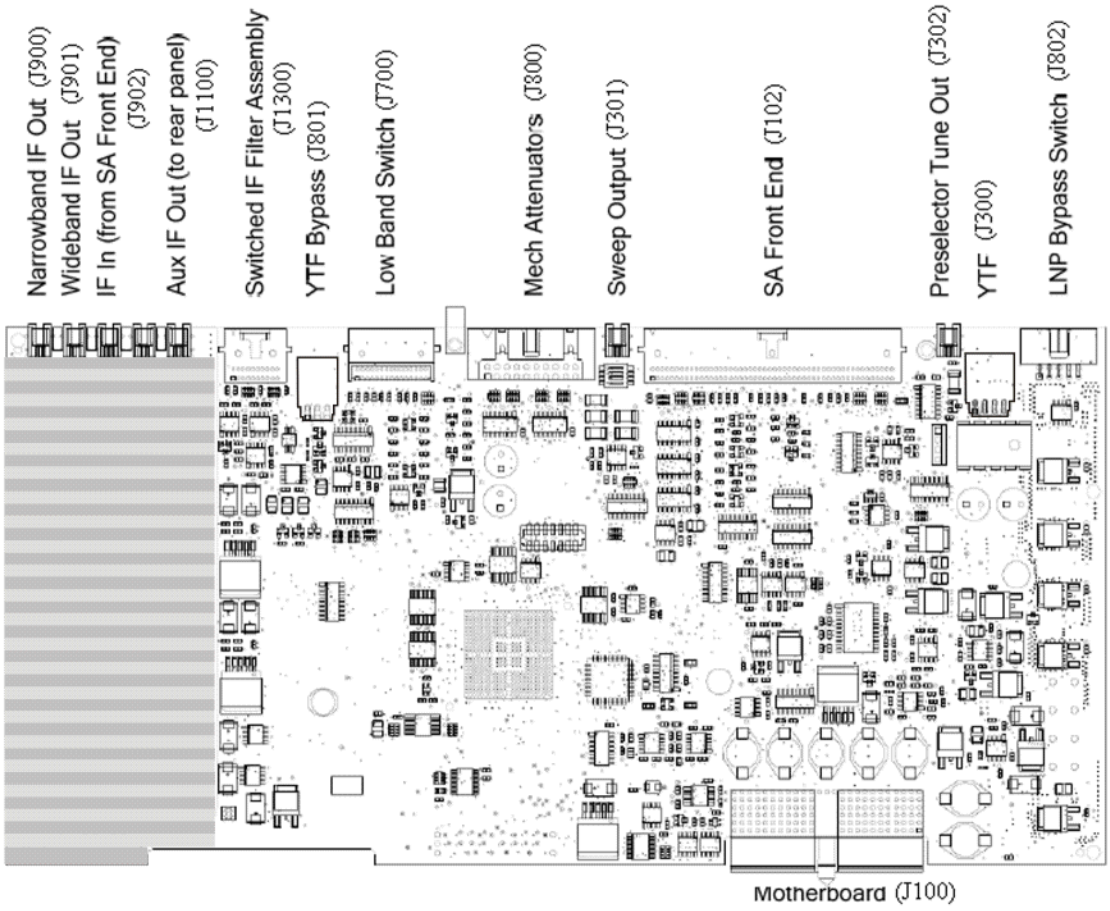

pxafec2

The table below describes the connector location and the final destinations of the RF signal, switch control logic or bias voltage.

Table 8-2 A15 Connectors and Destinations

A15 Connector Designation	Description	Destination
J900	Narrowband IF Out	To A2
J901	Wideband IF Out	To A2 or A3 (Wide bandwidths)
J902	IF In	From A13 to A15
J903	Ext IF In	From A13 to A15 (Option EXM)
J1100	Aux IF Out	To Rear Panel
J1300	Switched IF Filter Out	To A13A2

Table 8-2 A15 Connectors and Destinations

A15 Connector Designation	Description	Destination
J801	YTF Bypass Out	To SW1 & SW2 (Option MPB with Option 508, 513, or 526) To SW4 (Option MPB with Option 544, or 550)
J700	Low Band Switch Logic Out	To A11
J800	Mechanical Attenuator Logic Out	To A9 & A10
J301	Sweep Out	Reserved for future use
J102	RF Front End Logic Out	To A13
J302	Preselector Tune Out	N/A (test point only)
J300	YTF Bias Control Out	To A12
J802	Low Noise Bypass Switch Logic Out	To SW3 (Option LNP)
J100	Motherboard Connector	From A8

A15 Front End Controller Troubleshooting

The N9020A, MXA Signal Analyzer utilizes an RF front end troubleshooting board that can be used to verify some, but not all of the control circuitry on the N9030B, PXA Signal Analyzer due to the additions of front end assemblies. The troubleshooting board kit part number is N9020-60005 and includes the troubleshooting board and required interconnect cables. If you have the interconnect cables, you can order the board by itself using part number E4410-60115. When using the troubleshooting board and cables on a PXA the control logic for Input Attenuator A, Input Attenuator B, Low Band Switch and some of the power supplies can be verified. The remaining control voltages and RF signals can be measured directly with a voltmeter, oscilloscope or functioning spectrum analyzer.

In order to verify the wide bandwidth IF's and Aux IF output frequencies and power levels the following specialty cables and connector will be needed:

MMCX (m) to SMB (f) cable, p/n 8121-0655

MMCX (f) to MMCX (f) barrel. Huber & Suhner 31_mmcx-50-0-1/111_0E

Visit: https://www.hubersuhner.com/en

Other standard cables and connectors need to be used to adapt to the voltmeter or the RF input of the functioning spectrum analyzer.

Verifying Input Attenuator A, Input Attenuator B, Low Band Switch Logic and Power Supplies

1. Turn off the instrument.
2. Disconnect ribbon cables from A15J700 and A15J800 as shown Figure 8-2.

Figure 8-2 Ribbon Cables at A15J700 and A15J800

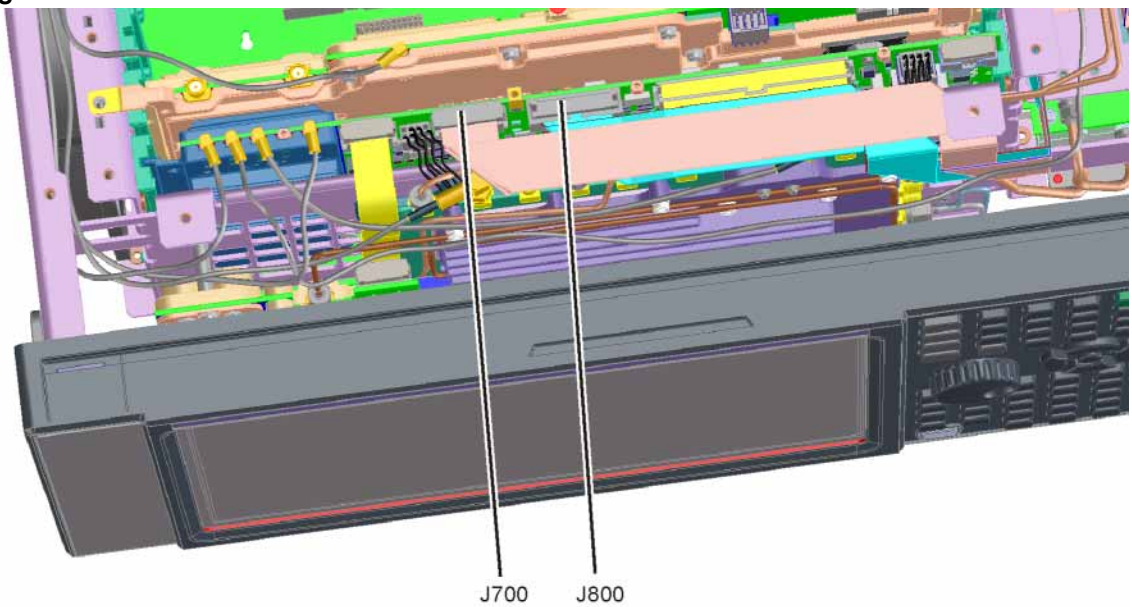

pxafeccables

3. Connect the E4410-60115 RF Front End Troubleshooting board to the A15 Front End Controller board using the E4410-60157 attenuator control cable. When connecting the attenuator control cable, E4410-60157, note that one end has two 10-pin connectors with one connector extending beyond the other. The shorter connector is marked with a red stripe. Connect the end with the 20-pin connector to A15J800. Connect the two 10-pin connectors to either J3 or J4 of the RF Front End Troubleshooting board based upon the PXA's frequency range as described below:

Table 8-3 PXA Frequency Range

Frequency Range Option	Shorter 10-pin connector (marked with red stripe)	Longer 10-pin connector
503, 508, 513, or 526	J3	J4
544, 550	J4	J3

4. If the PXA has frequency range option 503, 508, 513, or 526, also connect the Low Band Switch Control Cable, E4410-60160 between A15J700 and J2 of the RF Front End Troubleshooting board. Do not connect this cable if the frequency range option is 544 or 550.

Figure 8-3 RF Front End Troubleshooting Board

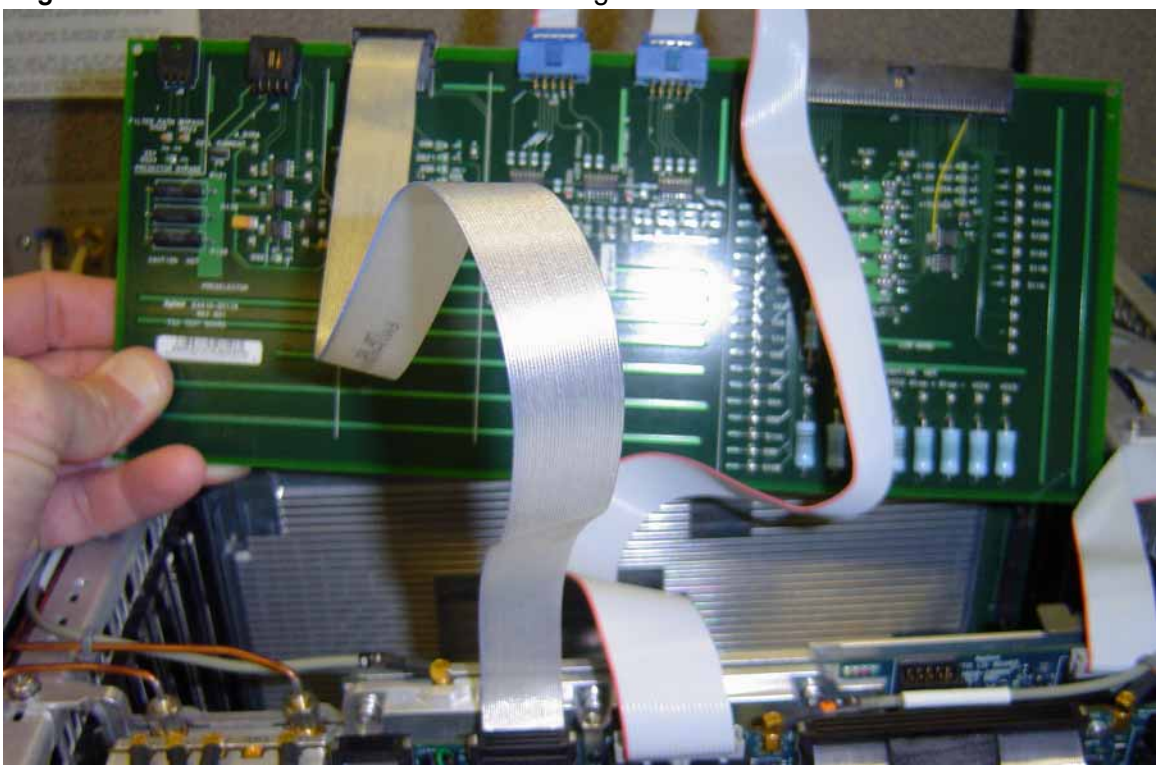

5. Place the RF front end troubleshooting board on an ESD safe bag or foam to ensure nothing shorts out. See Figure 8-4.

Figure 8-4 RF Front End Troubleshooting Board Placement

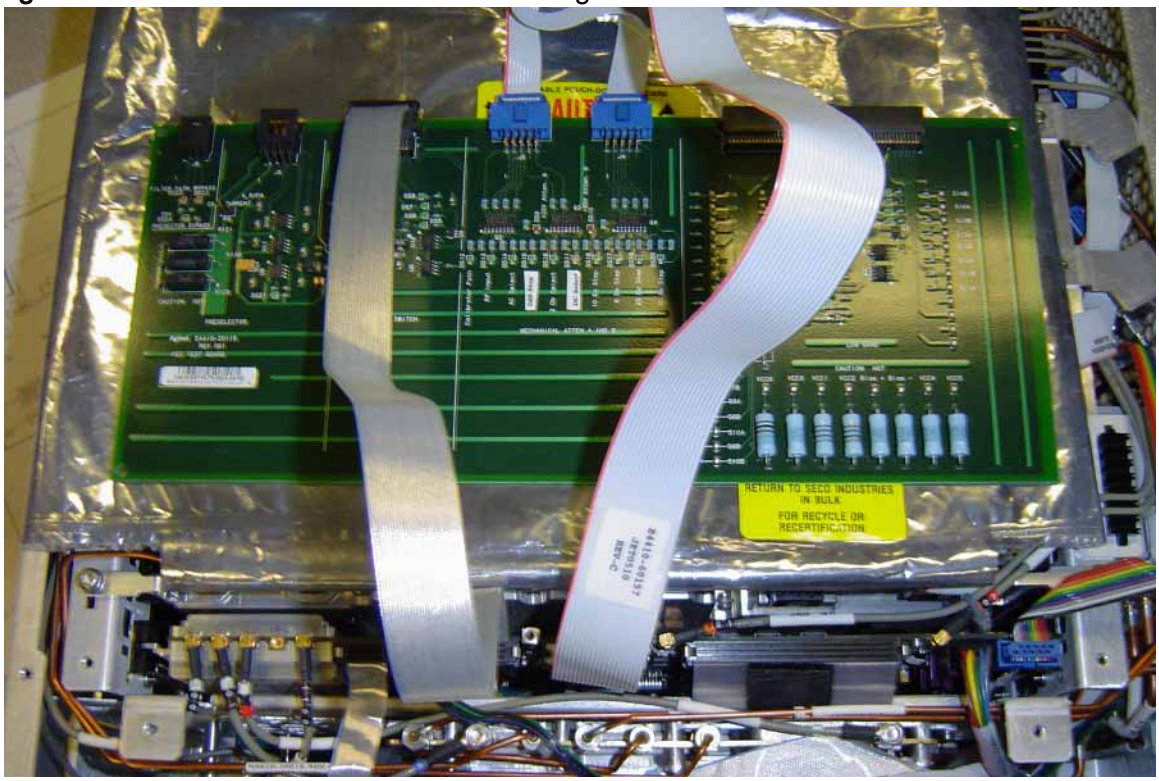

6. Turn the instrument on and allow it to complete its full boot up process to the Spectrum Analyzer application.

NOTE

You may notice an Align Now, All required message on the analyzer display. This can occur when the test board is connected.

7. Turn Auto Align off by pressing **System**, **Alignments**, **Auto Align**, **Off** on the analyzer.

CAUTION

Resistors on the test board can get very hot. Handle with care.

Power Supply Verification

Looking at the test board, verify power supply green LED's DS5, DS6, DS7 and DS8 located under the J2 connector are turned on. Additionally red LED's DS9 and DS10 should also be on. The power supply voltages are listed in the table below.

Table 8-4 Power Supply Voltages

LED	Power Supply
DS5	+15 VDC
DS6	+9.0 VDC
DS7	+5.2 VDC
DS8	-15 VDC
DS9	+25 VDC
DS10	+25 VDC

If any of the power supply LED's are not turned on, see Chapter 2, “Boot Up and Initialization”.

Input Attenuator A Control Logic Verification (Option 503, 508, 513, 526)

Press **AMPTD**, **Attenuation 0 dB** on the analyzer.

Attenuation LED's DS15-20 on the test board should be off.

When the input attenuation is changed from 0 dB to 2 dB, the 2 dB Step LED DS15 should illuminate. When the input attenuation is changed from 2 dB to 4 dB, DS15 and DS16 should be illuminated as per Table 8-5.

Table 8-5 Input Attenuator A LED’s

Attenuator Setting (dB)	DS15	DS16
0	OFF	OFF
2	ON	OFF
4	ON	ON

If this is incorrect, the most probable cause is the A15, Front End Controller.

The analyzer default setting for RF Coupling is AC mode. Verify the AC Select LED DS14 is illuminated at this time. Press **Input/Output**, **RF Input**, **RF Coupling**, **AC/DC** to DC on the analyzer. DS14 should turn off and DS11, DC Select LED should illuminate. Switch the RF Coupling back to AC. If the LED's do not illuminate correctly, the most probable cause is the A15 Front End Controller.

Input Attenuator A Control Logic Verification (Option 544, 550)

NOTE Ignore DS11 in this procedure.

Press **System, Show, Hardware**. Look for an entry for the Low Band Switch and verify that the HW ID is 45. If the HW ID is something other than 45 (for example, 10) or there is no entry for the Low Band Switch, the analyzer will control the attenuators as if they are 26.5 GHz attenuators, not the 50 GHz attenuators that are actually installed. If this occurs, skip this procedure and troubleshoot the Low Band Switch.

Press **AMPTD, Attenuation** 0 dB on the analyzer.

Attenuation LEDs DS14 through DS20 should be off.

When the input attenuation is changed from 0 to 8 dB in 2 dB steps, LEDs DS14 through DS16 should be illuminated as per Table 8-6. When the input attenuation is set to 70 dB, LEDs DS14 through DS16 should all be illuminated.

Table 8-6 Input Attenuator A LED's (Opt 544, 550)

Attenuator Setting (dB)	DS14	DS15	DS16
0	OFF	OFF	OFF
2	OFF	ON	OFF
4	ON	ON	OFF
6	OFF	OFF	ON
8	OFF	ON	ON
70	ON	ON	ON

If this is incorrect, the most probable cause is the A15 Front End Controller.

Input Attenuator B Control Logic Verification (Option 503, 508, 513, 526)

Press **AMPTD**, **Attenuation 6 dB** on the analyzer and verify the 6 dB Step LED DS17 is illuminated. Change to the input attenuation settings found in Table 8-7 and verify the proper LED's illuminate on the Front End Troubleshooting board according to Table 8-7.

Table 8-7 Input Attenuator B LED’s

Attenuator Setting (dB)	DS20 30 dB Step LED	DS19 20 dB Step LED	DS18 10 dB Step LED	DS17 6 dB Step LED
10	OFF	OFF	ON	OFF
16	OFF	OFF	ON	ON
20	OFF	ON	OFF	OFF
30	ON	OFF	OFF	OFF
40	ON	OFF	ON	OFF
50	ON	ON	OFF	OFF
60	ON	ON	ON	OFF
66	ON	ON	ON	ON

If the LED's illuminate correctly, the switch control logic for the input attenuators from the A15 Front End Controller is correct. If the LED's are not illuminating as expected, the most probable cause is the A15 Front End Controller.

Set the input attenuator back to 10 dB by pressing **AMPTD**, **Attenuation**, **10 dB** on the analyzer.

Input Attenuator B Control Logic Verification (Option 544, 550)

Press **AMPTD**, **Attenuation 10 dB** on the analyzer and verify that the 10 dB Step LED DS18 is illuminated.

Table 8-8 Input Attenuator B LED's (Opt 544, 550)

Attenuator Setting (dB)	DS17	DS18	DS19
10	OFF	ON	OFF
20	OFF	OFF	ON
30	ON	OFF	OFF
40	ON	ON	OFF
50	ON	OFF	ON
60	ON	ON	ON
70	ON	ON	ON

If the LEDs illuminate correctly, the switch control logic for the input attenuators from the A15 Front End Controller is correct. If the LEDs are not illuminating as expected, the most probable cause is the A15 Front End Controller.

Set the input attenuator back to 10 dB by pressing **AMPTD**, **Attenuation**, **10 dB** on the analyzer.

Low Band Switch Control Logic Verification (Option 503, 508, 513, 526 only)

NOTE If your PXA has option 544 or 550, skip to "Disconnect RF Front End Troubleshooting Board".

Press **Mode Preset** on the analyzer. Press **FREQ**, **50 MHz**, **Span**, **2 MHz** on the analyzer. Make sure the auto alignments are turned off by pressing **System**, **Alignments**, **Auto Align**, **Off**. Connect the voltmeter positive lead to test point listed in the table below and the negative lead to the instrument chassis. These test points are located under the J2 connector. Verify the voltages in Table 8-9.

Table 8-9

Test Board Test Point	Voltage (VDC)
In1A	–9.90
In2A	–9.90
In1B	+10.0
In2B	+10.0

Press **FREQ**, **5 GHz** on the analyzer. Verify the voltages in Table 8-10.

Table 8-10

Test Board Test Point	Voltage (VDC)
In1A	+10.0
In2A	–9.90
In1B	–10.0
In2B	+10.0

If the voltages are not correct, the most probable cause is the A15 Front End Controller.

NOTE The procedure above will not work on analyzers with frequency range options 544, and 550.

Disconnect RF Front End Troubleshooting Board

You do not need the RF front end troubleshooting board to test out the remaining front end hardware components. At this point it is advisable to shutdown the analyzer and disconnect the test board and cables. Be sure to reconnect the PXA Low Band switch ribbon cable and the input attenuator ribbon that were originally plugged into the Front End Controller board before testing the input attenuator and low band switch logic.

Verifying A12 YTF Preselector Tune Output

The A12 YIG Tuned Filter, or Preselector, is used in the high band path (above 3.6 GHz). The J302 connector on the A15 FEC assembly, Presel Tune Out, is a test point for measuring the internal A12 filter drive voltage variations with center frequency. The preselector tune output voltage can be used to verify this portion of the A15, or the A12 itself, is functioning.

Connect A15J302 to a voltmeter. Use an MMCX (m) to SMB (f) adapter to connect to J302 on the A15 FEC board and appropriate adapters to connect to the voltmeter. Refer to Figure 8-1 for J302 location.

Press **System**, **Alignments**, **Auto Align**, **Off** on the analyzer once it has fully booted to the spectrum analyzer application. Press **Span**, **Zero Span** on the analyzer. The preselector tune output voltage in high band should change when the center frequency of the analyzer is changed.

NOTE Preselector tune output measurements are not valid for Option 503, 3 GHz frequency range.

Table 8-11 Preselector Tune Output Voltages (Option 508, 513, 526)

Center Frequency (GHz)	~ Tune Voltage (VDC)	Valid Frequency Range Option
5.0	1.8	508, 513, 526
10.0	3.5	513, 526
15.0	5.2	526
20.0	7.0	526
26.0	9.0	526

Table 8-12 Preselector Tune Output Voltages (Option 544, 550)

Center Frequency (GHz)	~ Tune Voltage (VDC)	Valid Frequency Range Option
5.0	0.9	544, 550
10.0	1.8	544, 550
15.0	2.7	544, 550
20.0	3.6	544, 550
25.0	4.6	544, 550
30.0	5.5	544, 550
40.0	7.3	544, 550
42.5	7.75	544, 550
43.5	8.0	544, 550
45	8.25	550
50	9.2	550

Even if the voltages listed in the table are correct, it does not guarantee the proper control current is getting to the YTF. There is not a convenient way to measure the control current, so if a high band issue is suspect, and other components of the RF Input Section have been verified to not be suspect, it is recommended that the A15 is changed out first before changing the YTF since the A15 board has easy access.

Verifying SW3 Low Noise Path Switch (Option LNP)

Since there is a ribbon cable from the A15J802 to SW3, it is not feasible to use a voltmeter or oscilloscope to measure the control voltages. For testing SW3, the “click” test can be used.

Press **Mode Preset** on the instrument, then press **System**, **Alignments**, **Auto Align**, **Off** to turn of automatic alignments. Press **FREQ**, **5 GHz**, **Span**, **1 MHz**. Verify the optional preamplifier is off by pressing **AMPTD**, **Signal Path**, **Internal Preamp**, **Off**. The Internal Preamp softkey must be Off in order to test SW3. Press **AMPTD**, **Signal Path**, **uW Path Control**, **Low Noise Path Enable** on the analyzer. A distinct “click” noise should be heard from SW3 when the low noise path is selected. Now press **uW Path Control** and select **Standard Path**. SW3 will “click” again and return to the standard RF path.

Another way of testing this switch is using an RF signal. This is described in the RF Section Troubleshooting chapter, under the high band troubleshooting section, where the 4.8 GHz internal calibrator signal is utilized.

Verifying SW1, SW2, or SW4 Microwave Preselector Bypass Switch (Option MPB)

If the analyzer has frequency range option 508, 513, or 526, the switches which perform the microwave preselector bypass are SW1 and SW2, which operate in unison. If the frequency range option is 544 or 550, SW4 performs this function.

SW1, SW2, and SW4 can be verified three different ways:

- "Click" Test
- Oscilloscope
- RF Signal Tracing

"Click" Test

This test changes between two different path modes. When this is done, a distinct "click" noise from SW1 and SW2 or SW4 can be heard. In the case of SW1 and SW2, since both switches switch at the same time, it is difficult to decipher if one is switching and the other is not.

Press **Mode, Preset** on the analyzer, then press **System**, **Alignments**, **Auto Align**, **Off** to turn of automatic alignments. Press **FREQ, 5 GHZ, Span, 1 MHz, AMPTD, Signal Path, uW Path Ctrl**. Standard Path is the default. Select uW Preselector Bypass and a distinct "click" noise should be heard if the control logic from the A15 Front End Controller board is getting to the appropriate switch.

Oscilloscope Test

Measurements can be made to verify the current logic is getting to the appropriate switch from the A15. In order to perform this measurement, the outer cover and chassis RF bracket on the right hand side of the instrument must be removed. Refer to Chapter 18, "Assembly Replacement Procedures", on page 435 for the removal procedures.

Figure 8-5, Figure 8-6, and Figure 8-7 illustrate the measurement location where the oscilloscope probe should be used to measure the logic. There are two connector bodies with three wires each. On one connector, the three wires are green, black and orange. On the other connector, the three wires are green, black, and yellow. On each connector, black is ground.

On analyzers with Option 508, 513, and 526, both connectors are used; one connects to SW1 and the other to SW2. It does not matter which connector connects to which switch. Both connectors are programmed to behave identically.

However, on analyzers with Option 544 and 550, only the green, black, yellow connector is used to control SW4.

Figure 8-5 SW1 and SW2 Connector Location (Option 508, 513, and 526)

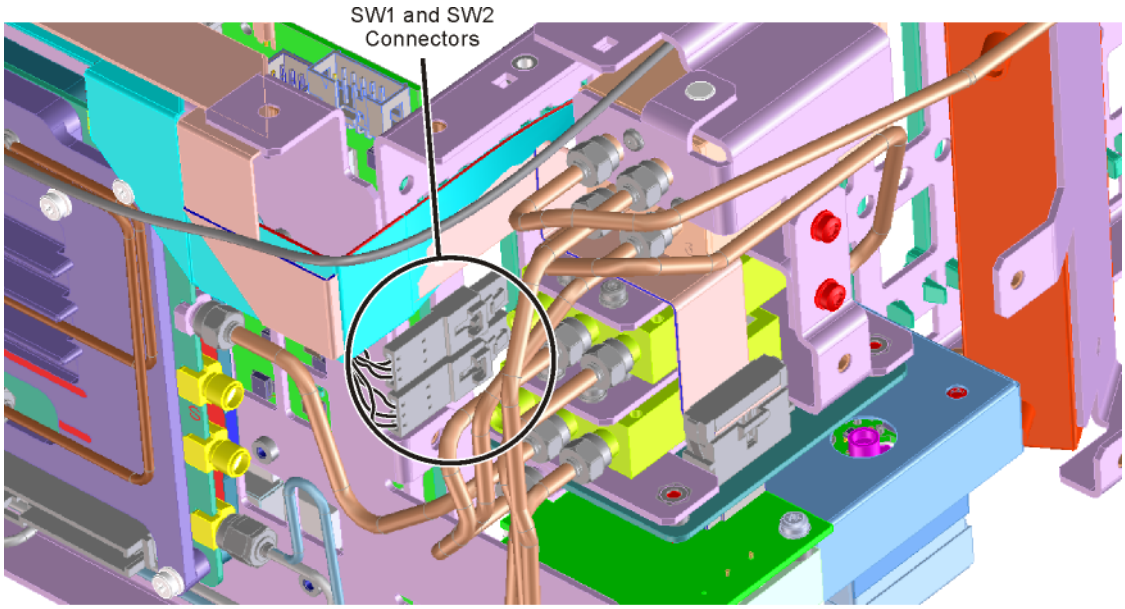

SW1_SW2_conn1

Figure 8-6 SW4 Connector Location (Option 544, 550)

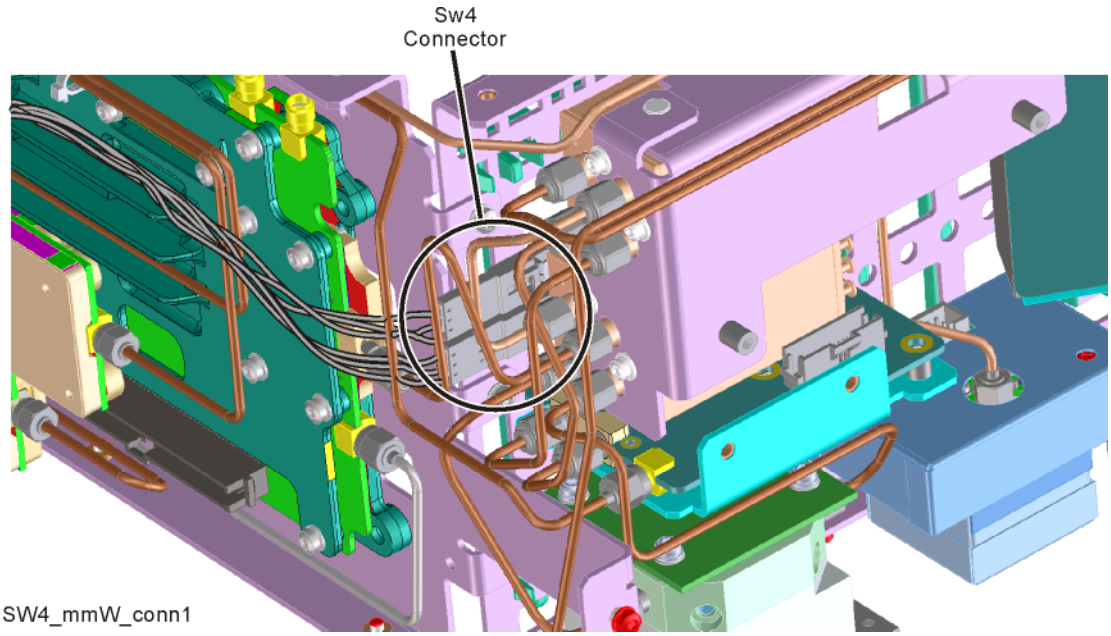

SW4_mmW_conn1

Figure 8-7 Connector Close-up

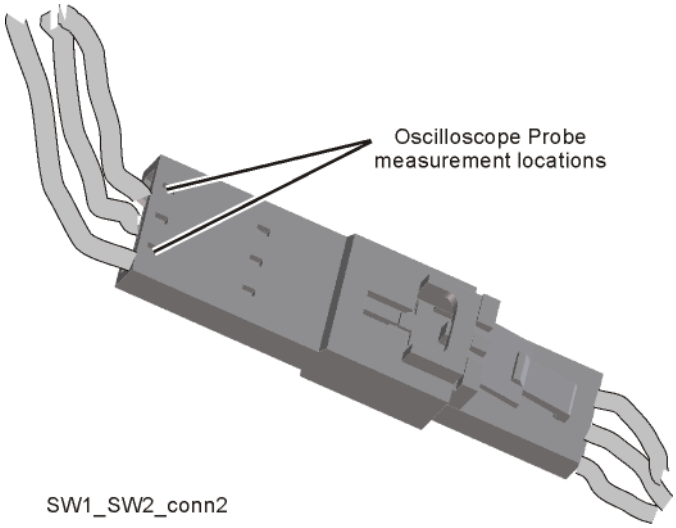

To verify the control logic, press **Mode Preset** on the analyzer, then press **System**, **Alignments**, **Auto Align**, **Off** to turn of automatic alignments. Press **FREQ**, **5 GHz**, **Span**, **1 MHz**, **AMPTD**, **Signal Path**, **uW Path Ctrl**. Standard Path is selected by default. Carefully place the scope probe tip on the conductive portion where the green wire goes into the connector, see Figure 8-8. The black wire is ground.

Figure 8-8 Connector Detail

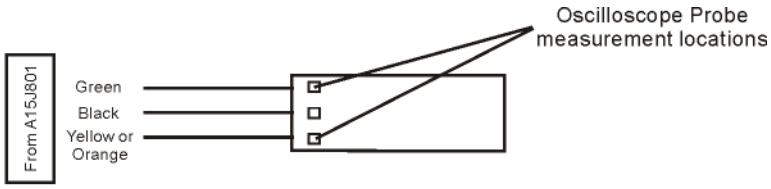

SW1_SW2points

The voltage should be ~21.5 VDC steady state at this point. When switching from Standard Path to uW Preselector Bypass, a negative going pulse to 0 VDC should be seen on the oscilloscope for ~15 mS before the voltage returns to

~21.5 VDC steady state. The oscilloscope triggering may need to be adjusted to see the negative going pulse. This can be tested on both connectors that contain the green wire.

Monitor the yellow or orange wires on each connector, one at a time. The yellow or orange wire starts at ~21.5 VDC. When switching from uW Preselector Bypass to Standard Path, a negative going pulse to 0 VDC should be seen on the oscilloscope for ~15 mS before the voltage returns to ~21.5 VDC steady state.

If both the green wires and the yellow or orange wires measure this pulse correctly, the control logic from the A15, Front End Controller board is operating correctly.

RF Signal Tracing

If an oscilloscope cannot be used, verify other suspect assemblies on the signal path in the RF Input Section to eliminate possible causes for the issue. Refer to Chapter 6, “RF Input Section (RF/Microwave)” for this method of troubleshooting if you are unable to use an Oscilloscope

Verifying Narrowband IF Out (A15J900)

The outer cover and top shield need to be removed to verify A15J900 Narrowband IF output to the A2 Analog IF assembly. Refer to Chapter 18, "Assembly Replacement Procedures" for the removal procedure. Press **Mode**, **Spectrum Analyzer**, **Mode Preset** on the analyzer. Press **Input/Output**, **Input**, **RF Calibrator**, **50 MHz**, **FREQ**, **50 MHz**, **Span**, **0 Hz**, **AMPTD**, **Attenuation**, **10 dB**, **AMPTD**, **Signal Path**, **Internal Preamp Off**, **System**, **Alignments**, **Auto Align**, **Off**. Disconnect the cable marked J900 that plugs into the top of the A15 Front End Controller board and connect an external spectrum analyzer where the cable was plugged in. The IF signal at J900's output should be 322.5 MHz at ~-23 dBm on the external spectrum analyzer if the Front End Controller board is switching this level correctly. If the signal is not correct, remove the cable at J902, IF In, from the Front End Controller board and measure the output of that cable. This should also measure 322.5 MHz at ~-23 dBm. If the output of the J902 cable measures correctly and yet the output of J900 is incorrect, the most probable cause is the A15 Front End Controller board.

If the output of the J902 cable measures incorrectly, troubleshoot the RF Input Section. See Chapter 6, "RF Input Section (RF/Microwave)," or Chapter 7, "RF Input Section (Millimeter-Wave)," depending on the installed frequency range option. Reconnect all cables to their correct location when finished with the measurements.

IMPORTANT When plugging in an mmcx connector, a distinct "snap" should be heard when the cable is seated correctly.

Verifying Wideband IF Out (A15J901, Option B40, B85, B1X, B2X, B5X only)

The outer cover and top shield need to be removed to verify A15J901 Wideband IF output. Refer to Chapter 18, "Assembly Replacement Procedures" for the removal procedure. Press **Mode**, **IQ Analyzer (Basic)**, **Mode Preset** on the analyzer. Press **Input/Output**, **Input**, **RF Calibrator**, **50 MHz**, **FREQ**, **50 MHz**, **AMPTD**, **Attenuation**, **10 dB**, **AMPTD**, **Signal Path**, **Internal Preamp Off**, **System**, **Alignments**, **Auto Align, Off**. Disconnect the cable marked J901 that plugs into the Front End Controller board and connect an external spectrum analyzer where the cable was plugged in. J901's IF output will vary depending on the IF path that is chosen. Press **Meas Setup**, **IF Path** and select the path corresponding to each analysis bandwidth option that is installed. If the switch path is working correctly in the A15 Front End Controller board, the external spectrum analyzer should measure an IF frequency at ~-30 dBm according to Table 8-13.

Table 8-13 Option IF Path IF Frequency

B40	40 MHz	250 MHz
B85	85 MHz	300 MHz
B1X	160 MHz	300 MHz
B2X	255 MHz	750 MHz
B5X	510 MHz	877.148 MHz

In order for these IF levels to measure correctly, the IF input at A15J902 must be correct. If the signal at J901 is not correct, remove the cable at J902, IF In, from the Front End Controller board and measure the output of that cable. This signal should be the same IF frequency and power as from J901. If the output of the J902 cable measures correctly and yet the output of J901 is incorrect, the most probable cause is the A15 Front End Controller board.

If the output of the J902 cable measures incorrectly, troubleshoot the RF Input Section. See Chapter 6, “RF Input Section (RF/Microwave),” or Chapter 7, “RF Input Section (Millimeter-Wave),” depending on the installed frequency range option.

Reconnect all cables to their correct location when finished.

Verifying Aux IF Out, Rear Panel (Option CR3, CRP, ALV only)

The Aux IF output connector on the rear panel of the PXA is installed on each instrument; however the actual Aux IF output frequency will vary depending on the options installed. These options are all enabled with a license key. The first step in verifying the Aux IF output is the make sure the option is licensed by pressing **System**, **Show System** on the analyzer and make sure the option identifies itself in the table.

The IF switch path and frequency generation occurs on the A15, Front End Controller board. This troubleshooting procedure provides the instrument setups to verify options CR3, CRP and ALV. Test the Aux IF output based on the options installed in the analyzer.

Standard PXA

No test to perform.

Verifying 2nd IF Output (Option CR3)

Press the following keys on the analyzer:
Mode, **Spectrum Analyzer**, **Mode Preset, Input/Output, Input, RF Calibrator, 50 MHz, FREQ, 50 MHz, Span, 0 Hz, System, Alignments, Auto Align, Off, Input/Output, Output, Aux IF Out, Second IF**

Connect the Aux IF Output on the rear panel to the RF Input of a functioning spectrum analyzer. If the A15 Front End Controller is switching the IF correctly, you should measure 322.5 MHz at –35 dBm ±3 dB as per Figure 8-9.

Figure 8-9 322.5 MHz

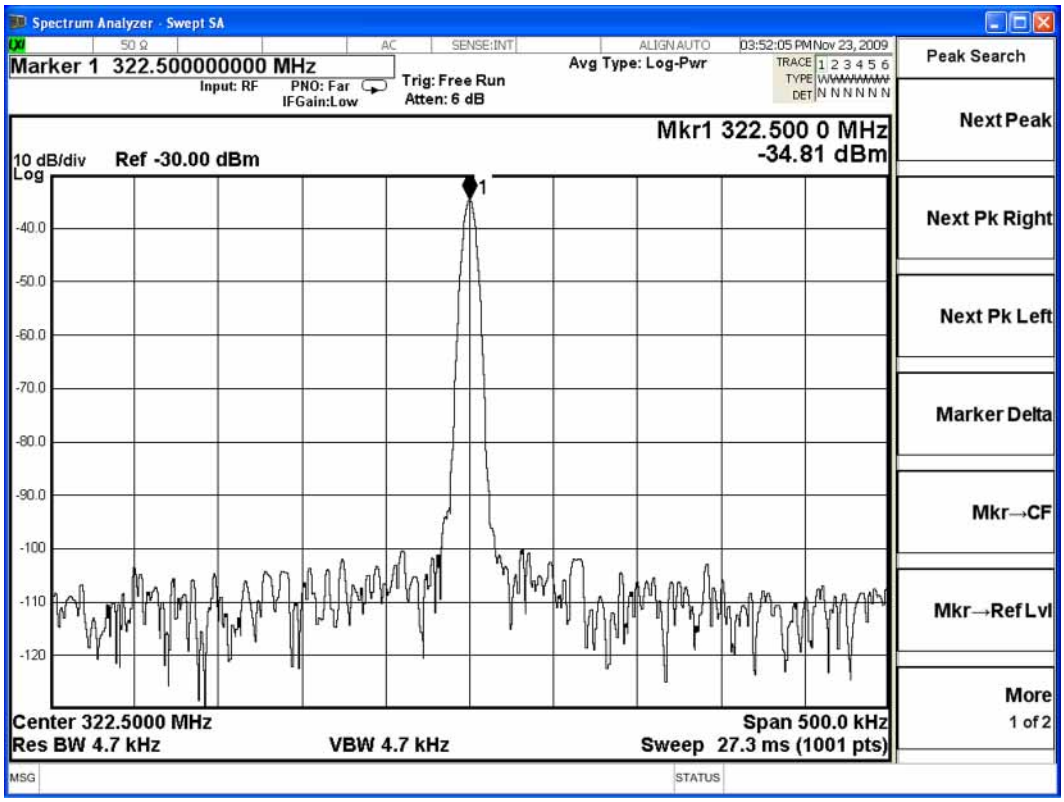

Verifying Arbitrary IF Output (Option CRP)

Press the following keys on the analyzer:
Mode, **Spectrum Analyzer**, **Mode Preset**, **Input/Output**, **Input, RF Calibrator, 50 MHz**, **FREQ**, **50 MHz**, **Span**, **0 Hz**, **System**, **Alignments**, **Auto Align**, **Off**, **Input/Output**, **Output**, **Aux IF Out**, **Arbitrary IF**.

The default is 70 MHz, which can be measured on a functioning spectrum analyzer. The amplitude level should be –35 dBm ±3 dB as per Figure 8-10. With the Arbitrary IF as the active function, you can vary the IF from 10 MHz to 70 MHz in 500 kHz steps and measure the Aux IF output. The amplitude level should remain fairly flat across the entire arbitrary IF output range.

Figure 8-10 70 MHz

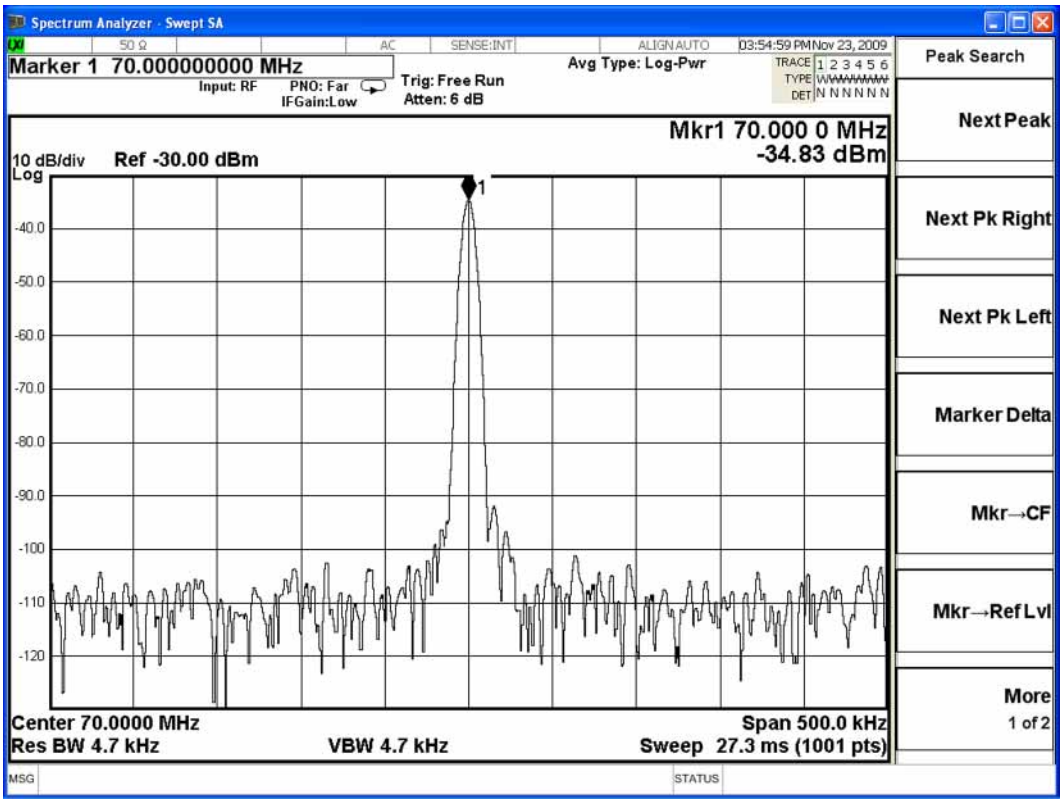

Verifying Auxiliary Log Video Output (Option ALV)

Equipment needed:

Volt meter

Adapters and cables to connect the volt meter to the Aux IF Out SMA connector on the spectrum analyzer rear panel.

Signal source

Signal source settings:

Frequency: 1 GHz (CW)

Amplitude: –10 dBm

Press the following keys on the analyzer:
Mode, Spectrum Analyzer, Mode Preset, FREQ, **1 GHz**, and set the center frequency to 1 GHz. Press **Span, Zero Span, Input/Output, Output, Aux IF Out, Fast Log Video**.

Connect the rear panel Aux IF Out of the signal analyzer to a voltmeter set to measure DC volts.

Verify that signal level appears on the analyzer screen positioned 1 division below top graticule line.

Voltmeter should measure approximately 1.4 Vdc.

Reduce source output power to –20 dBm. Signal should now appear one division lower, and voltmeter should measure approximately 1.2 VDC.

Reduce source output power to –30 dBm. Signal should now appear one division lower, and voltmeter should measure approximately 1.0 VDC.

9 Analog/Digital IF

What You Will Find in This Chapter

The following information is presented in this chapter:

1. Theory of operation of the IF section.
2. Isolating the cause of a hardware problem by verifying the functionality of assemblies in the IF section signal path.

NOTE Each of the following sections first describes how the assembly works, then gives information to help you troubleshoot the assembly. Each description explains the purpose of the assembly, describes the main components, and lists external connections to the assembly.

The following sections are found in this chapter:

A2 Analog IF Assembly Description on page 212

A2 Analog IF Assembly Theory of Operation on page 213

A2 Analog IF Troubleshooting on page 216

A3 Digital IF Assembly Description on page 223

A3 Digital IF Assembly Theory of Operation on page 224

A3 Digital IF Troubleshooting on page 226

A2 Analog IF Assembly Description

When the 10 MHz or 25 MHz IF Path is selected, or when any swept measurement is made, the analyzer's RF input signal is down converted to a 322.5 MHz intermediate frequency in the A13 RF Front End Assembly. This 322.5 MHz signal is routed through the IF MUX on the A15 Front End Controller and then input to the A2 Analog IF Assembly.

The Analog IF down converts the 322.5 MHz signal to a final 22.5 MHz intermediate frequency. In order to obtain optimal dynamic range and minimize unwanted spurious signals, this signal is filtered, amplified and attenuated throughout this assembly. The final 22.5 MHz signal goes through a series of variable band pass filters each having a specific bandwidth. Three things determine the signal path and which filters are chosen:

- Instrument resolution bandwidth (RBW) setting
- Application used
- Mode applied

This assembly contains one of the two burst carrier trigger (BCT) circuits for performing mobile communication measurements. The BCT on the A2 assembly is relatively narrowband. The other BCT circuit is part of the IF MUX on the A15 Front End Controller and has a much wider bandwidth.

The output of the A2 assembly is a filtered 22.5 MHz signal that goes to one of the two ADCs on the A3 Digital IF Assembly.

Inputs to the A2

322.5 MHz signal (from A15 Front End Controller)

LO Input (300 MHz signal from A16 Reference Assembly)

22.5 MHz Cal Comb Signal (from the A3 Digital IF Assembly)

Outputs from the A2

22.5 MHz signal (to A3 Digital IF Assembly)

RF Trigger Detector (to A3 Digital IF Assembly)

A2 Analog IF Assembly Theory of Operation

NOTE Refer to Chapter 15, “Block Diagrams.”

Input Switch and Filter

A 322.5 MHz input signal is received from the A15 Front End Controller. The signal then goes through a band pass filter centered at 322.5 MHz with a 25 MHz bandwidth. A comb cal signal can be automatically switched in at the input of the assembly to calibrate the prefilters.

Step Attenuator and Amplifier

A 1 dB step attenuator follows to compensate for band gain differences. The signal then goes through a high-dynamic range amplifier.

Image Filters

One of three different filter paths will be selected automatically, depending on the analyzer mode.

- The through path is selected in IQ Analyzer Mode and wide-band demod.
- The 12 MHz ceramic bandpass filter is used for normal Signal Analyzer swept and FFT operation.
- The 300 kHz Surface Acoustic Wave (SAW) is used for ACP modes.

Mixer

There are two mixers that reside on this assembly. The first mixer is used to down convert the 322.5 MHz input to the final 22.5 MHz IF. The other mixer is described in the IF Comb Cal section.

3rd LO

The 300 MHz 3rd LO signal comes from the A16 Reference Assembly and conditions it for use as an LO in the two mixers that reside on this assembly. The third LO power is ~ +10 dBm to optimize the conversion efficiency of the first mixer.

IF Comb Cal

The 2nd mixer is used to mix the 300 MHz LO from the Reference Assembly with the 22.5 MHz cal comb signal from the A3 Digital IF to allow calibration of the prefilters and overall passband phase and amplitude. The signal is attenuated by 20 dB if necessary.

Post Down Conversion Amplification and Prefiltering

The 22.5 MHz IF goes through a fixed gain amplifier. Then prefilters are switched in and out. The signal then goes through a variable gain amplifier.

The prefilters provide four single-pole filters to limit the bandwidth of the signal reaching the ADC on the A3 Digital IF assembly. There are five different signal paths for the 22.5 MHz IF when using Signal Analyzer swept mode:

1. LC wide
2. LC narrow
3. Crystal wide
4. Crystal narrow
5. Through path

The LC wide signal path is used when the analyzer Res BW setting is 180 kHz to 390 kHz.

The LC narrow signal path is used when the analyzer Res BW setting is 30 kHz to 160 kHz.

The Crystal wide signal path is used when the analyzer Res BW setting is 4.3 kHz to 27 kHz.

The Crystal narrow signal path is used when the analyzer Res BW setting is < 3.9 kHz.

The through path is used when the analyzer Res BW setting is 430 kHz and greater in analyzer swept mode.

NOTE In IQ Analyzer mode or in Spectrum Analyzer mode with Sweep Type of FFT, the analyzer span setting determines the pre-filter settings.

Anti-Alias Filter and Final Amplifier

The anti-alias filters attenuate unwanted out-of-band noise and distortion products. The first anti-alias filter is centered at 22.5 MHz and is 25 MHz wide.

The signal can bypass the second anti-alias filter when the analyzer utilizes either the IQ Analyzer swept, or wide-band demod.

The through path is selected when the image filter is in the 25 MHz mode (for IQ Analyzer swept and wide-band demod)

In all other cases the signal will pass through the second 12 MHz anti-alias filter.

The step gain block provides an additional switchable 10 dB gain to overcome the ADC noise floor and provide an additional 2 dB of analyzer sensitivity.

Burst Carrier Trigger

The Burst Carrier Trigger detector provides a binary signal to be used as a trigger based on the presence of an RF input signal or not. The variable gain amplifiers drive a detector and its output drives a comparator which generates the trigger signal.

A2 Analog IF Troubleshooting

There are three steps to verify the A2 Analog IF Assembly.

- Measure the input power and frequency accuracy of the 322.5 MHz signal (from the A13 RF Front End assembly)
- Measure the output power and frequency accuracy of the 22.5 MHz signal (to the A3 Digital IF Assembly)
- Measure the 300 MHz input LO signal (from the A16 Reference Assembly)

Verifying the 322.5 MHz Input Power

1. Turn the instrument off.
2. Remove instrument cover. Refer to Chapter 18, “Assembly Replacement Procedures” in this service guide.
3. Turn on the PXA Signal Analyzer and wait for the instrument to complete the boot up process.
4. Press **System**, **Alignments**, **Auto Align**, **Off**.
5. Press **Input/Output**, **Input, RF Calibrator**, **50 MHz**.
6. Verify the 50 MHz signal is at –25 dBm on the analyzer display by pressing **FREQ**, **50 MHz**, **Span**, **1 MHz**, **Peak Search** on the PXA. The marker readout should be 50 MHz at –25 dBm ± 3 dB. If this reference signal is measuring incorrectly, see Chapter 6, “RF Input Section (RF/Microwave)” in this service guide.
7. Press **Span**, **Zero Span**. Verify the input attenuator on the PXA is set to 10 dB. Look near the top of the display near the center and verify that **Atten: 10 dB** is visible. If needed, change the input attenuator by pressing **AMPTD**, **Attenuation**, **10 dB** on the analyzer.

8. Carefully disconnect cable W25 at A15J900 as shown in Figure 9-1.

Figure 9-1 A15 RF Front End Controller

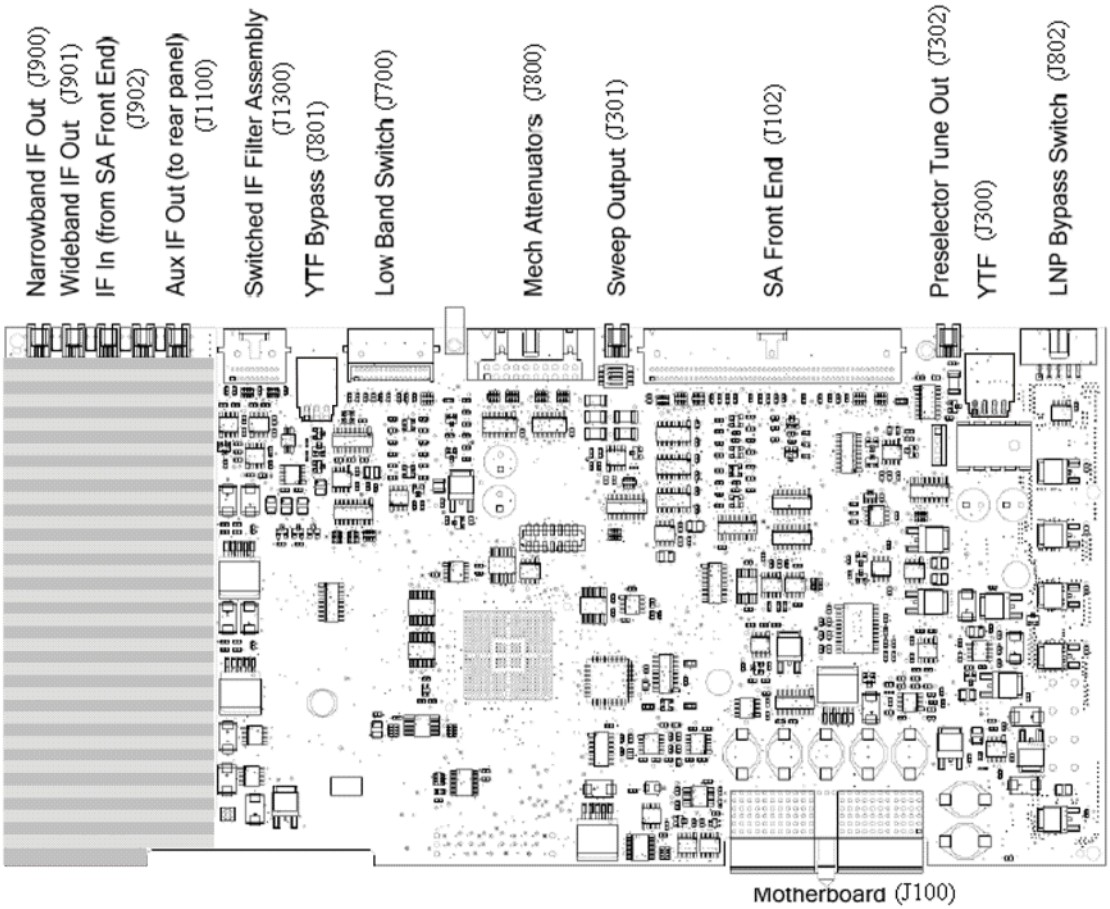

pxafec2

9. Connect A15J900 to a functioning spectrum analyzer using the appropriate MMCX connectors and cables.

10. Press **Freq**, **322.5 MHz**, **Span, 1 MHz**, **Peak Search** on the functioning spectrum analyzer.

11. The analyzer should read 322.5 MHz at –23 dBm ± 3 dB as shown in Figure 9-2.

Figure 9-2 A15 322.5 MHz Output

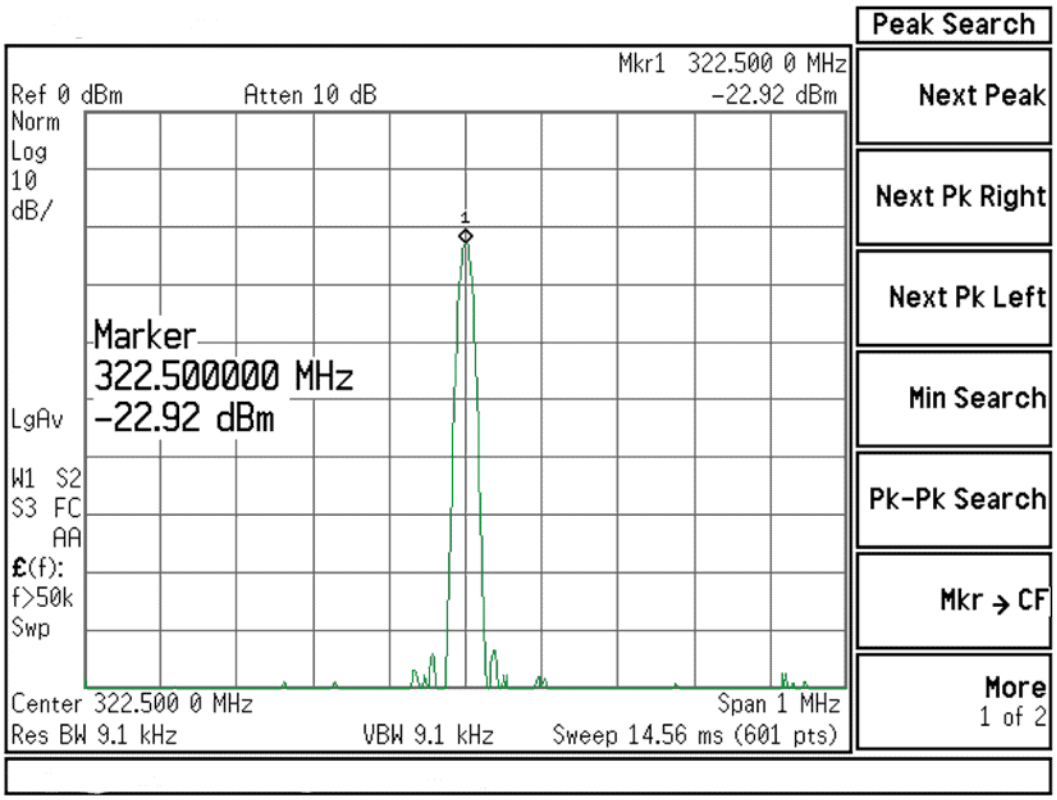

NOTE If the 322.5 MHz signal is not measuring the correct power level, refer to Chapter 6, "RF Input Section (RF/Microwave)," in this service guide.

Reconnect W25 to A15J900.

IMPORTANT Measuring at this location is for convenience. The 322.5 MHz signal is an output at A15J900. Since the W25 cable connects from this output to the input of the Analog IF assembly at A2J100, the small coaxial cable has not been tested at the A2J100 end. See Figure 9-5 for connector location.

Verifying the 22.5 MHz Output Power

1. Turn the instrument off.
2. Turn the instrument over so the bottom side of the analyzer is facing up.
3. Turn on the PXA Signal Analyzer and wait for the instrument to complete the boot up process.

NOTE The instrument can be logged into remotely so that the application menu is not upside down.

4. Press **System**, **Alignments**, **Auto Align**, **Off**.
5. Press **Input/Output**, **Input, RF Calibrator**, **50 MHz**.
6. Verify the 50 MHz signal is at –25 dBm by pressing **FREQ**, **50 MHz**, **Span**, **1 MHz**, **Peak Search** on the analyzer. The marker readout should be 50 MHz at –25 dBm ± 3 dB. If this reference signal is measuring incorrectly, see Chapter 6, "RF Input Section (RF/Microwave)" in this service guide.
7. Press **Span**, **Zero Span**. Verify the input attenuator on the PXA is set to 10 dB. Look near the top of the display near the center and verify that **Atten: 10 dB** is visible. If needed, change the input attenuator by pressing **AMPTD**, **Attenuation**, **10 dB** on the analyzer.
8. Referring to Figure 9-3, carefully disconnect the W42 cable at A3J19.

Figure 9-3 A3 Digital IF Cables

9. Connect the W42 cable to the MMCX (f) to SMA (m or f) adapter. Use an appropriate cable to go from the SMA connector to the RF input of a functioning spectrum analyzer to verify the 22.5 MHz IF and amplitude is correct.

NOTE

Alternatively, if an MMCX (f) connector is not available, use a cable or SMA adapter with an MMCX (m) connector to measure from A2J601, the other end of W42 (see Figure 9-5).

10. Press **Freq**, **22.5 MHz**, **Span**, **1 MHz**, **Peak Search** on the functioning spectrum analyzer.

11. The analyzer marker should read 22.5 MHz at –25 dBm ± 4 dB as shown in Figure 9-4.

Figure 9-4 A2 Analog IF Output

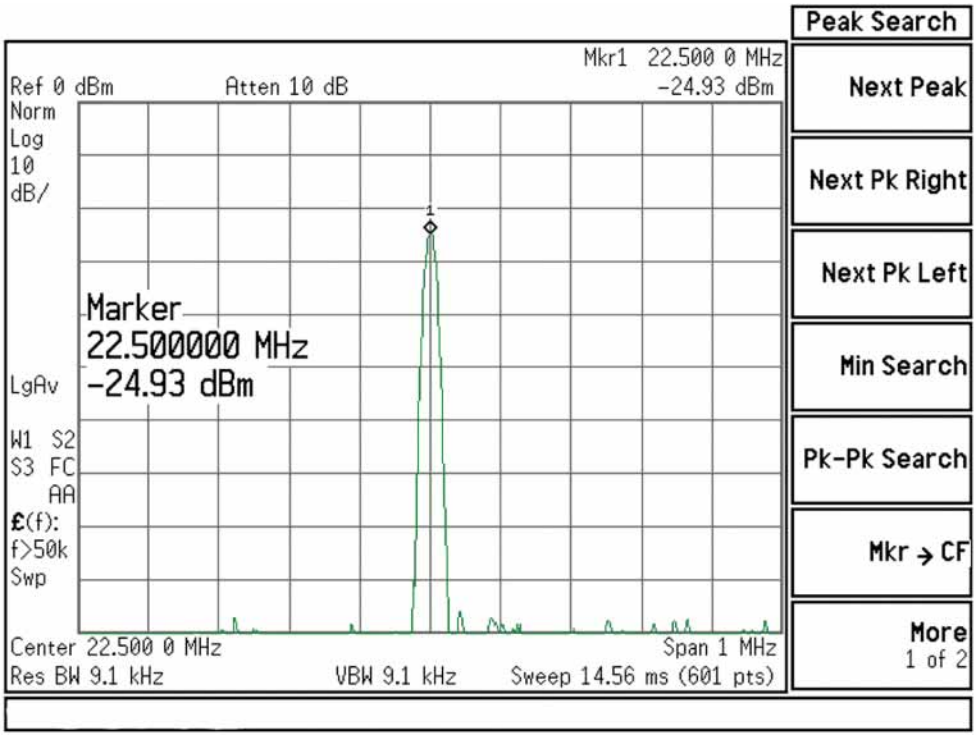

12. If the 22.5 MHz signal is not measuring the correct power level, do not assume the Analog IF is the most probable cause until the 3rd LO frequency and power level have been verified below.

13. If the 22.5 MHz signal is within tolerance, carefully reconnect the W42 cable to A3J19.

NOTE

You should hear a distinct snap when reconnecting the W42 cable. If this cable is not installed properly, intermittent signal fluctuations may occur on the analyzer display.

Verifying the 300 MHz LO Input Power from the A16 Reference Assembly

1. Referring to Figure 9-5, carefully disconnect the W36 at A2J300.

Figure 9-5 A2 Analog IF Cables

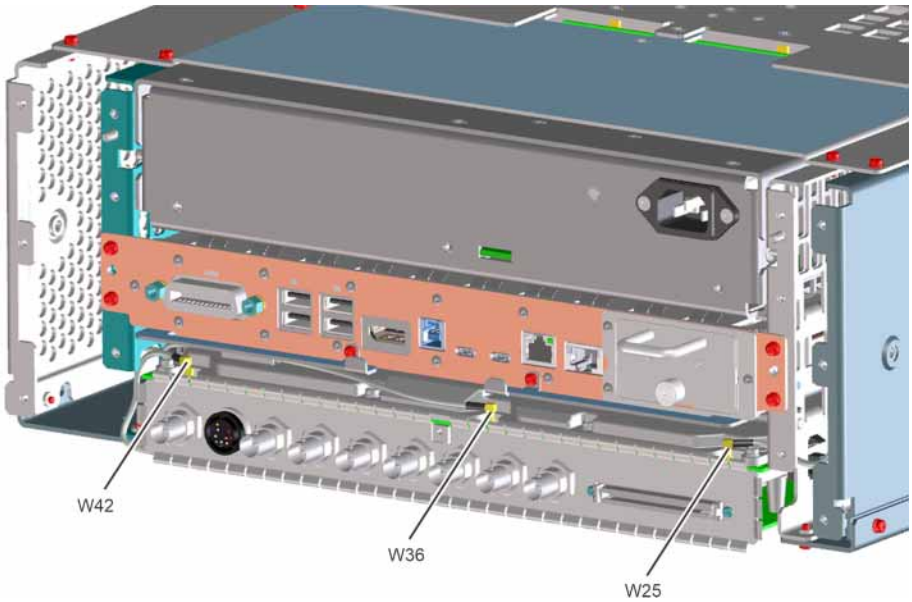

2. Connect the W36 cable to the MMCX (f) to SMA (m or f) adapter. Use an appropriate cable to go from the SMA connector to the RF input of a functioning spectrum analyzer.

NOTE Alternatively, if an MMCX (f) connector is not available, use a cable or SMA adapter with an MMCX (m) connector to measure from A16J711, the other end of W36 (see Figure 10-19).

3. Press **Freq**, **300 MHz**, **Span**, **1 MHz**, **Amplitude**, **10 dBm**, **Peak Search** on the functioning spectrum analyzer.

4. The analyzer marker should read 300 MHz at 10 dBm ± 3 dB as shown in Figure 9-6.

Figure 9-6 300 MHz LO

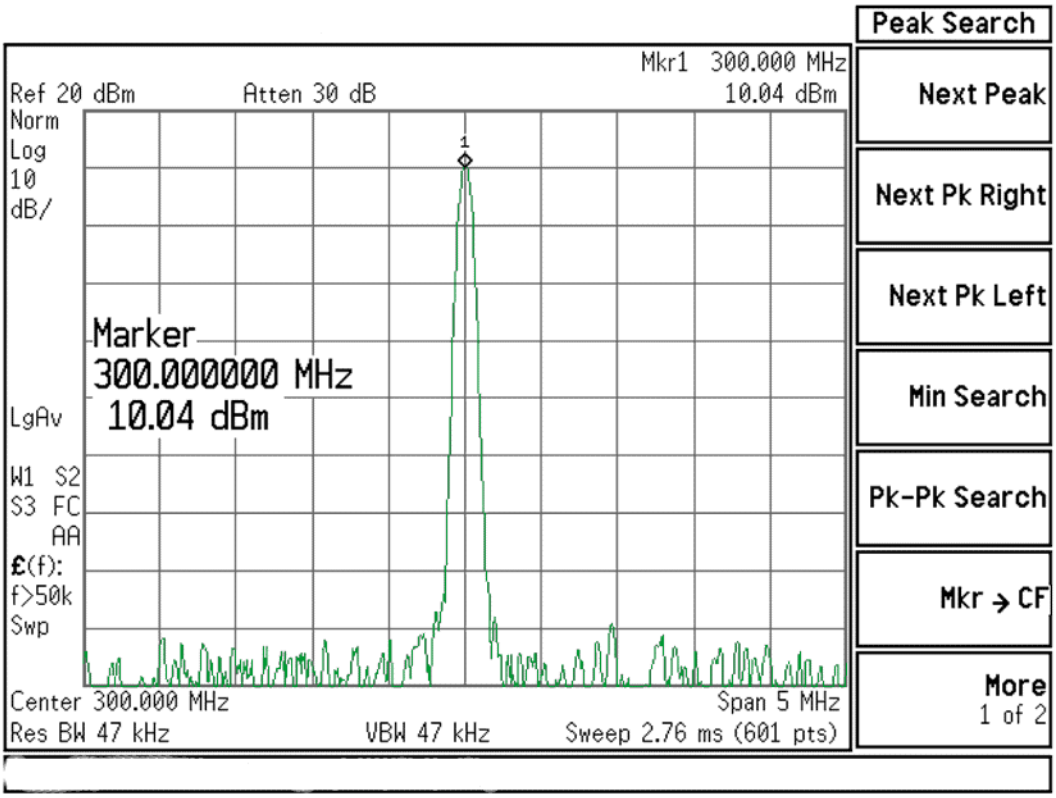

5. If the 300 MHz signal is not measuring the correct power level, see the "A16 Reference Troubleshooting" section in this service guide.

6. If the 300 MHz LO is measuring the correct power level and frequency and the 22.5 MHz signal is low, the most probable cause is the A2 Analog IF assembly.

A3 Digital IF Assembly Description

The A3 Digital IF has circuitry that is needed to analyze complex communication signals that can occupy up to 40 MHz of information bandwidth. This assembly has two inputs:

1. **The final 22.5 MHz IF from the A2 Analog IF for IF bandwidth paths up to 25 MHz wide. This input is used for swept and FFT spectrum analysis.**
2. **The 250 MHz IF from the A15 Front End Controller for IF bandwidth of 40 MHz.**

Each input has a separate ADC that processes the time domain continuous data into I/Q (in-phase and quadrature) signals before sending the data to the A4 CPU assembly for further processing and front panel display.

The Digital IF has the following main functions:

- Digitizes the 22.5 MHz and the 250 MHz IF signals
  - 16 bit ADC with a 100 MHz sample rate to digitize the 22.5 MHz IF
  - 12 bit ADC with a 200 MHz sample rate to digitize the 250 MHz IF
- DSP for standard spectrum analysis
- Capture memory for complex signals
- Noise Source Control
- Dither for final I.F
- Provides the alignment sequence generator for wide band alignments
- Provides wide band Comb Calibration Signal
- Trigger interpolation and associated alignment

A3 Digital IF Assembly Theory of Operation

NOTE Refer to Chapter 15, “Block Diagrams.”

Data Acquisition

The 22.5 MHz IF comes from the A2 Analog IF assembly. The input level to the A3 Digital IF assembly is –25 dBm when observing the 50 MHz calibrator signal. The IF input has a 25 MHz bandwidth centered at 22.5 MHz. The analog circuitry leading to the ADC converts the singled ended signal from the Analog IF to differential required by the ADC. In addition, it is part of a filter, part of which is on the AIF, which improves distortion. Finally, it couples in the dither signal. The ADC is a 16 bit device sampling continuously at 100 Ms/second.

The 250 MHz IF comes from the A15 Front End Controller. The input level is approximately -25 dBm when observing the 50 MHz calibrator signal. The IF input has a 40 MHz bandwidth centered at 250 MHz. The analog circuitry leading to the ADC converts the single-ended signal from the Front End Controller to differential required by the ADC. Finally, it couples in the dither signal. The ADC is a 12-bit device sampling continuously at 200 Ms/second.

Rear Panel Triggers

The board has two trigger inputs and two trigger outputs all used via BNC connectors on the rear panel. The trigger inputs are used when an external device has a trigger signal and the user wants to use that external trigger to trigger the signal analyzer. The trigger outputs are used to synchronize other pieces of test equipment to the PXA. These outputs are configurable through the Input/Output menu via the front panel of the instrument.

The trigger inputs each allow trigger levels to be set from –5 to +5 volts using the control DAC. The circuits have relatively high input impedance. The trigger outputs have 50 Ω source impedance with TTL drive levels into no load.

Control DAC

The control DAC is used to set trigger levels and the gain of the reconstruction system. All three outputs can be adjusted from –2.5 to +2.5 volts.

Sample Rate Generator

The 10 MHz reference signal comes from the A16 Reference Assembly. This signal is fairly high power at +10 dBm. The signal goes through a 10 MHz to 30 MHz tripler. A 0 to 5V, 10 MHz square wave is generated. Capacitors form a single-pole band pass filter to select the 3rd harmonic, 30 MHz.

The signal then passes through a 30 MHz to 90 MHz tripler. A 0 to 5V, 30 MHz square wave is generated. Capacitors form a single-pole band pass filter to select the 3rd harmonic, 90 MHz.

Noise Source Voltage Regulator

Various external noise sources can be connected to the rear panel of the PXA Signal Analyzer. These noise sources require a very accurate 28 volt DC power supply.

The 28 volt BNC output connector is used with the 346 series noise sources.

The Smart Noise Source (SNS) interface includes power switching for the 28 volt and 15 volt power supply. In addition, it has buffers to interface to the SNS I2C bus for control and read back of ENR data automatically. The SNS connector is used with the SNS series noise sources.

DSP

The signal from the ADC is sent to the Digital Signal Processor.

Digital Bus Common Mode Filtering

The Digital Bus is a real time digital interface. It is sometimes referred to as Messenger or LVDS. The implementation on the Digital IF is unidirectional, meaning it can only source data, not receive it. Common mode filtering is required to translate the digital ground referenced signals to analog ground at the rear panel.

A3 Digital IF Troubleshooting

Verifying the 22.5 MHz Input Power

1. Turn the instrument off.
2. Turn the instrument over so the bottom side of the analyzer is facing up.
3. Turn on the PXA Signal Analyzer and wait for the instrument to complete the boot up process.

NOTE The instrument can be logged into remotely so that the application menu is not upside down.

4. Press **System**, **Alignments**, **Auto Align**, **Off**.
5. Press **Input/Output**, **Input, RF Calibrator**, **50 MHz**.
6. Verify the 50 MHz signal is at –25 dBm by pressing **FREQ**, **50 MHz**, **Span**, **1 MHz**, **Peak Search** on the analyzer. The marker readout should be 50 MHz at –25 dBm ± 3 dB. If this reference signal is measuring incorrectly, see Chapter 6, “RF Input Section (RF/Microwave)” in this service guide.
7. Press **Span**, **Zero Span**. Verify the input attenuator on the PXA is set to 10 dB. Look near the top of the display near the center and verify that **Atten: 10 dB** is visible. If needed, change the input attenuator by pressing **AMPTD**, **Attenuation**, **10 dB** on the analyzer.
8. Referring to Figure 9-3, carefully disconnect the W42 cable at A3J19.

Figure 9-7 A3 Digital IF Cables

9. Connect the W42 cable to the MMCX (f) to SMA (m or f) adapter. Use an appropriate cable to go from the SMA connector to the RF input of a functioning spectrum analyzer to verify the 22.5 MHz IF and amplitude is correct.

NOTE

Alternatively, if an MMCX (f) connector is not available, use a cable or SMA adapter with an MMCX (m) connector to measure from A2J601, the other end of W42 (see Figure 9-5).

10. Press **Freq**, **22.5 MHz**, **Span**, **1 MHz**, **Peak Search** on the functioning spectrum analyzer.

11. The analyzer marker should read 22.5 MHz at –25 dBm ± 4 dB as shown in Figure 9-4.

Figure 9-8 A2 Analog IF Output

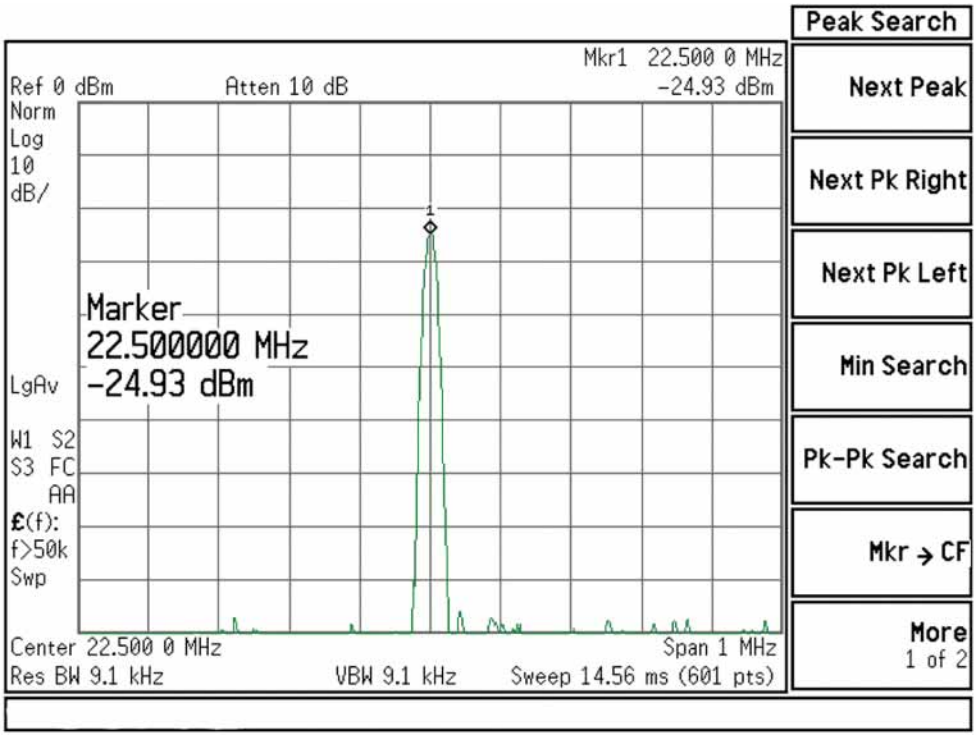

12. If the 22.5 MHz signal is not measuring the correct power level, do not assume the Analog IF is the most probable cause until the 3rd LO frequency and power level have been verified below.

13. If the 22.5 MHz signal is within tolerance, carefully reconnect the W42 cable to A3J19.

NOTE

You should hear a distinct snap when reconnecting the W42 cable. If this cable is not installed properly, intermittent signal fluctuations may occur on the analyzer display.

Verifying the 250 MHz IF Input Power (Option B40 only)

NOTE Perform this procedure only if the analyzer is equipped with Option B40, Analysis Bandwidth, 40 MHz.

1. Perform an instrument shutdown.
2. Remove the cover of the PXA Signal Analyzer. Refer to Chapter 18, “Assembly Replacement Procedures”, on page 435 in this service guide.
3. Turn the instrument over so that the bottom side of the analyzer is facing up.
4. Turn on the PXA Signal Analyzer and wait for the instrument to complete the boot up process.
5. Press **Mode**, **IQ Analyzer (Basic)**, **Meas Setup**, **IF Path**, **40 MHz**.
6. Press **System**, **Alignments**, **Auto Align**, **Off**.
7. Press **Input/Output**, **Input, RF calibrator**, **50 MHz**.
8. Verify the 50 MHz signal is at –25 dBm by pressing **FREQ**, **50 MHz**, **Span**, **1 MHz**, **Peak Search** on the analyzer. The maker readout should be 50 MHz at –25 dBm ± 3 dB. If this reference signal is measuring incorrectly, see Chapter 6, “RF Input Section (RF/Microwave)”, on page 119 in this service guide.
9. Press **Meas**, **IQ Waveform**. Verify the input attenuator on the PXA is set to 10 dB. Look near the top of the display near the center and verify **Atten: 10 dB** is visible. If needed change the input attenuator by pressing **AMPTD**, **Attenuation**, **10 dB** on the analyzer
10. Referring to Figure 9-9, carefully disconnect the cable from A3J15.

    The reference designator for this cable and the output of the 250 MHz IF signal on the other end both depend on the highest installed analysis bandwidth option:

    - W26 from A15J901 on the A15 FEC (Option B40)
    - W40 from A25J102 on the A25 WBAIF (Options B1X and B85)
    - W71 from A25J18 on the A25 WBAIF (Options B2X and B5X)

Figure 9-9 A3 Digital IF Cables

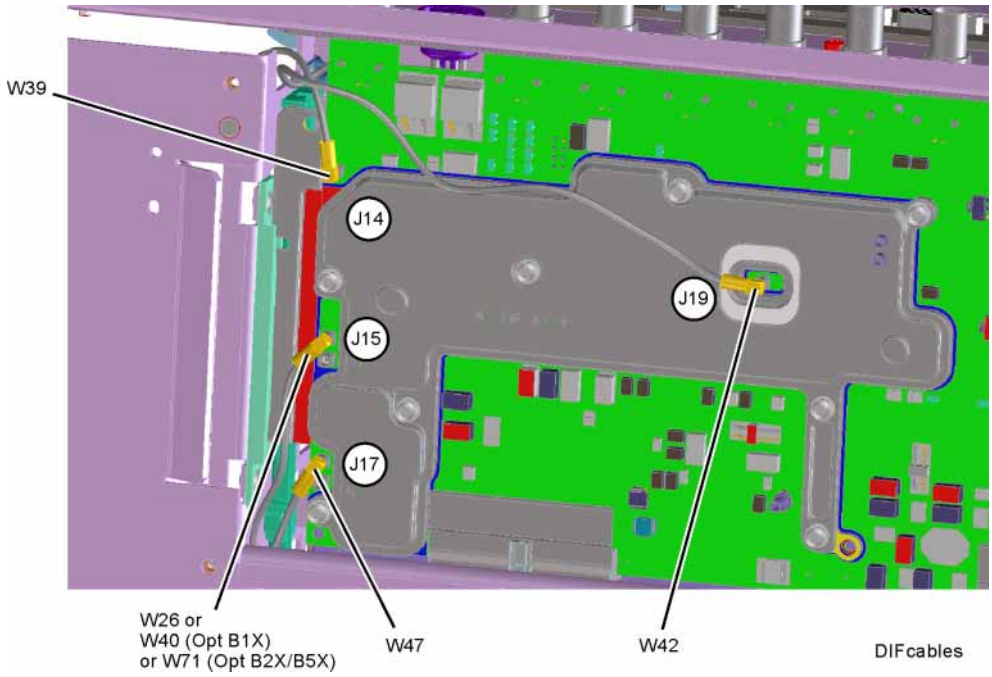

11. Connect the cable to the MMCX (f) to SMA (m or f) adapter. Use an appropriate cable to go from the SMA connector to the RF input of a functioning spectrum analyzer to verify the 250 MHz IF signal frequency and amplitude is correct.

NOTE

Alternatively, if an MMCX (f) connector is not available, use a cable or SMA adapter with an MMCX (m) connector to measure from the input at the other end of the cable for A3J15.

12. Press **Freq**, **250 MHz**, **Span**, **1 MHz**, **Peak Search** on the functioning spectrum analyzer.

13. The analyzer marker should read 250 MHz at –30 dBm ± 4 dB as shown in Figure 9-12.

Figure 9-10 250 MHz IF Input

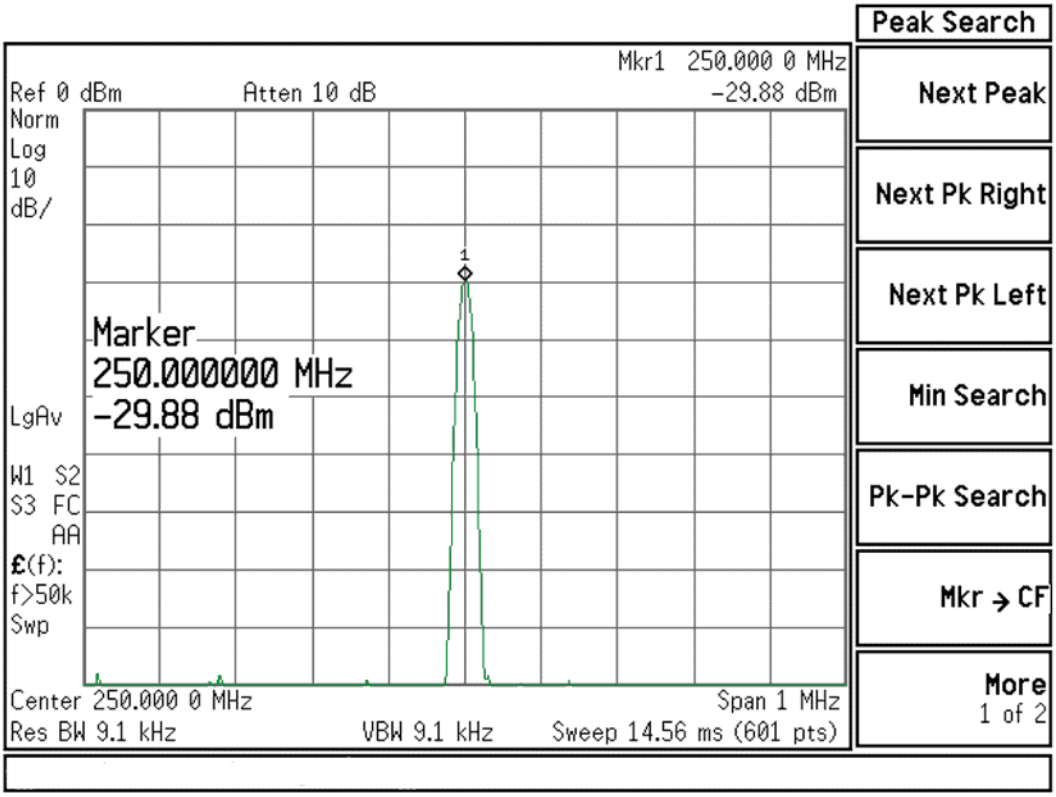

14. If the 250 MHz signal is not measuring the correct power level, troubleshoot the A15 Front End Controller or A25 Wideband Analog IF assembly, depending on the analysis bandwidth option.

15. If the 250 MHz signal is within tolerance, carefully reconnect the W26 or W40 cable to A3J15.

NOTE

You should hear a distinct snap when reconnecting the cable. If this cable is not installed properly, intermittent signal fluctuations may occur on the analyzer display.

Verifying the 100 MHz Reference Input

1. Perform an instrument shutdown.
2. Remove the cover of the PXA Signal Analyzer. Refer to Chapter 18, “Assembly Replacement Procedures”, on page 435 in this service guide.
3. Turn the instrument over so that the bottom side of the analyzer is facing up.
4. Turn on the PXA Signal Analyzer and wait for the instrument to complete the boot up process.
5. Press **System**, **Alignments**, **Auto Align**, **Off**.
6. Press **Input/Output**, **Input, RF calibrator**, **50 MHz**.
7. Referring to Figure 9-11, carefully disconnect W39 cable at A3J14.

Figure 9-11 A3 Digital IF Cables

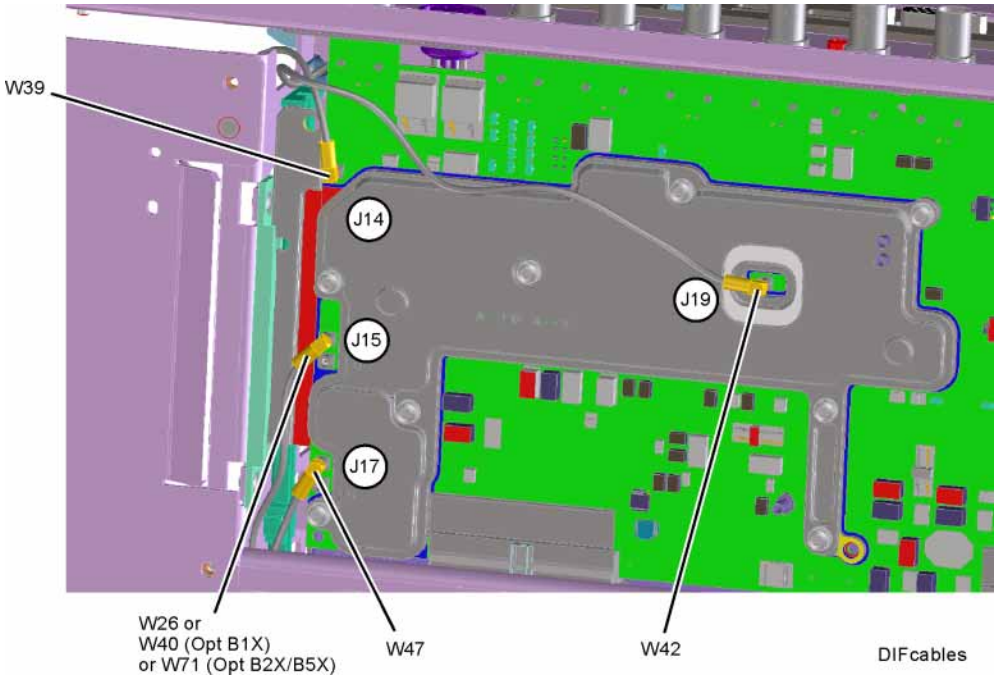

8. Connect the W39 cable to the MMCX (f) to SMA (m or f) adapter. Use an appropriate cable to go from the SMA connector to the RF input of a functioning spectrum analyzer to verify the 100 MHz reference frequency and amplitude is correct.

NOTE

Alternatively, if an MMCX (f) connector is not available, use a cable or SMA adapter with an MMCX (m) connector to measure from A16J716, the other end of W39. (see Figure 10-19).

9. Press **AMPTD**, **Ref Level**, **20 dBm**, **Freq**, **100 MHz**, **Span**, **1 MHz**, **Peak Search** on the functioning spectrum analyzer.

10. The analyzer marker should read 100 MHz at +10 dBm ± 4 dB as shown in Figure 9-12.

Figure 9-12 100 MHz Reference Input

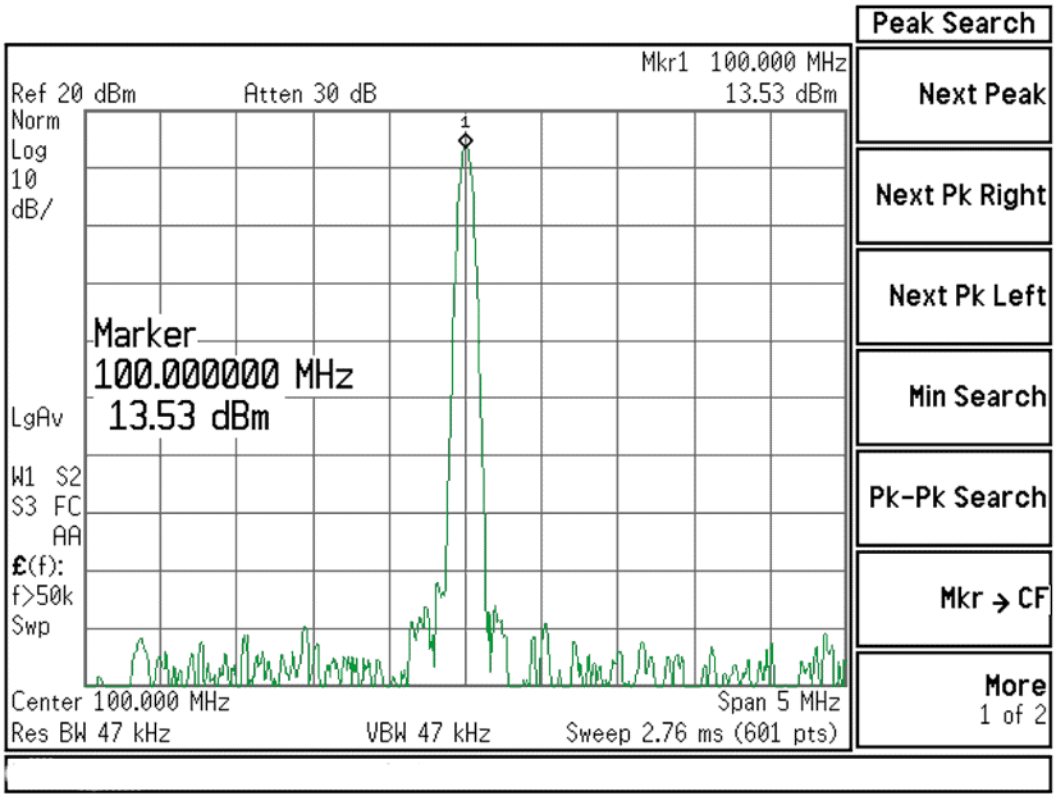

11. If the 100 MHz signal is measuring incorrectly, see See “A16 Reference Troubleshooting” on page 267. in this service guide.

12. If the 22.5 MHz IF, 250 MHz IF (if appropriate) and 100 MHz reference signals measure the correct frequency and amplitude and yet the display is not processing the signal properly, the most probable causes are the A3 Digital IF or the A4 CPU. It is difficult to separate these two assemblies given the architecture of the analyzer. Each assembly will have to be tried to see which one is causing the failure.

10 LO Synthesizer/Reference

What You Will Find in This Chapter

The following information is presented in this chapter:

1. **Theory of operation of the LO Synthesizer and Reference sections.**
2. **Isolating the cause of a hardware problem by verifying the functionality of assemblies in the LO Synthesizer and Reference sections.**

The N9030B can contain either Option EP1, Enhanced Phase Noise performance, or Option EP0, Enhanced Phase Noise, Direct Digital Synthesis (DDS) LO. Both are documented in the following pages.

You need to press **System**, **Show System** to determine which option your instrument has.

The Option EP1 LO Synthesizer and Reference assemblies are different than the Option EP0 DDS LO Synthesizer and Reference assemblies

NOTE

Each of the following sections first describes how the assembly works, then gives information to help you troubleshoot the assembly. Each description explains the purpose of the assembly, describes the main components, and lists external connections to the assembly.

For Option EP1:

A14 LO Synthesizer (EP1) Description on page 235

A14 LO Synthesizer (EP1) Theory of Operation on page 236

A14 LO Synthesizer (EP1) Troubleshooting on page 239

For Option EP0:

A14 DDS LO Synthesizer (EP0) Description on page 251

A14 DDS LO Synthesizer (EP0) Troubleshooting on page 254

Verifying the 7.2 GHz DDS Clock Reference Power and Frequency on page 258

Verifying the 1st LO Power and Frequency on page 259

YTO Output Verification on page 262

For either option:

A16 Reference Description on page 264

A16 Reference Troubleshooting on page 267

A14 LO Synthesizer Option EP1, Enhanced Phase Noise Performance

A14 LO Synthesizer (EP1) Description

Purpose

The LO Synthesizer assembly provides the power and drive to the A20 YTO (YIG Tuned Oscillator). The A20 YTO is used as the 1st Local Oscillator (1st LO) in the A13A1 Front End Assembly for RF conversion. The A13A1 Front End distributes the 1st LO to the various mixers and to the A14 LO Synthesizer for purposes of phase locking the 1st LO. The frequency range of the 1st LO is 3.8 to 8.73 GHz.

The RF input signal mixes with the 1st LO in one of three possible mixers on the A13A1 Front End Assembly. For more detailed description on the Front End Assembly, see Chapter 6, “RF Input Section (RF/Microwave)” in this service guide.

The A14 LO Synthesizer has the following inputs and outputs:

- Power Supply inputs
- Serial Bus input for LO Control
- Sweep input for LO Control
- 4800 MHz input signal from A16 Reference Assembly
- 100 MHz input signal from A16 Reference Assembly
- 1st LO output signal from A13 RF Front End Assembly
- Power and drive signals to the A20 YTO

The input signals to the LO Synthesizer Assembly are the 4800 MHz and 100 MHz reference signals from the A16 Reference Assembly. These signals are used to phase lock the offset loop on the A14 and the 1st LO. On the A16 Reference Assembly, both the 4800 MHz and 100 MHz reference signals are phase locked back to the 10 MHz reference, which is also located on A16.

The quality of the phase lock design that locks the 1st LO has a direct relationship on the overall stability of the analyzer. Users can also provide their own external reference. The frequency accuracy of the user's frequency reference is directly related to the overall frequency accuracy of the signal analyzer.

A14 LO Synthesizer (EP1) Theory of Operation

NOTE Refer to Chapter 15, “Block Diagrams.”

The LO Synthesizer can be operated in either dual-loop or single-loop modes. The dual-loop mode provides lower phase noise but slower tuning speed. The single-loop mode provides for fast tuning. The dual-loop mode is used for narrower spans, where phase noise impacts are the greatest, while single-loop mode is used in the wider spans, where tuning speed is most important.

The analyzer automatically chooses dual-loop mode for spans less than or equal to 10 MHz. This is the “customer span”, that is, the span annotated on the screen and visible to the customer. The LO span, which is the span to which the LO hardware is actually set, will be the customer span divided by N, the harmonic mixing number. The single-loop mode is automatically selected for customer spans wider than 10 MHz.

Single Loop Operation

In single-loop mode, the 100 MHz LO Synth reference signal from A16 is divided by two and the resulting 50 MHz signal is used as the reference input to the main loop phase/frequency detector. The 1st LO from A13A1J5, Synth Out, comes into A14J20 and its power is split two ways; one of the splitter outputs is used for dual-loop mode and the other output is used for single-loop mode.

In single-loop mode, the 1st LO signal is divided by two, yielding a range of 1.9 to 4.36 GHz and this divided signal is then fed to the fractional-N divider. The output of the fractional-N divider feeds the other input to the main loop phase/frequency detector. The output of the phase/frequency detector feeds the loop integrator which then drives the YTO Main and FM Coil Drivers.

There are also two types of single-loop modes; single-loop narrowband and single-loop wideband. The single-loop narrowband mode provides lower phase noise at offsets less than approximately 20 kHz.

Dual Loop Operation

In dual-loop mode, both the 100 MHz LO Synth and 4800 MHz 1st LO Reference signals are used. The 4800 MHz reference goes into a power splitter and one splitter output drives the fractional-N divider. The other output is used to drive a mixer in the Offset Loop synthesizer. The 100 MHz reference is split and one output used to drive a sampler in the Offset Loop synthesizer and the other output is divided by either 3 or 6 to yield a 16.6 or 33.3 MHz reference for the offset loop synthesizer.

The offset loop synthesizer is used to create a signal that is typically 33 to 55 MHz offset from the desired 1st LO frequency. To avoid generating synthesis related spurs, sometimes the offset is from 78 to 88 MHz. The offset loop synthesizer output drives the LO port of a mixer. The 1st LO from the A13A1

Front End drives the RF port of the mixer. The signal at the IF port, which should be between 33 and 55 MHz (or between 78 and 88 MHz), drives the phase/frequency detector.

The fractional-N divider drives the other input of the phase/frequency detector which then feeds the loop integrator which then drives the YTO Main and FM Coil Drivers.

Similar to the single-loop mode, there are two types of dual-loop modes; dual-loop narrowband and dual-loop wideband. The dual-loop narrowband mode provides lower phase noise at offsets greater than approximately 160 kHz.

To maintain the best span accuracy, dual loop spans between 2.5 MHz and 10 MHz are actually comprised of two to four individual spans that are then “cut-and-pasted” together to yield the desired span.

Manual Selection of Single versus Dual Loop Operation

The table below shows how the selections of Phase Noise Optimization, sweep type, and span affects the selection of single-loop versus dual-loop operation. Note that this table assumes the RBW is auto coupled. If the span is <= 10 MHz (or zero span) and the RBW is manually set to >1.9 MHz, the synthesizer will be set to single-loop operation.

Table 10-1

Sweep Type	**Span (with autocoupled RBW)**	**Phase Noise Optimization Setting**		
		Best Close-In Phase Noise (offset < 140 kHz)	**Best Wide-Offset Phase Noise (offset > 160 kHz)**	**Fast Tuning**
FFT	All	Dual-Loop, Wideband[a]	Dual-Loop, Narrowband[a]	Single-Loop, Wideband
Swept	0 Hz			
	≤ 10 MHz			
	>10 to ≤ 100 MHz	Single-Loop, Narrowband		
	> 100 MHz	Single-Loop, Wideband		

a. Single-Loop, Narrowband if RBW is manually set to > 1.9 MHz

Refer to the Phase Noise Optimization topic in the Spectrum Analyzer Mode User's and Programmer's Reference for details on the autocoupled selections.

Brief Description of the Major Blocks:

- The Field Programmable Gate Array (FPGA) LO Controller has the capability to pretune the A20 YTO, detect unlocks, and control the fractional-N divider, main loop, and offset loop.
- The Main Loop contains the fractional-N divider, phase/frequency detector, loop integrator, YTO Main and FM Coil drivers, the main loop mixer, and switches for selecting either single-loop or dual-loop operation. The input to the fractional-N divider is either the 4800 MHz reference (dual-loop) or the 1st LO signal divided by 2 (single-loop). The input to the phase frequency detector is either the 100 MHz reference divided by 2 (single-loop) or the IF of the main loop mixer (dual-loop).
- The Offset Loop is a very-low phase noise phase locked loop with coarse frequency settability. It is only used in dual-loop operation. Its output frequency is set to be typically 30 to 53 MHz above the desired 1st LO frequency, but the difference will sometimes be 78 to 88 MHz to avoid causing spurs The output of the offset loop is applied to the LO input of the main loop mixer, where it is mixed with the output of the A20 YTO.
- The reference frequency distribution consists of power splitters for each of the two reference signals (4800 MHz and 100 MHz) and a programmable divider for one splitter output of the 100 MHz reference signal. The programmable divider can be set to 2 to generate a 50 MHz reference for use in single-loop operation or to 3 or 6 to generate a 16.6 or 33.3 MHz reference for dual-loop operation.

A14 LO Synthesizer (EP1) Troubleshooting

With the instrument off, remove the outer cover and the top brace. See Chapter 18, "Assembly Replacement Procedures," in this manual. Then turn on the instrument and wait for it to complete the boot up process.

There are 5 processes to perform, which will verify the LO Synthesizer assembly, as well as signals from the Reference and YTO assemblies, are functioning properly:

1. Press **System**, **Alignments**, **Align Now**, **All**. If the alignment functions correctly with no error messages on the analyzer display, most of the synthesizer section is working properly. See Chapter 4, "Internal Alignments," for information on any failing alignments.
2. Verify the status LEDs on the A14 LO Synthesizer are functioning correctly. See "Verifying Status LEDs".
3. Measure 4800 MHz 1st LO Reference power and frequency from the A16 Reference. See "Verifying the 4800 MHz 1st LO Reference Power and Frequency".
4. Measure 100 MHz LO Synth Reference power and frequency from the A16 Reference. "Verifying the 100 MHz LO Synth Reference Power and Frequency".
5. Measure 1st LO output power and frequency from the A20 YTO. See "Verifying the 1st LO Power and Frequency".

These items can be checked with a functioning, external spectrum analyzer using cables and connectors that function well up to 10 GHz. A directional coupler, such as the 87300B, is also required for measuring the 1st LO output frequency and power. A power splitter, such as the 11667B, can be used if a directional coupler cannot be located.

Verifying Status LEDs

1. Press **FREQ**, **50 MHz**, **Span**, **Zero Span**.
2. Refer to Figure 10-1 below for the location of the A14 LO Synthesizer Status LEDs near the top of the board next to J9.
3. Perform a quick visual assessment of the LEDs' status. LEDs DS1 (yellow), DS2 (orange), and DS3 (red) should all be off. DS4 (green) should be on.

   The definition of each LED is as follows:

   - DS1 (yellow) When lit, indicates the analyzer is sweeping.
   - DS2 (orange) When lit, indicates that the Offset Loop integrator exceeds its nominal range and is thus unlocked (applicable only in dual-loop mode).

- DS3 (red) When lit, means the Main Loop Cycle Slipped Detector has detected a cycle slipped condition and the main loop is thus unlocked. It is normal for DS3 to flash between sweeps when the Main Loop is relocking. This can also occur during multiband sweeps. For example:
  - sweeps which cross from one harmonic band to another such as from 2 GHz to 8 GHz
  - dual-loop spans between 2.5 MHz and 10 MHz
- DS4 (green) When lit, indicates that the FPGA has been configured. If DS4 (green) is off, the instrument thinks the FPGA is not configured.

If the LEDs are not functioning as expected, but the signals from the A16 Reference and A20 YTO are verified to be correct in the following procedures, suspect the A14 LO Synthesizer assembly.

Figure 10-1 A14 LO Synthesizer Assembly Status LED Locations

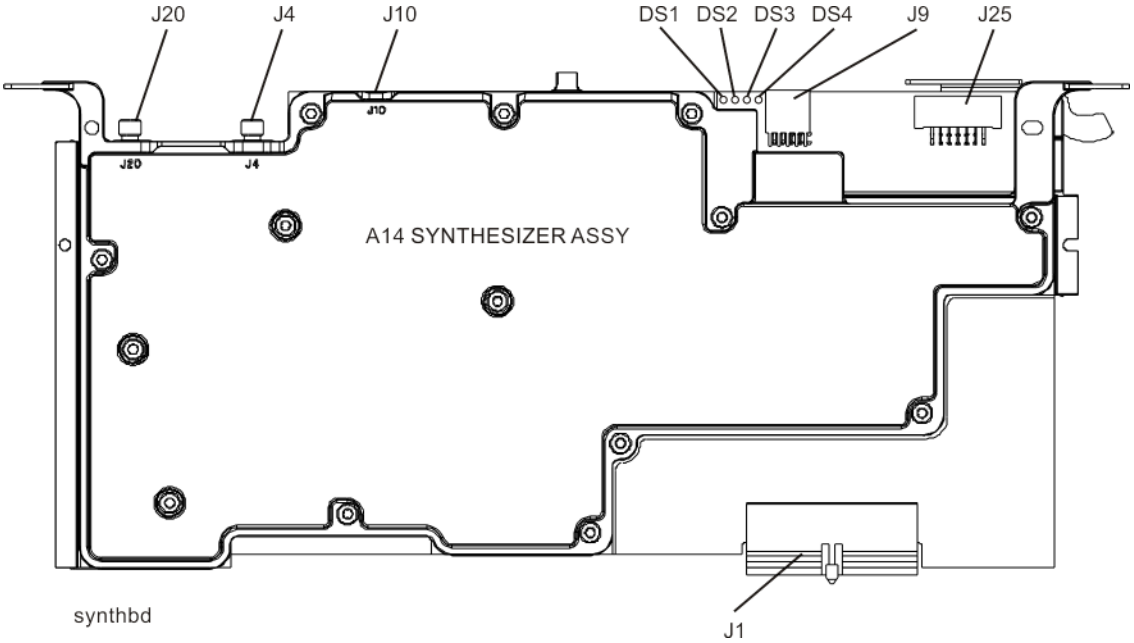

Verifying the 4800 MHz 1st LO Reference Power and Frequency

1. Press Mode Preset then turn the internal alignments off by pressing **System**, **Alignments**, **Auto Align**, **Auto Align Off**.
2. Press **FREQ**, **50 MHz**, **Span**, **Zero Span**, **Meas Setup**, **PhNoise Opt**, **Best Close in PNoise**. If Phase Noise Optimization is not set to either Best Close in PNoise or Best Wide Offset PNoise, the 4800 MHz 1st LO Reference signal will be approximately 20 dB lower than required for proper dual-loop operation.
3. Disconnect W31 from A14J4 (see Figure 10-2).

NOTE DS3 (red LED) will blink between sweeps when cable W31 is removed. This is normal.

Figure 10-2 Cable and LED Locations

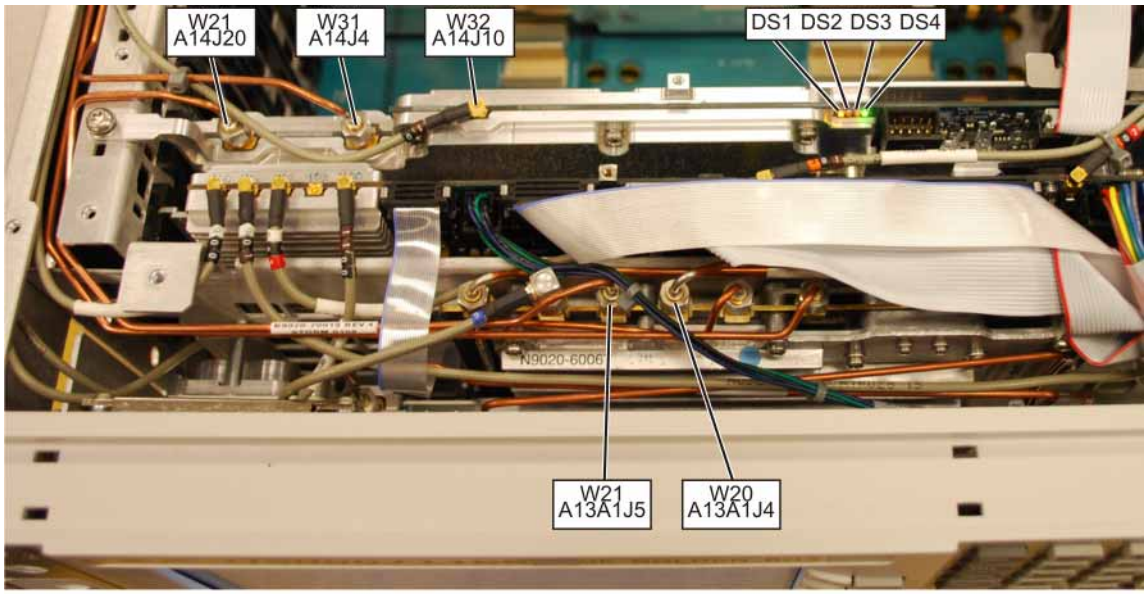

synthbd_cables

4. Connect the end of W31 to the RF input of the functioning spectrum analyzer.
5. Set the functioning spectrum analyzer to a center frequency of 4800 MHz and a span of 5 MHz. Set the reference level to +10 dBm.

6. Press **Peak Search** on the functioning spectrum analyzer. The analyzer marker should read 4800 MHz at +3 dBm ± 3 dB as shown in Figure 10-3.

Figure 10-3 4800 MHz Wide Span

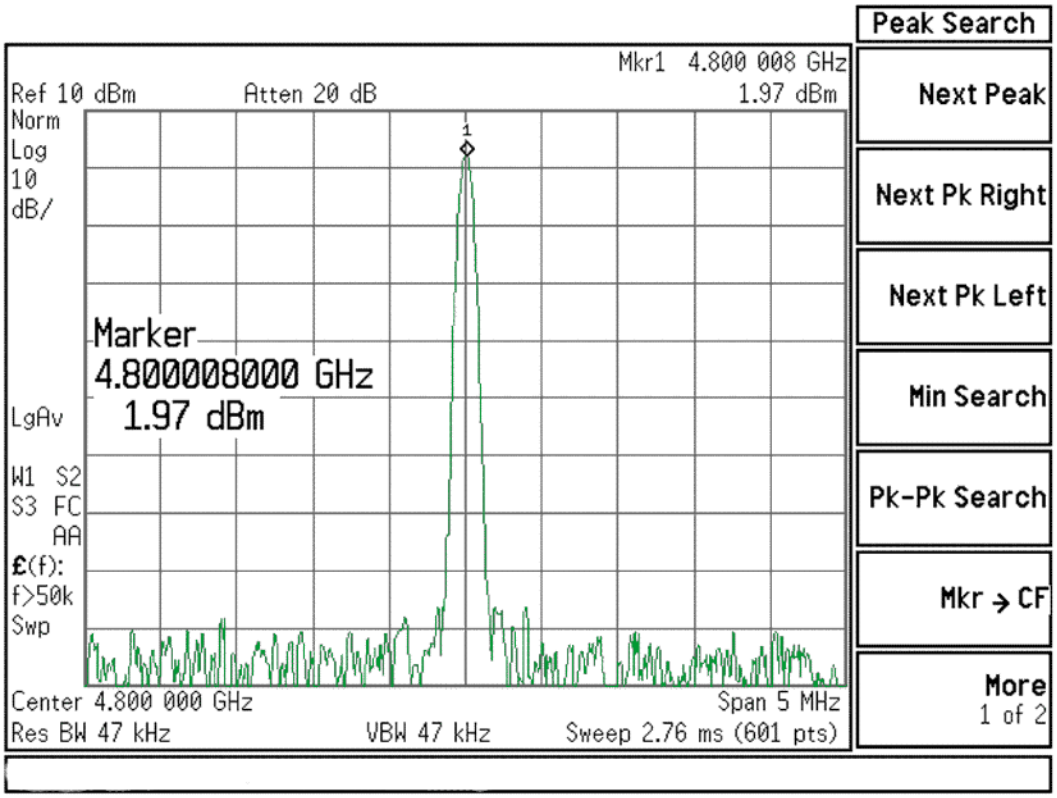

7. Verify the 4800 MHz signal from the A16 Reference Assembly is stable by pressing **Span**, **50 kHz**, **BW**, **1 kHz** on the functioning spectrum analyzer. The signal on the functioning spectrum analyzer should be very stable both in frequency and power as shown in Figure 10-4.

   Is the measured 4800 MHz signal power level and frequency correct?

   If yes:

   Reconnect W31 to A14J4 and go to the next troubleshooting procedure.

   If no:

   Suspect the A16 Reference Assembly. See the "A16 Reference Troubleshooting" section later in this chapter.

Figure 10-4 4800 MHz Narrow Span

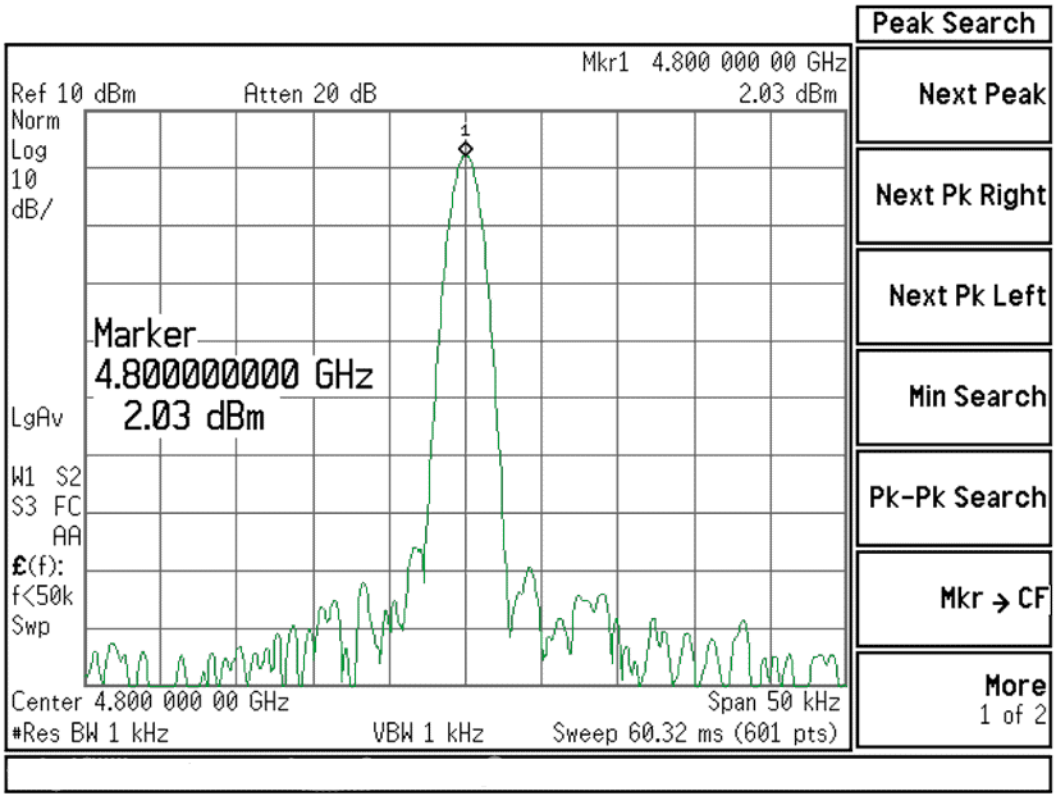

Verifying the 100 MHz LO Synth Reference Power and Frequency

1. Press **Mode Preset** then turn the internal alignments off by pressing **System**, **Alignments**, **Auto Align**, **Auto Align Off**.
2. Press **FREQ**, **50 MHz**, **Span**, **Zero Span**.
3. Disconnect W32 from A14J10 (see Figure 10-5).

NOTE DS3 (red LED) will illuminate when cable W32 is removed. This is normal.

Figure 10-5 W32 Location

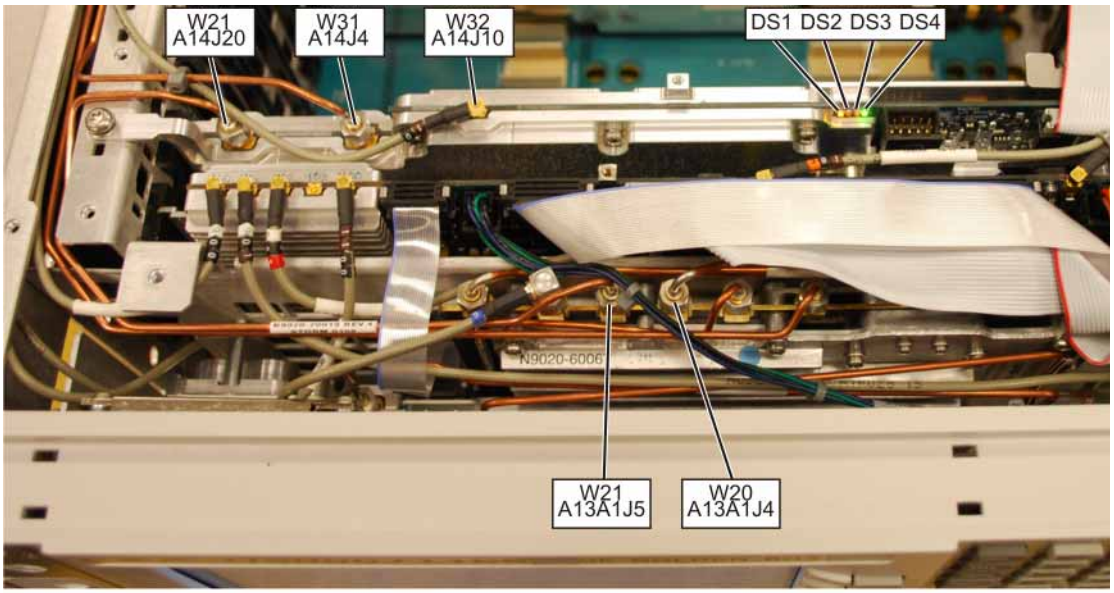

synthbd_cables

4. Connect the end of W32 to the RF input of the functioning spectrum analyzer.
5. Set the functioning spectrum analyzer to a center frequency of 100 MHz and a span of 5 MHz. Set the reference level to +20 dBm.

6. Press **Peak Search** on the functioning spectrum analyzer. The analyzer marker should read 100 MHz at +13 dBm ±3 dB as shown in Figure 10-6.

Figure 10-6 100 MHz Wide Span

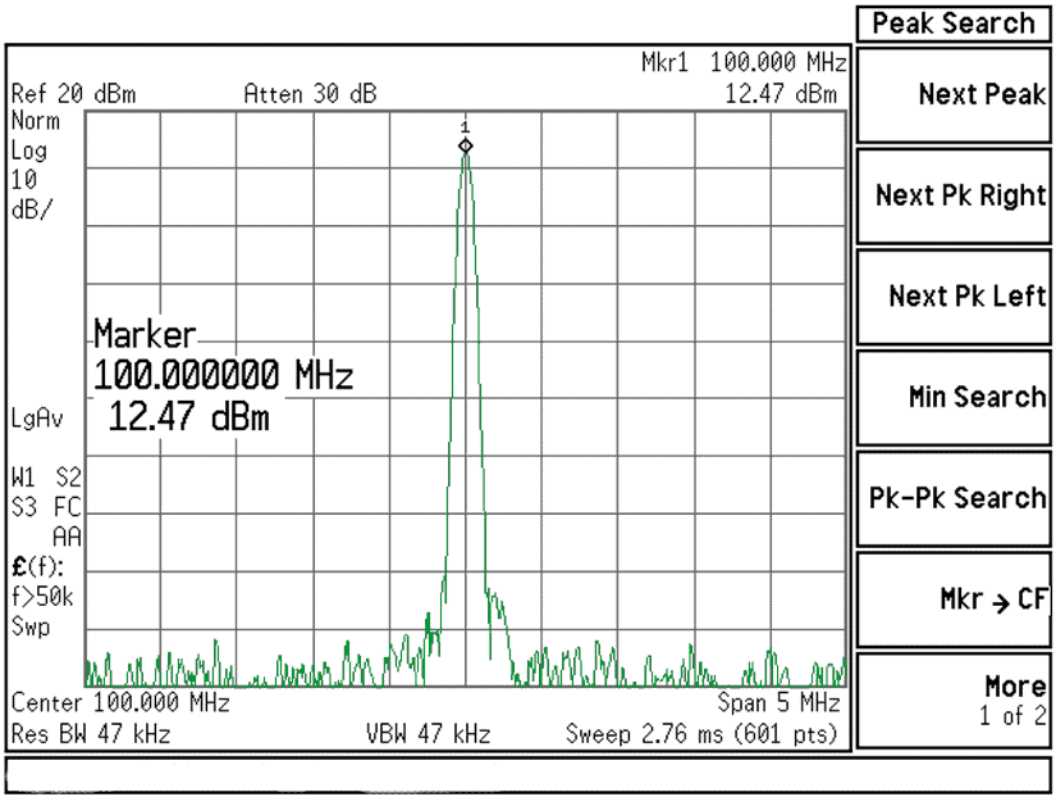

7. Verify the 100 MHz signal from the A16 Reference Assembly is stable by pressing **Span**, **50 kHz**, **BW**, **1 kHz** on the functioning spectrum analyzer. The signal on the functioning spectrum analyzer should be very stable both in frequency and power as shown in Figure 10-4.

   Is the measured 100 MHz signal power level and frequency correct?

   If yes:

   Reconnect W31 to A14J4 and go to the next troubleshooting procedure.

   If no:

   Suspect the A16 Reference Assembly. See the "A16 Reference Troubleshooting" section later in this chapter.

Figure 10-7 100 MHz Narrow Span

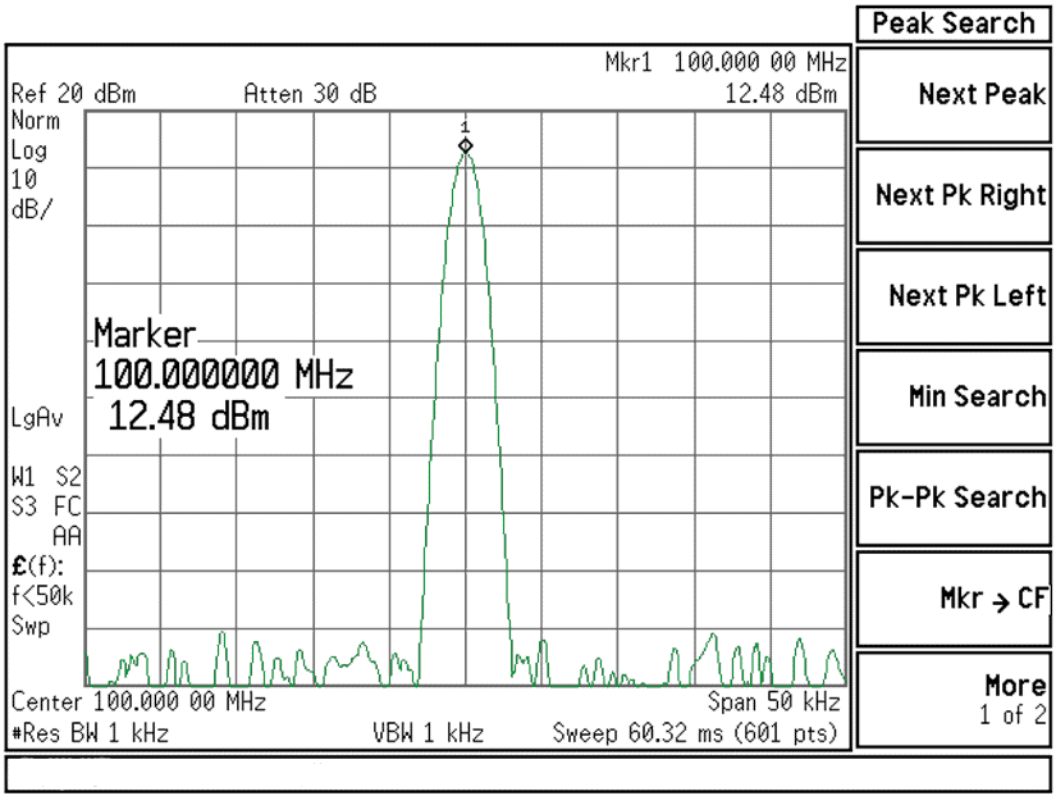

Verifying the 1st LO Power and Frequency

1. Press **Mode Preset** then turn the internal alignments off by pressing **System**, **Alignments**, **Auto Align**, **Auto Align Off**.
2. Press **FREQ**, **50 MHz**, **Span**, **Zero Span**.
3. Refer to Figure 10-5. Remove W21 from both A13A1J5 and A14J20.
4. Disconnect W20 from A13A1J4.
5. Refer to Figure 10-5. Connect the input of a directional coupler to the end of W20 that was disconnected from A13A1J4, using a 90° SMA (m-f) elbow. Connect a short SMA cable from one output of the directional coupler to A14J20. Connect another cable from the coupled output of the directional coupler to the input of the functioning spectrum analyzer. These connections bypass the LO distribution amplifiers on the A13A1 RF Front End Assembly.

Figure 10-8 Directional Coupler Connection

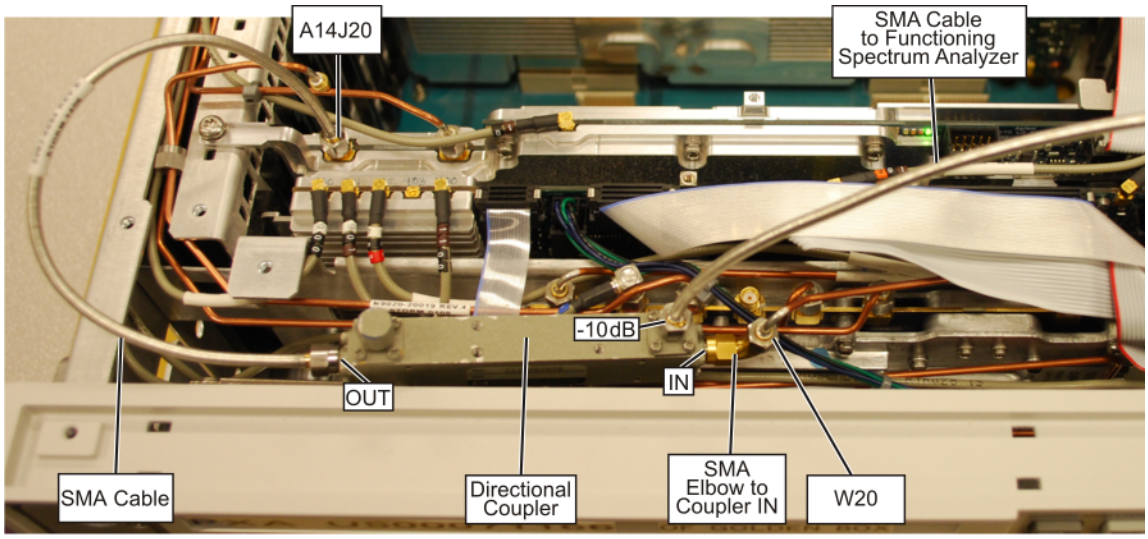

synthbd_ts

6. Set the functioning spectrum analyzer to a center frequency of 5172.5 MHz and a span of 5 MHz. Set the reference level to +10 dBm and reference level offset to the coupling factor of the directional coupler being used (Keysight 87300B is -10 dB).
7. Press **Peak Search** on the functioning spectrum analyzer. If the functioning spectrum analyzer has a preselector peak or preselector centering function, perform that operation to guarantee that the preselector is optimized for the measurement.

8. The analyzer marker should read 5172.5 MHz at 0 dBm ± 4 dB as shown in Figure 10-9.

Figure 10-9 5.1725 GHz 1st LO Measurement

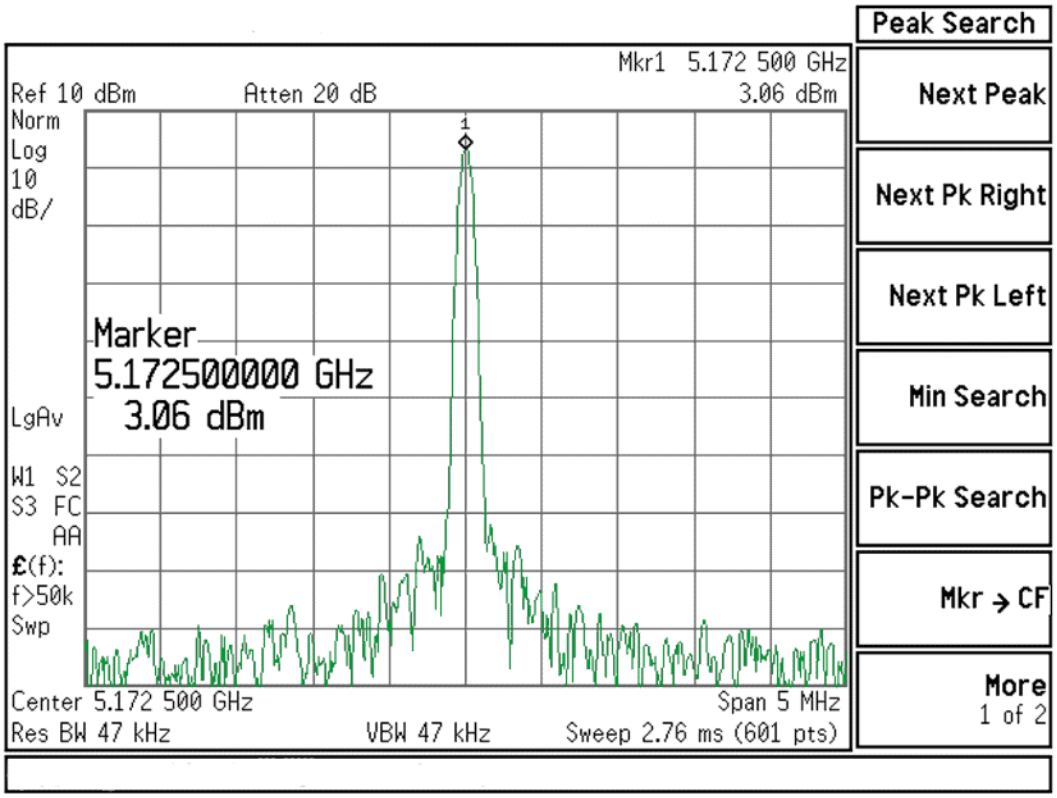

NOTE Due to the nominal 10 dB coupling factor of the directional coupler, the actual power at the YTO output will be approximately 10 dB higher than the power level measured by the functioning spectrum analyzer.

NOTE If the 5172.5 MHz signal is not measuring the correct power level but the frequency is correct, the A20 YTO is the most probable cause. If the power level is correct, but the frequency is not correct, the A14 LO Synthesizer is the most probable cause.

9. Continue changing the center frequency of the PXA as per Table 10-2 and measure the LO output expected frequency and power using the functioning spectrum analyzer. Frequencies above 3.6 GHz apply only to analyzers with Option 508, 513, or 526.

10. If measurements made with the connections above do not indicate a failure, but failures (i.e. 1st LO unlocks) do occur when the cables are connected normally (i.e. with the A20 YTO output feeding the A13A1 RF Front End Assembly and A13A1 feeding the A14 LO Synthesizer), the most probable cause is the LO distribution section on A13A1.

Table 10-2 1st LO Frequency and Power Level Measurements

PXA Signal Analyzer Center Frequency (GHz)	Expected LO Frequency (GHz) at Directional Coupler Output	Expected LO Power at Directional Coupler Output	Equivalent LO Power) at YTO Output
0.050	5.1725	0 dBm ± 4 dB	+10 dBm ± 4 dB
1.8	6.9225	0 dBm ± 4 dB	+10 dBm ± 4 dB
3.5	8.6225	0 dBm ± 4 dB	+10 dBm ± 4 dB
Check the following frequencies on analyzers with Option 508, 513, or 526			
3.7	4.0225	0 dBm ± 4 dB	+10 dBm ± 4 dB
4.3	4.6225	0 dBm ± 4 dB	+10 dBm ± 4 dB
5.5	5.8225	0 dBm ± 4 dB	+10 dBm ± 4 dB
7.0	7.3225	0 dBm ± 4 dB	+10 dBm ± 4 dB
8.3	8.6225	0 dBm ± 4 dB	+10 dBm ± 4 dB

Figure 10-10 5.1725 GHz 1st LO Measurement

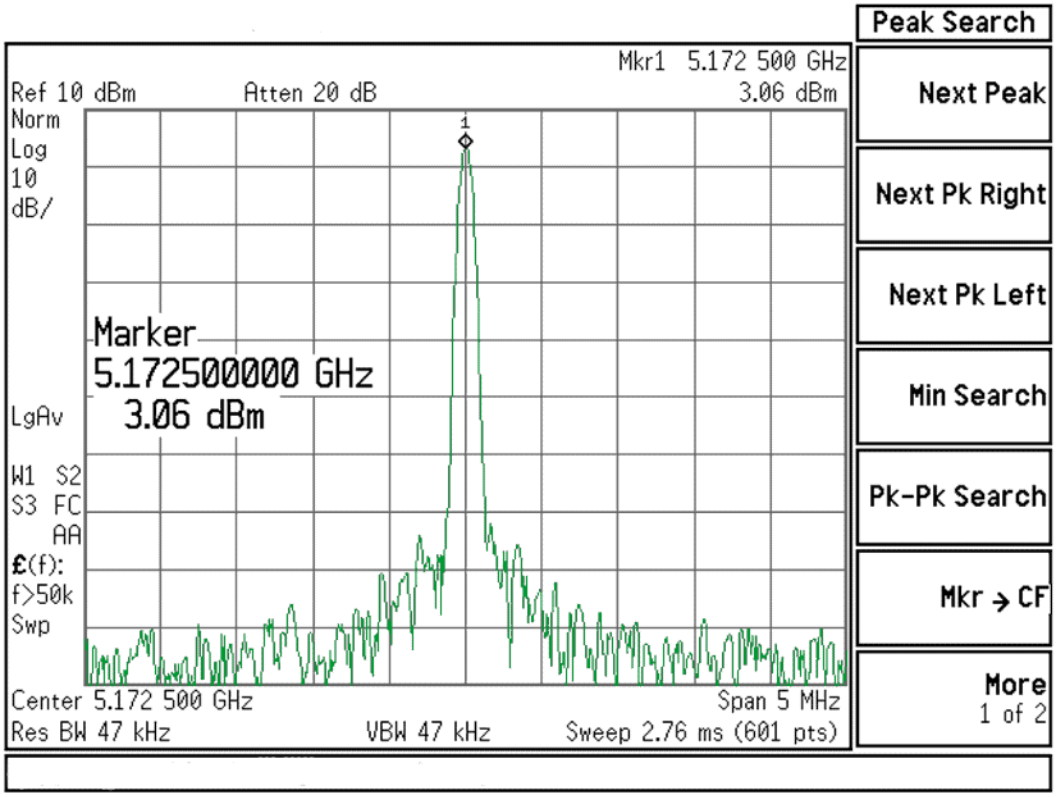

Figure 10-11 4.6225 GHz 1st LO Measurement

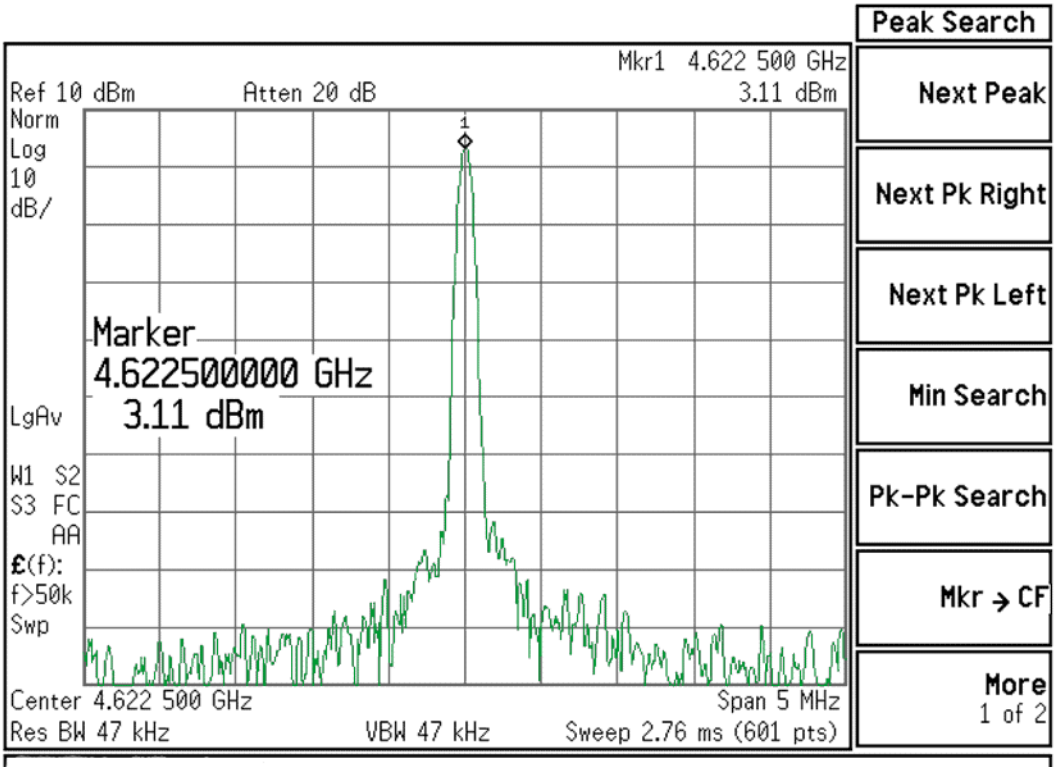

Figure 10-12 7.3225 GHz 1st LO Measurement

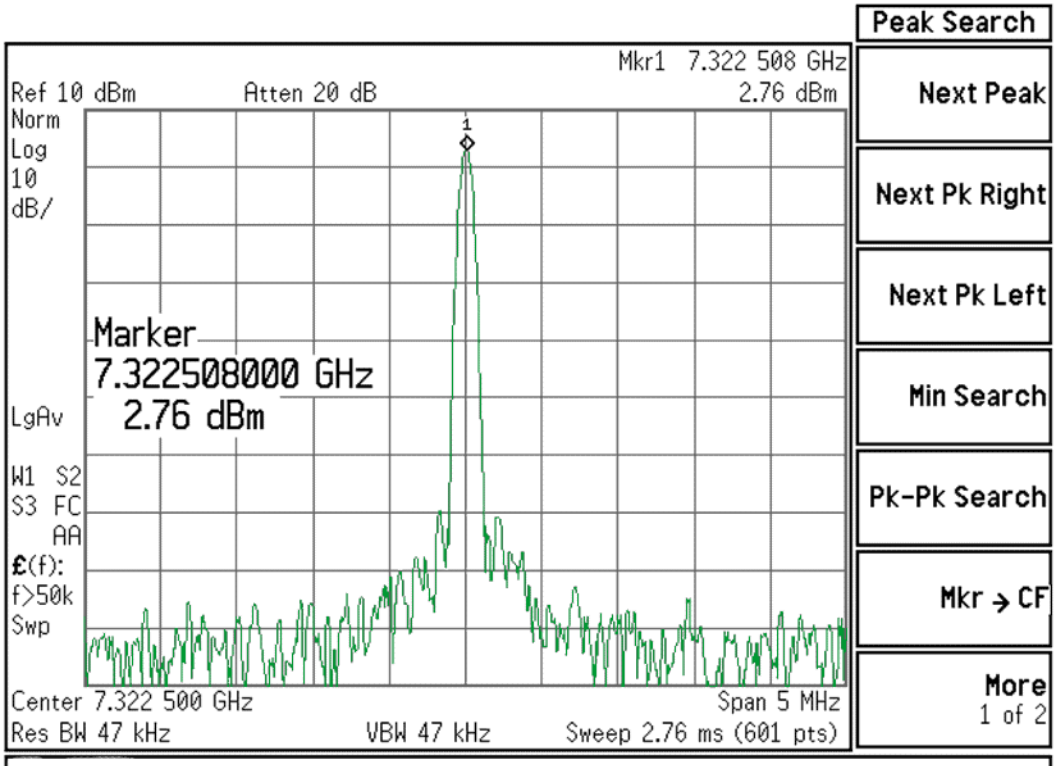

A14 DDS LO Synthesizer Option EP0, Enhanced Phase Noise, DDS LO

A14 DDS LO Synthesizer (EP0) Description

The A14 DDS LO Synthesizer provides the first LO signal that the instrument uses to downconvert the RF input signal. It also provides the bias and tune voltage for the A20 Yig Tuned Oscillator. A Direct Digital Synthesis (DDS) signal is generated for two modes of operation; either it is used to phase lock the LO signal from the A20 YIG Tuned Oscillator or used as the LO signal itself. The instrument settings determine which LO source to use.

The DDS signal is generated by a DAC on a second component called the LO DDS Reference (see Figure 10-13), which will identify itself separately from the LO DDS Synthesizer on the Hardware Information screen.

NOTE **A replacement assembly includes both of the components, but not the FL2 filter or cables.**

The A20 YTO output of 3.5 to 9.0 GHz is applied to J2 through cable W83. When the DDS output is used as the LO signal source, the YTO is turned off.

A 7.2 GHz clock signal is applied from the A16 Reference assembly, at A16J703, to J35002 on the DDS Reference. This signal passes through cable W82, 7.2 GHz bandpass filter FL2, and W81.

The LO output from the synthesizer is at J1, and is connected to the A13 Front End assembly at A13J4 with cable W73, providing the first LO signal for the analyzer.

W23 ribbon cable, at J8, provides YTO control, power supplies, tune current, and Main coil filter control to the A20 YTO assembly.

Figure 10-13 Synthesizer Assembly Cables and Components

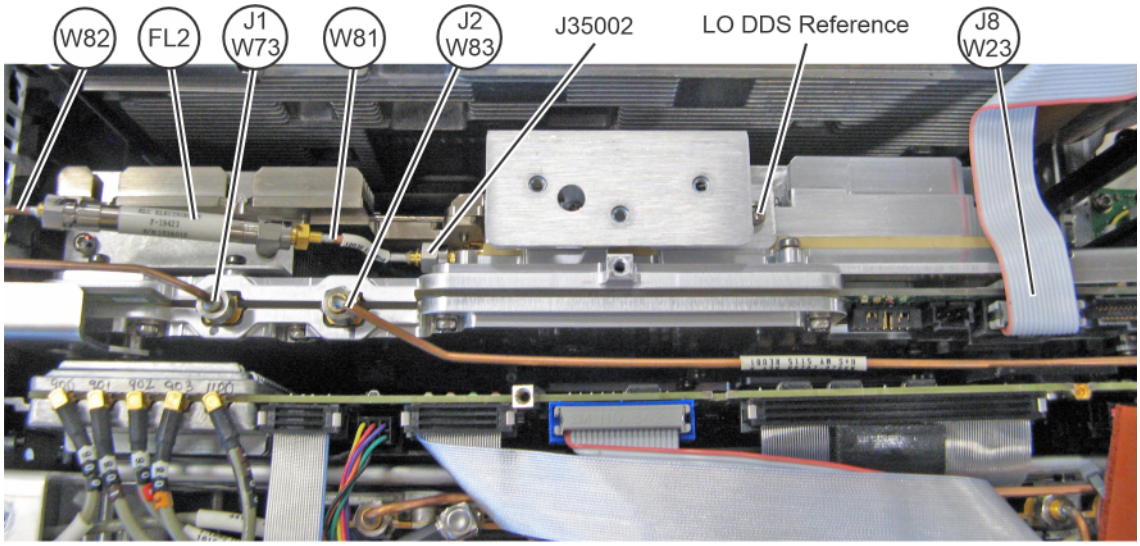

synthbd_cables_pxa_EP0

Modes of Operation and PNO

When the A20 Yig Tuned Oscillator output is used as the LO source, the A14A1 DDS LO Reference output is used as the reference for the phase lock loops. The phase lock loop settings can also be adjusted to optimize the synthesizer performance for the measurement being made. When the DDS LO Reference output is used, the A20 Yig Tuned Oscillator is turned off. The DDS output is a Direct Digital Synthesis signal generated by a DAC on the A14A1 assembly.

Phase Noise Optimization is the main setting that determines which LO source and loop bandwidth to use. The instrument settings to enable the phase lock loop modes are typically set automatically as a function of the instrument span, or can be manually selected by pressing **Meas Setup**, **Advanced**, **Phase Noise Optimization**. The selections and effects for this setting are:

Best Close-In Phase Noise [offset < 600 kHz]

Best phase noise for offsets <600 kHz

Must be in a span of 100 MHz or less

A14A1 DDS LO output is used

Slightly higher spurs

Balance Noise and Spurs [offset < 600 kHz]

Auto coupled in spans ≤ 4.2 MHz

A14A1 DDS LO output is used for spans <119 kHz

A20 Yig Tuned Oscillator output is used for spans ≥119 kHz

Spurs are minimized

Best Spurs [offset < 600 kHz]

Phase noise performance is not as good <600 kHz

A20 Yig Tuned Oscillator output is used

Best Wide-Offset Phase Noise [offset > 800 kHz]

Best phase noise for offsets >800 kHz

Auto coupled in spans of 4.21 to 83.1 MHz

A16 Reference will narrow its 2.4 GHz phase lock loop bandwidth

A20 Yig Tuned Oscillator output is used

Fast Tuning

Wide loop bandwidth for wide capture range

Spur suppression is as good as the "Best Spurs" setting

Auto Coupled in spans ≥ 83.2 MHz

A20 Yig Tuned Oscillator output is used

A14 DDS LO Synthesizer (EP0) Troubleshooting

There are 5 processes to perform, which will verify the DDS LO Synthesizer assembly, as well as signals from the Reference and YTO assemblies, are functioning properly:

1. Verify that the assembly is being recognized. See "Functional Verification."
2. Run internal alignments. See "Verifying Self Alignments".
3. Inspect the assembly status LEDs. See "Verifying Status LEDs".
4. Measure 7200 MHz Reference signal power and frequency from the A16 Reference. See "Verifying the 7.2 GHz DDS Clock Reference Power and Frequency".
5. Measure 1st LO output power and frequency from the A14 DDS LO Synthesizer and A20 YTO. See ""Verifying the 1st LO Power and Frequency".

Functional Verification

Before proceeding to verify or troubleshoot the operation of the A14 DDS LO Synthesizer, verify that it is being recognized by the instrument by pressing **System**, **Show Hardware** and verify that there is a **LO DDS Synthesizer** and a **LO DDS Reference** in the list of hardware assemblies, as seen in Figure 10-3 If either one is not listed, the cause for this will need to be determined before any other troubleshooting is performed. The most probable causes for this type of a problem would be one of the following:

– FPGA Code on the assembly is corrupt

  Solution: See the "Instrument Software Overview" section in Chapter 21, "Instrument Software," to reload the FPGA code.

– An instrument power supply voltage is not operating properly

  Solution: See the "Power Supply Verification" section in Chapter 5, "First-Look Troubleshooting," to verify that all the instrument power supplies are on.

– A14 DDS LO Synthesizer assembly is defective

  Solution: Replace the A14 DDS LO Synthesizer assembly

NOTE

Before replacing any assembly due to a failure during the functional verification, be sure to verify that the instrument power supply is delivering all the required voltage levels. To do this, see the "Power Supply Verification" section in Chapter 5, "First-Look Troubleshooting."

Verifying Self Alignments

Press **System**, **Alignments**, **Align Now**, **All**. If the self alignments function correctly with no error messages on the analyzer display, most of the synthesizer section is working properly. If the self alignments fail, refer to Table 10-3 alignments related to the A14 DDS LO Synthesizer.

Table 10-3 Self Alignments (Power-up and Periodic)

Alignment Name	
LO Serial Link Test (not displayed on AlignmentHistory screen)	– Performed one time at Power-up. – Checks intra-board communication between the A14 Synthesizer and the A16 DDS Reference. – Prevents normal operation of DDS Reference if thermometers cannot be read. – Upon link test failure, power supplies on DDS Reference disabled and details written to Windows Event log. Event log at: **Control Panel**, **System and Security**, **Administrative Tools**, **View Event Logs**, **Windows Logs**, **System**.
DDSSynthFastPortSkew Training alignment	– Performed one time at Power-up. – This alignment compensates for propagation lead/lag (skew) of the high speed parallel data bus inputs to the DDS DAC from the FPGA of the DDS Reference board. – Compensates for delays in FPGA I/O ports, DAC data inputs, and board layout. – Timing is relative to the data bus clock.
DDSSynthYTO Pretune DAC alignment	– Aligned at Power-up and periodically during instrument operation. – This alignment computes linear-slope, offset and sensitivity constants required to tune the YIG Tuned Oscillator (YTO) over the usable range of 3500-9400 MHz.

Verifying Status LEDs

With the instrument off, remove the outer cover and the top brace. See Chapter 18, "Assembly Replacement Procedures," in this manual. Then turn on the instrument and wait for it to complete the boot up process. Use this section to perform a quick visual assessment of functionality.

There are four status LEDs on the A14 DDS LO Synthesizer assembly. A list of each LED can be seen in Table 10-4, and the location of each can be seen in Figure 10-14 near the top of the board next to J9.

Table 10-4 A14 DDS LO Synthesizer Status LEDs

LED	Description	Color
DS1	Sweep Status	Yellow
DS2	LO Ready	Orange
DS3	LO Unlock	Red
DS4	FPGAs Configured	Green

Figure 10-14 A14 DDS LO Synthesizer Status LED Locations

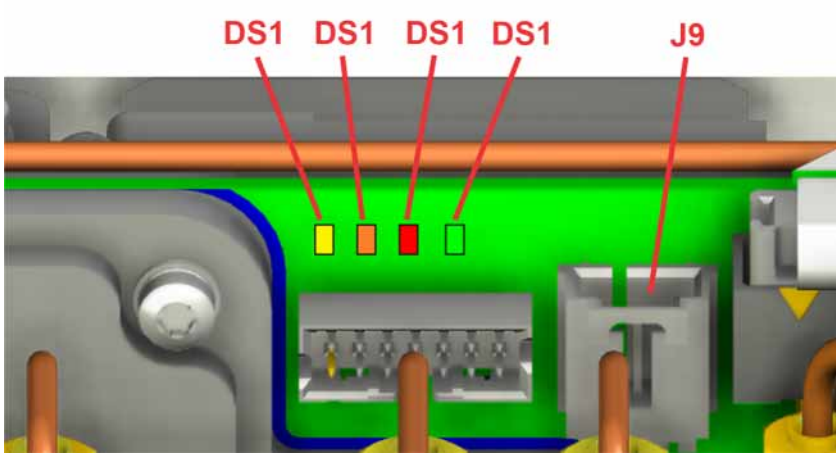

DS1 - Yellow

This will be on whenever the synthesizer is being tuned. This can be during a measurement or a retrace. When the instrument is preset in the spectrum analyzer mode it will be flashing on and off as the instrument sweeps. It will mostly be on when DS2 is off.

In Zero Span, this LED should be off.

DS2 - Orange

If the synthesizer is not ready to sweep or tune this will be on. When the instrument is preset in the spectrum analyzer mode it will be flashing on and off as the instrument sweeps. It will mostly be on when DS1 is off.

In Zero Span, this LED should be off.

DS3 - Red

Whenever the A20 Yig Tuned Oscillator is unlocked this LED will be on. It will also be on briefly whenever the instrument sweeps across an LO band break and during retrace. If the instrument is in a narrow span with a very fast sweeptime it will appear to be on constantly, while it is actually switching on and off at such a high rate that it just appears that way. When the instrument is preset in the spectrum analyzer mode it will be flashing on and off as the instrument sweeps.

If the Phase Noise Optimization is set to Best Close-In Phase Noise this LED should never be on, as the A20 Yig Tuned Oscillator will be turned off.

In Zero Span, this LED should be off.

DS4 - Green

Once the FPGAs on the A14 DDS LO Synthesizer have been initiated, DS4 should always be on. If it does not come on, the assembly will not be working correctly and may not be identified by the instrument. If this is the case, see the introductory portion under the "Functional Verification" heading in this section to verify that the assembly is being identified by the instrument and follow the instructions found there if it is not.

Debug Mode

If the A14 DDS LO Synthesizer has a problem with one of its reference signals, LEDs DS1, DS2, and DS3 will go into debug mode. They will flash to indicate what problem exists, as seen in Table 10-5.

Table 10-5 A14 DDS LO Synthesizer LED Debug Mode

Flashes	DS1 - Yellow	DS2 - Orange	DS3 - Red
1	DDS Ref 10 MHz Error	DDS Synth 10 MHz Error	DDS Synth 50 MHz Error
2	DDS Ref 100 MHz Error	DDS Ref Thermal Alert	DDS Ref Thermal Shut-Down
3	DDS Ref 300 MHz Error	--	--

DDS Ref 10 MHz clock comes from the DDS Synth.

DDS Ref 100 MHz clock is derived by multiplying the 10 MHz clock times 10 on the DDS Ref.

DDS Ref 300 MHz FPGA clock comes from dividing the 7.2 GHz reference by 24 on the DDS Ref.

DDS Synth 10 MHz clock comes from the motherboard.

DDS Synth 50 MHz clock comes from multiplying the 10 MHz clock times 5 on the DDS Synth.

Verifying the 7.2 GHz DDS Clock Reference Power and Frequency

This procedure measures the 7.2 GHz reference signal at J703 of the A16 Reference assembly. There is a very slight chance the 7.2 GHz filter or semi-rigid cables connecting the filter to the A14 Synthesizer J35002 port are faulty, however the A16J703 output port is an easy location to monitor the signal.

Spectrum analyzer under test settings:

Instrument **Preset**

System, **Alignments**, **Auto Align**, **Auto Align Off**.

Center Frequency: 3.7 GHz

Span: Zero Hz

Measuring spectrum analyzer settings:

Attenuation: 20 dB

Reference Level: 10 dBm

Center Frequency: 7.2 GHz

Span: 50 kHz

RBW: 470 Hz

1. Connect an external spectrum analyzer to A16 Reference assembly J703.
2. Refer to Figure 10-15. Press **Peak Search** on the measuring SA and the signal appears as shown.

Figure 10-15 Measuring Spectrum Analyzer, 7.2 GHz

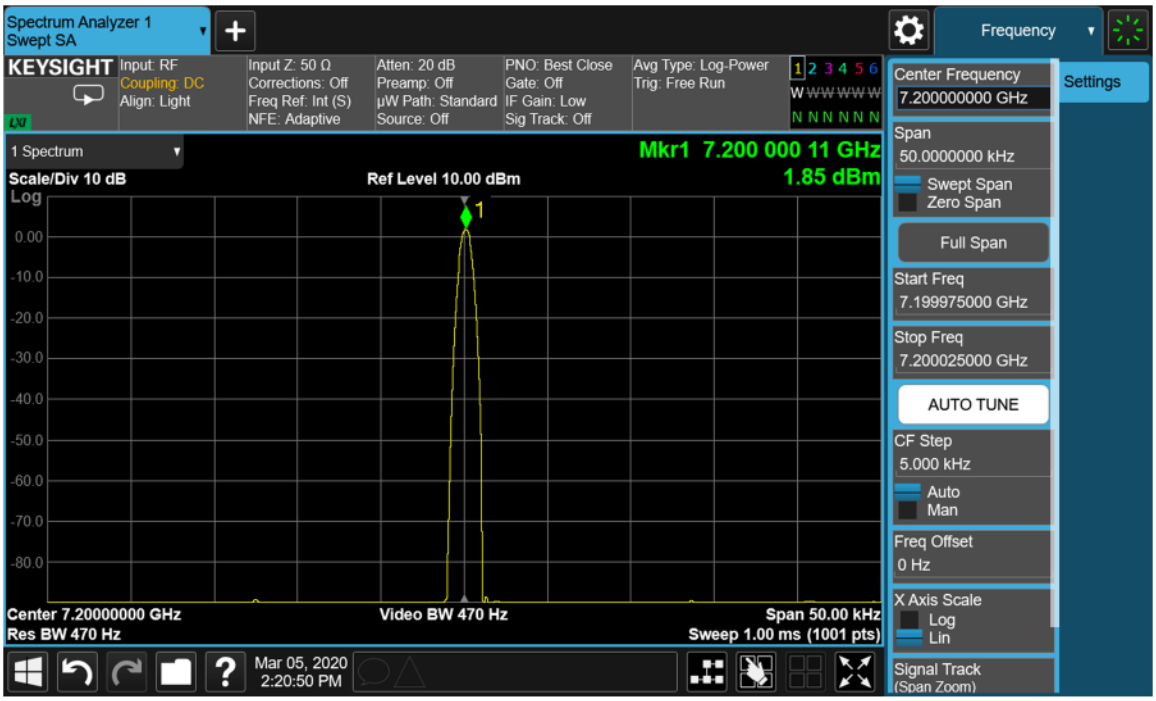

3. The measured power at 7.2 GHz should be around 1.8 dBm. The instrument under test will show an LO Unlock which is expected since the A14 Synthesizer is not receiving the 7.2 GHz reference signal.
4. To clear the LO Unlock, restart the application after reconnecting the rigid cable.

Verifying the 1st LO Power and Frequency

Synthesizer Output Verification

This procedure measures the LO output power and frequency on J1 port of the Synthesizer assembly. The 1st LO is sourced from the A20 YTO, which will need to be measured after.

Spectrum analyzer under test settings:

Instrument **Preset**

System, **Alignments**, **Auto Align**, **Auto Align Off**

Center Frequency: 3.61 GHz

Span: Zero Hz

Measuring spectrum analyzer settings:

Attenuation: 36 dB

Reference Level: 26 dBm

Center Frequency: 3.932500 GHz

Span: 20 kHz

RBW: 1 kHz

1. Connect an external spectrum analyzer with a frequency range above 10 GHz to A14 Synthesizer J1. Use a good quality low loss SMA cable since the frequencies being measured are in the 4-9 GHz range.
2. Refer to Figure 10-16. Press **Peak Search** on the measuring SA and the signal appears as shown.

Figure 10-16 Measuring Spectrum Analyzer, 3.9325 GHz

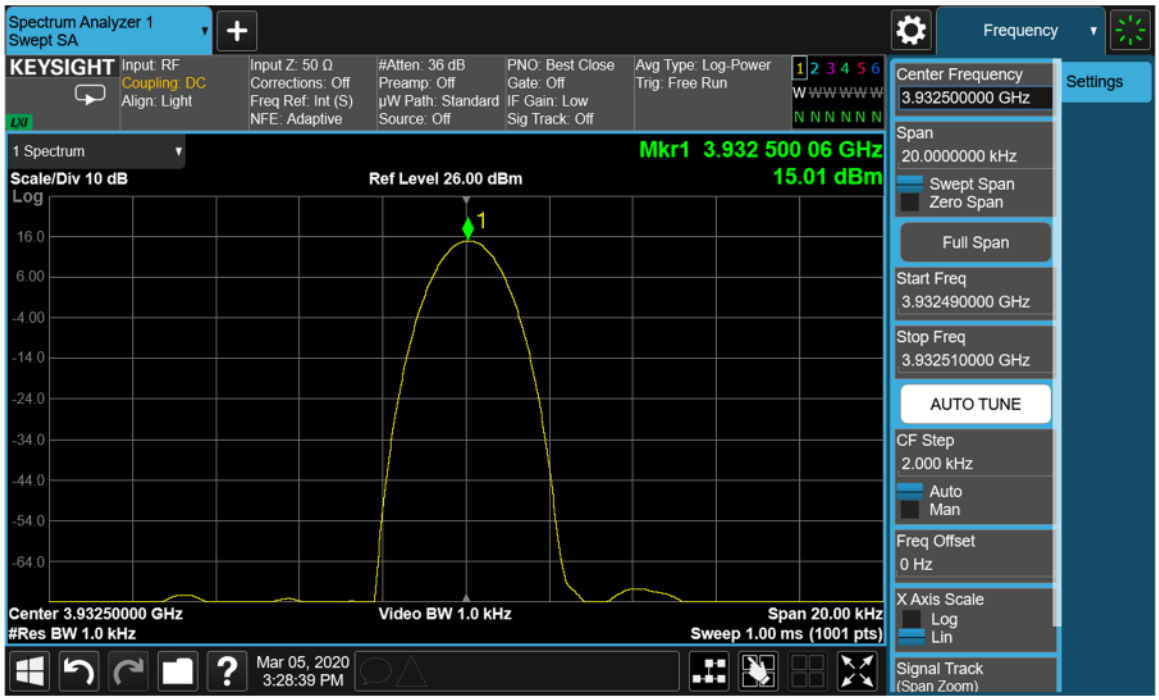

3. Table 10-6 shows the LO frequency and power level values at various center frequencies of the instrument. Tune the center frequency of the instrument under test to each Center Frequency value in the table, and the

measuring spectrum analyzer center frequency to the corresponding LO Frequency value, to verify the LO frequency and power at J1. Verify that the frequencies are stable and power levels are at least +10 dBm.

Table 10-6 Expected 1st LO Frequency and Power Levels

Center Frequency, GHz	LO Frequency at J1, GHz	Power Level at J1
3.61	3.932500	15.0 dBm
3.7	4.022 500	15.0 dBm
4.0	4.322 500	15.0 dBm
5.0	5.322 500	14.0 dBm
6.0	6.322 500	13.5 dBm
7.0	7.322 500	13.5 dBm
8.4	8.722500	13.8 dBm
9.0	9.322500	-5.4 dBm

4. If measurements made with the connections above do not indicate a failure, proceed to verify these LO signal values from the A20 YTO.

NOTE

Before replacing any assemblies, inspect ribbon cable W23 for damage. This cable allows the A14 DDS LO synthesizer to drive the A20 YTO frequencies.

YTO Output Verification

The following procedure will verify the output power level of the A20 Yig Tuned Oscillator.

NOTE

This procedure will use a directional coupler to measure the A20 Yig Tuned Oscillator output while still allowing the A14 DDS LO Synthesizer to continue to operate normally. The directional coupler will need to be able to cover the frequency range of 3 to 9 GHz.

1. Referring to Figure 10-17, remove W83 from the A20 Yig Tuned Oscillator output and connect a directional coupler input to it. Then either reconnect W83 to the output of the coupler or substitute another high quality cable for it and connect the other end to the A14 DDS LO Synthesizer output at J2. It will be necessary to remove the side RF Bracket to reach these connections. See Chapter 18, “Assembly Replacement Procedures,” in this manual.

   Alternatively, remove W83 from the other end at A14J2 and connect the directional coupler input to it with a right-angle SMA adapter. Then connect a high quality cable to the output of the coupler and connect the other end to A14J2.

Figure 10-17 A20 Yig Tuned Oscillator Output Connection

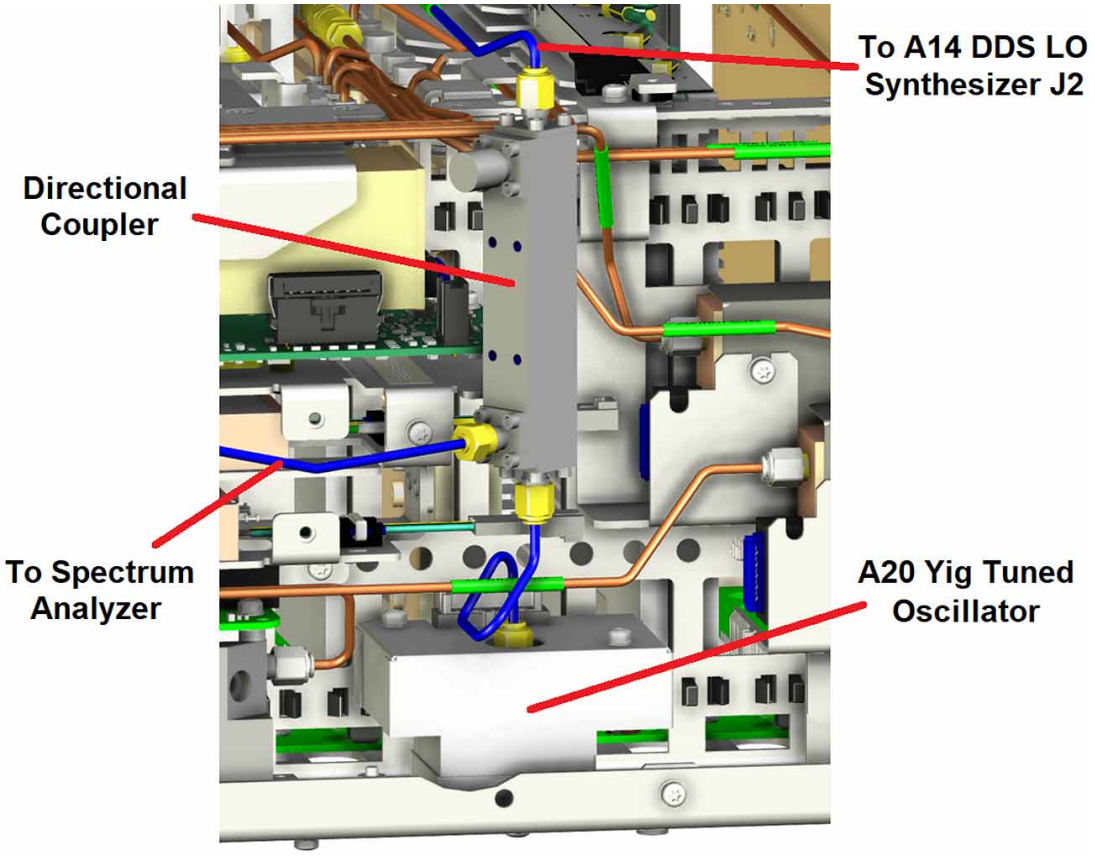

2. Connect an external spectrum analyzer to the coupled port of the directional coupler.
3. The LO Unlock error will cause the instrument application to cease functioning. Go to System Setting to close the application and restart from the instrument desktop.
4. Verify that the instrument is in spectrum analyzer mode by pressing **Mode/Meas**, **Spectrum Analyzer**, **OK**.
5. Return the instrument to a known state by pressing **Mode Preset**.
6. Turn the internal alignments off by pressing **System**, **Alignments**, **Auto Align**, **Auto Align Off**.
7. Set the measuring spectrum analyzer reference level offset to the coupling factor of the directional coupler being used.
8. Set the spectrum analyzer reference level to +20 dBm with a vertical scale of 5 dB per division.

NOTE Be sure to account for the loss of the cable being used when making this measurement. A power meter could also be used if there is any question about the accuracy using a cable and spectrum analyzer.

9. Tune the center frequency of the instrument under test to each Center Frequency value listed in Table 10-6, and the measuring spectrum analyzer center frequency to the corresponding LO Frequency value, to verify the LO frequency and power from the A20 YTO. Verify that the LO frequencies are stable and the power levels are at least +8 dBm, with the reference level offset set to equal the coupling factor of the directional coupler used.

A16 Reference Description

Purpose

The A16 Reference assembly provides the fundamental reference signals from which all instrument local oscillator and synchronous timing signals are derived. The Reference assembly also uses these same signals to generate CW and modulated RF calibration signals and a 10 MHz time base signal for the instrument.

The Reference assembly must be replaced as a single assembly, although it is constructed of multiple boards. They are:

- A16A1 Reference Main board
- A16A2 Reference Daughter board
- A16A3 Reference OCXO board (Option EP0 only)

The location of these three components can be seen in Figure 10-18.

Figure 10-18 A16 Reference Components (Option EP0)

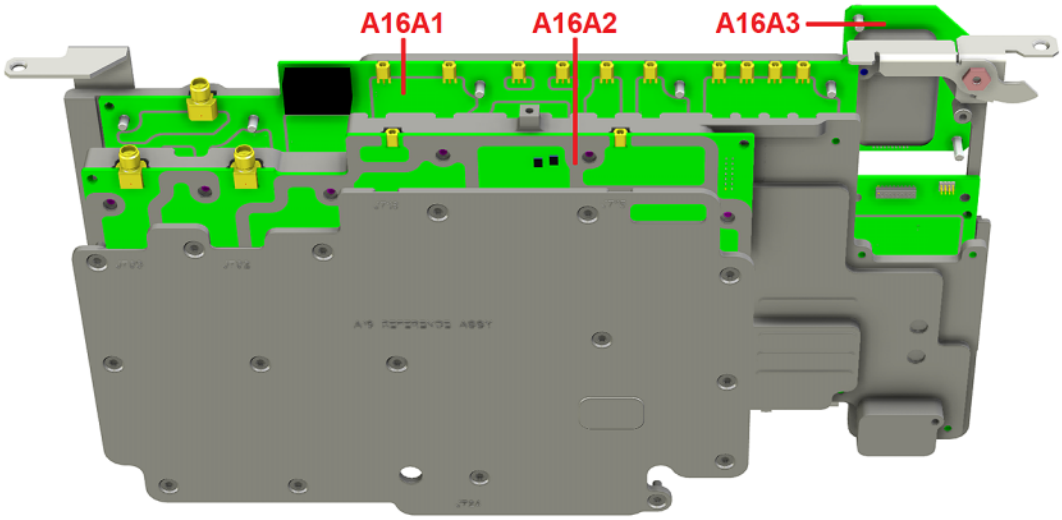

The A16A1 Reference Main and A16A2 Reference Daughter boards are listed individually in the Show Hardware screen, allowing identification of the individual board part numbers comprising the complete assembly. For instruments with Option EP0, the A16A3 Reference OCXO board, which houses the internal 10 MHz reference oscillator, can be replaced individually. For instruments with Option EP1, the OCXO is integrated into the A16A1 Reference Main board.

The reference signals and local oscillators are phase locked to a timebase in one of two ways:

1. The internal 10 MHz reference located on the A16A1 Main board (EP1) or A1A3 OCXO board (EP0).
2. An externally provided reference such as a house standard or the reference from another instrument or a base transceiver system. The external reference can be any RF signal in the range of 1 MHz to 50 MHz, -5 dBm to +10 dBm.

If an external reference signal is within 200 Hz of the specified external reference frequency and **Freq Ref In** is set to **Sense**, the analyzer will automatically switch from SENSE:INT to SENSE:EXT.

The phase noise performance of the reference signals establishes the limit on attainable phase noise performance of the LO signals derived from them. Therefore, excellent reference signals phase noise is required to achieve excellent LO signal phase noise.

Status monitoring is comprehensive. Every PLL is monitored for phase lock and every ALC is monitored for correct leveling. A set of LED's which indicate whether the 100 MHz VCXO PLL and the 2400 MHz SAW VCO PLL is phase locked or unlocked. Each oscillator (10 MHz, 100 MHz, 2400 MHz) is monitored for the presence of RF power (dead/alive status).

Table 10-7 lists all the reference signals provided by the A16 Reference Assembly.

Table 10-7 A16 Reference Assembly Signals

Signal Description	From Location	Originates From	To Location	Purpose
External Reference Input (1 to 50 MHz, -5 dBm to +10 dBm)	Input from User	n/a	A16704	Phase Lock analyzer with user-provided reference.
10 MHz Out DIF	A16J710	10 MHz Reference	Not used	Reserved for future use
50 MHz Align Signal	A16J701	100 MHz VCXO/2	A9	50 MHz Low band alignment signal
4800 MHz Align Signal	A16J701	2.4 GHz VCXO x 2	A9	4.8 GHz High band alignment signal
50 MHz Ecal/300 MHz Comb Output	A16J705	100 MHz VCXO/2, 100 MHz VCXO x 3	A13J6	50 MHz Cal Signal or 300 MHz Comb for wideband IF phase linearity
100 MHz LO Synth	A16J706	100 MHz VCXO	A14J10	100 MHz reference for both single-loop and dual-loop operation
100 MHz Ref A	A16J707	100 MHz VCXO	Not used	Reserved for future use
100 MHz Ref B	A16J716	100 MHz VCXO	A3J14	Frequency reference for A3 Digital IF (DIF) assembly. Divided by 10 on DIF to provide 10 MHz OUT on rear panel.
100 MHz Ref C	A16J717	100 MHz VCXO	Not used	Reserved for future use
300 MHz LO AIF	A16J711	100 MHz VCXO x 3	A2J300	Used as 3rd LO on A2 Analog IF (AIF) assembly
2.4 GHz Ref	A16J718	2.4 GHz VCXO	A25J301	Reference for A25 Wideband Analog IF (WAIF)
4.8 GHz 2nd LO	A16J702	2.4 GHz VCXO x 2	A13J1	2nd LO for A13 Front End assembly, downconvert low band 1st IF to 322.5 MHz 2nd IF
4.8 GHz 1st LO Ref (EP1 only)	A16J703	2.4 GHz VCXO x 2	A14J4	4.8 GHz reference for Offset Loop, only used in Dual-Loop operation
7.2 GHz Ref Out (EP0 only)	A16J703	2.4 GHz VCXO x3	A14J35002	A14 DDS LO Clock

A16 Reference Troubleshooting

Reference Signal Verification

If the A16 Reference assembly is suspect, verify the reference signals, local oscillator output frequencies, and power levels as per Table 10-8 using an external spectrum analyzer. In order to measure the signals, you will need to remove the top brace. Refer to the "Top Brace and Power Supply Bracket" removal procedure on page 441 for details.

The board layout in Figure 10-19 identifies the input and output connectors on the A16 Reference Assembly.

If the outputs measure correctly, the A16 Reference Assembly is functioning correctly. If not, the Reference Assembly is the most probable cause provided the power supply is operating correctly. Refer to "A7 Midplane Assembly Troubleshooting" on page 312 if the power supplies are suspect.

Table 10-8 A16 Reference Assembly Signal Measurement Details

Figure 10-19 A16 Reference Assembly

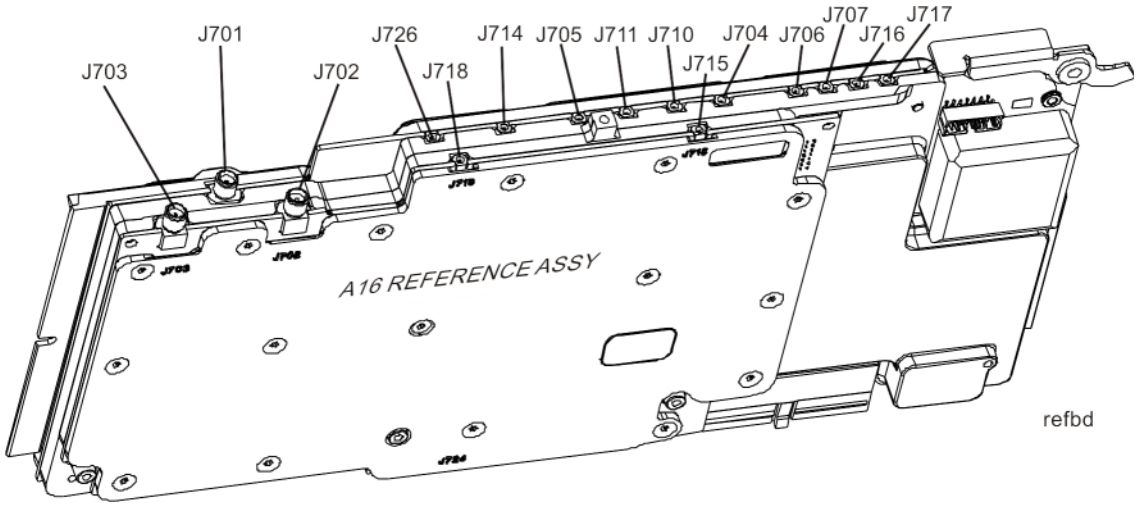

Table 10-8 A16 Reference Assembly Signal Measurement Details

Signal Description	Signal Location	Expected Frequency (MHz)	Expected Power Level (dBm)	Special Instrument Conditions	Figure
50 MHz Ecal Out	J705	50 MHz	–26 to –29 dBm typical	While monitoring A16J705 output, place functioning spectrum analyzer in Max Hold. Press **System**, **Alignments**, **Align Now**, **All** on PXA.	Figure 10-20
4.8 GHz 2nd LO Out	J702	4800 MHz	+11 dBm	Press **Freq**, **1 GHz**, **Span**, **Zero Span** on PXA	Figure 10-21
4.8 GHz 1st LO Ref Out (EP1 only)	J703	4800 MHz	+3 dBm	Press **Freq**, **50 MHz**, **Span**, **Zero Span**, **Meas Setup**, **PhNoise Opt**, **Best Close in PNoise** on PXA	Figure 10-22
7.2 GHz Ref Out (EP0 only)	J703	7200 MHz	+1.8 dBm		Figure 10-16
50 MHz Ref Out	J701	50 MHz	–25 dBm	Press **Input/Output**, **Input**, **RF Calibrator**, **50 MHz** on PXA	Figure 10-23
4.8 GHz Ref Out	J701	4800 MHz	–28 dBm	Press **Input/Output**, **Input**, **RF Calibrator**, **4.8 GHz** on PXA	Figure 10-24
2.4 GHz Ref Out	J718	2400 MHz	+10 dBm		Figure 10-25
300 MHz LO AIF	J711	300 MHz	+10 dBm		Figure 10-26
100 MHz Ref Output	J706	100 MHz	+13 dBm		Figure 10-27
100 MHz Ref B Out	J716	100 MHz	+13 dBm		Figure 10-28

Figure 10-20 50 MHz Ecal Out

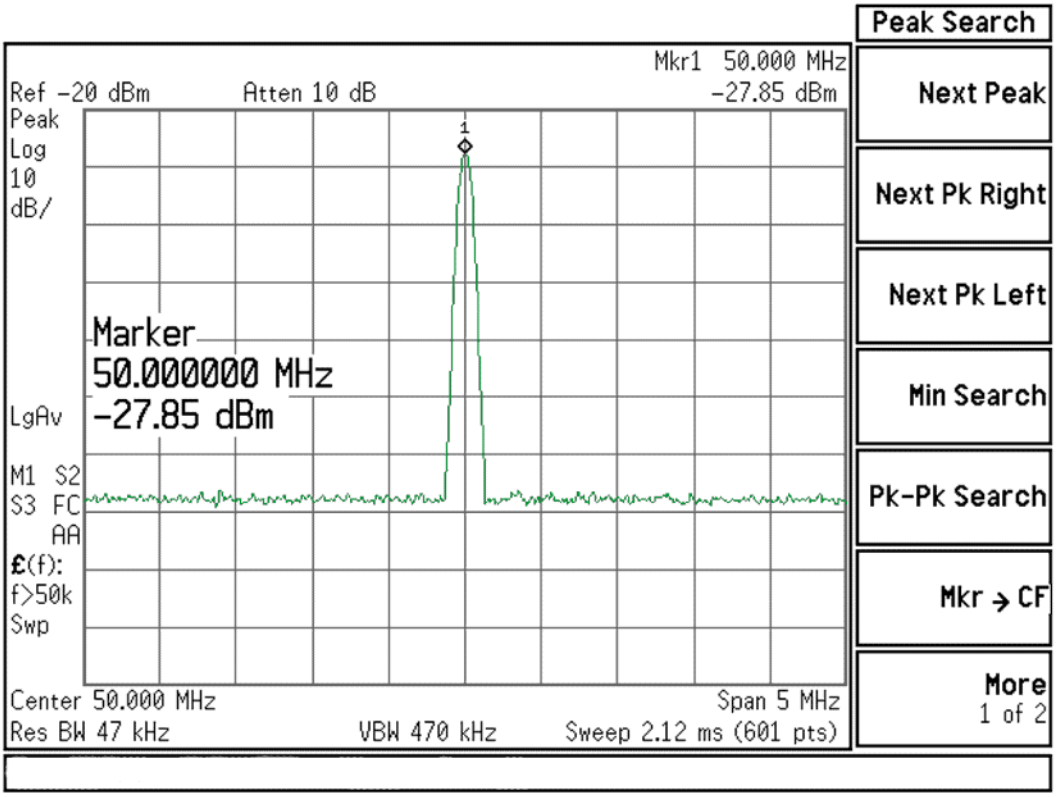

Figure 10-21 4.8 GHz 2nd LO Out

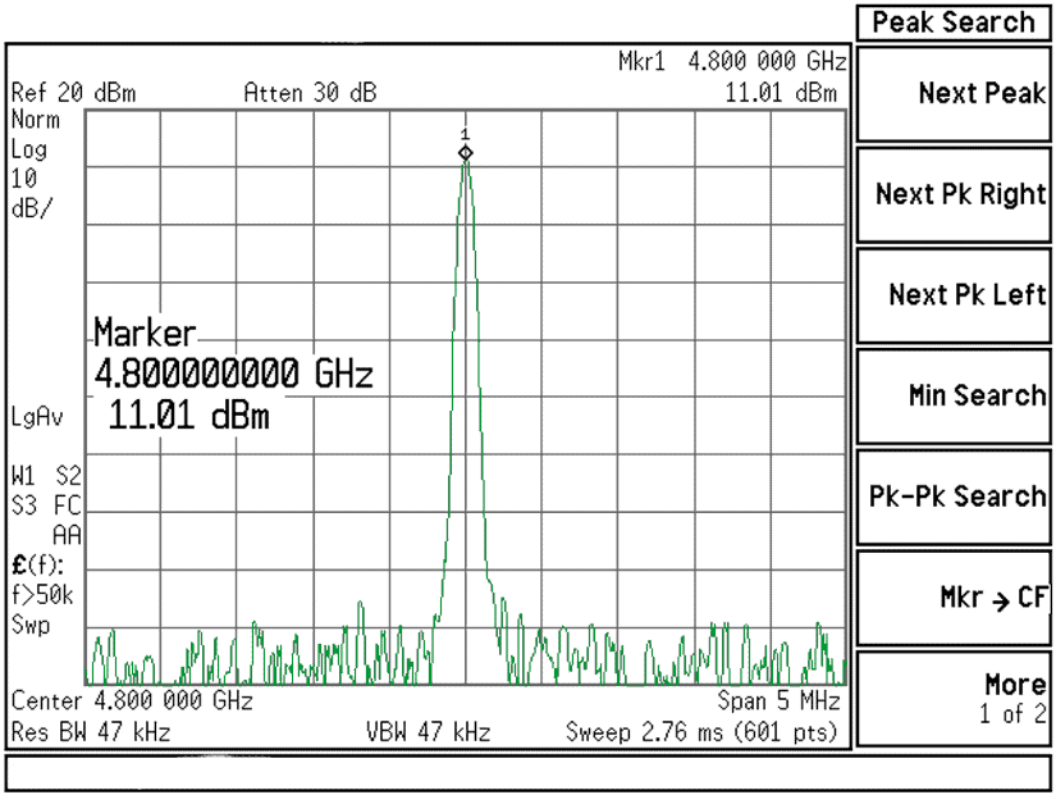

Figure 10-22 4.8 GHz 1st LO Ref Out

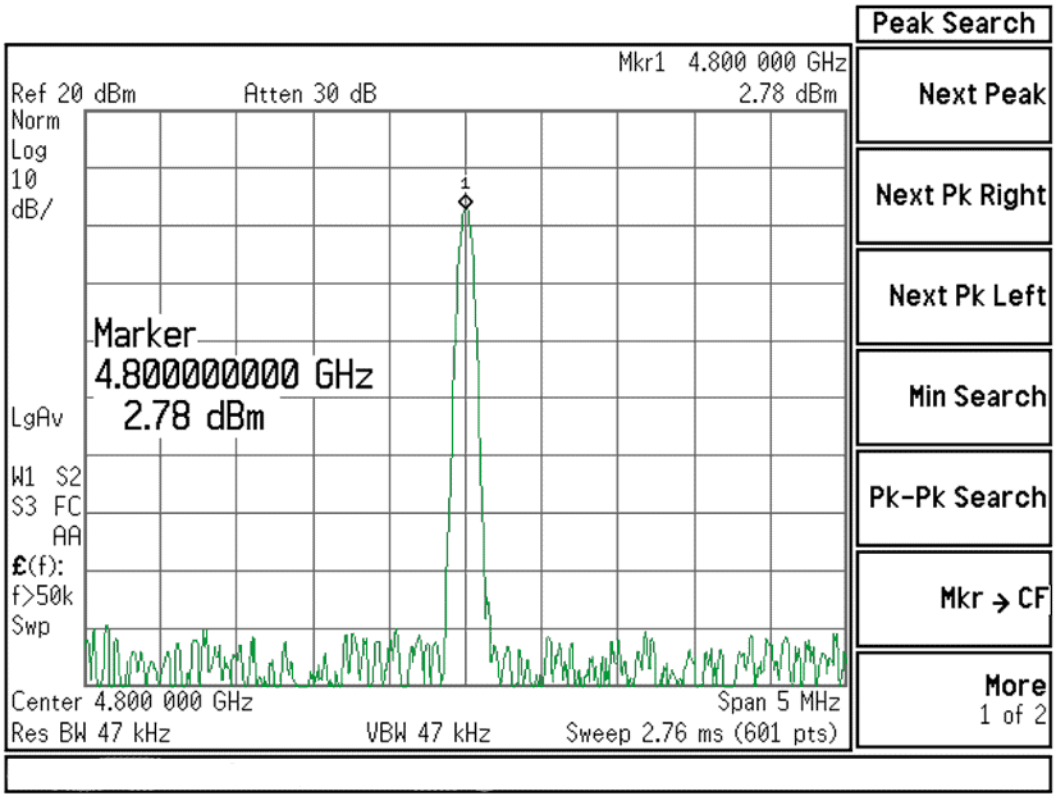

Figure 10-23 50 MHz Ref Out

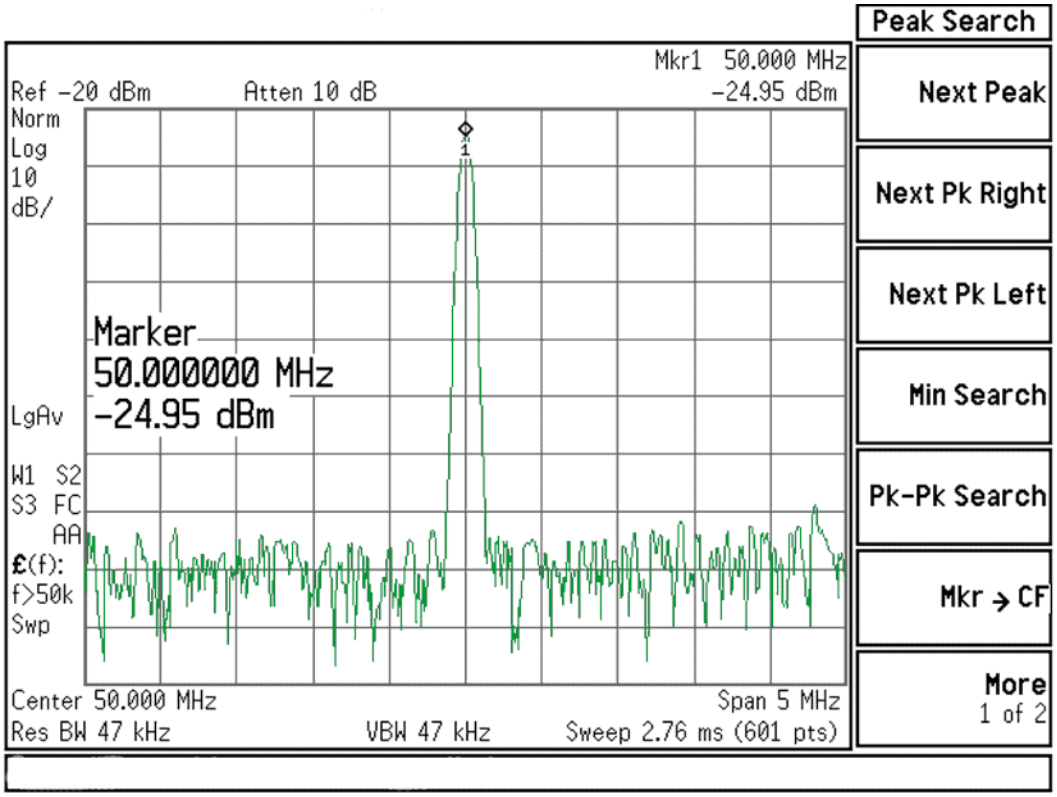

Figure 10-24 4.8 GHz Ref Out

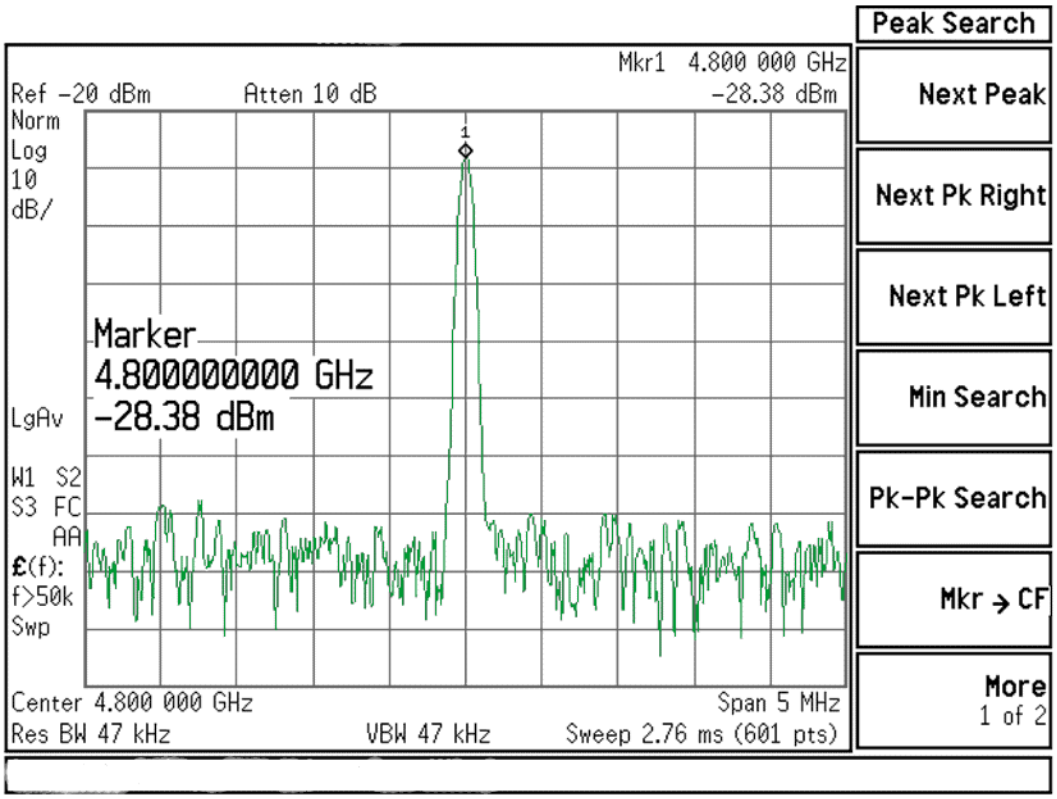

Figure 10-25 2.4 GHz Ref Output

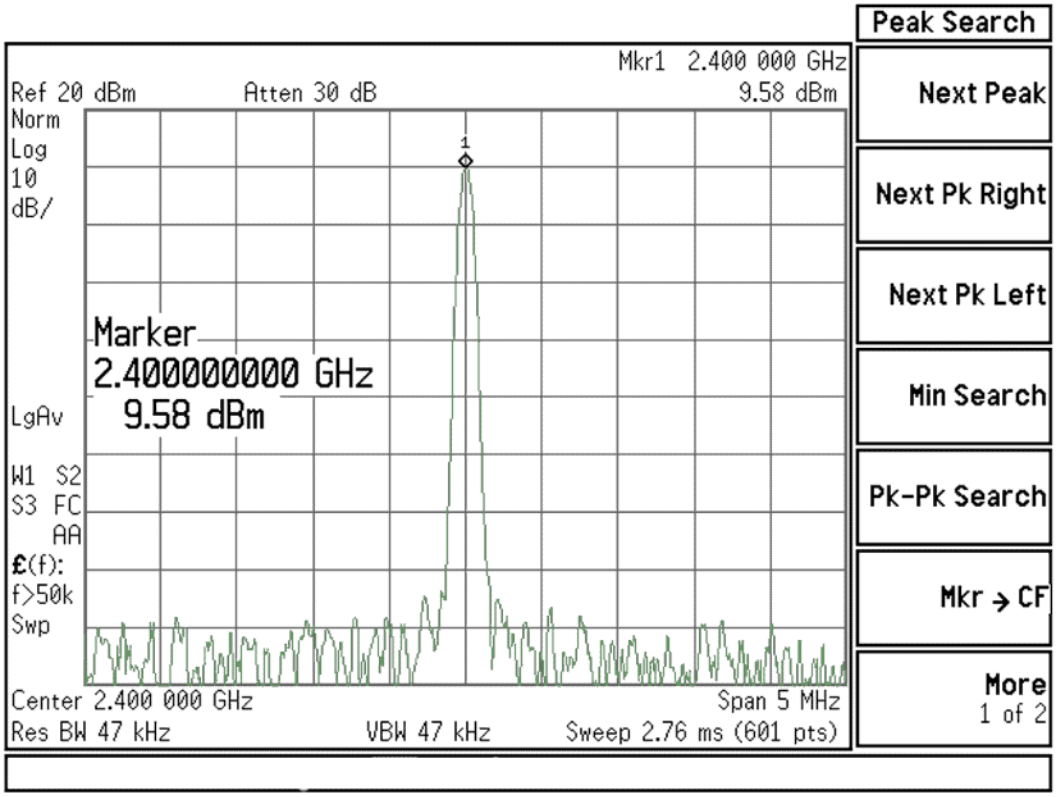

Figure 10-26 300 MHz LO AIF

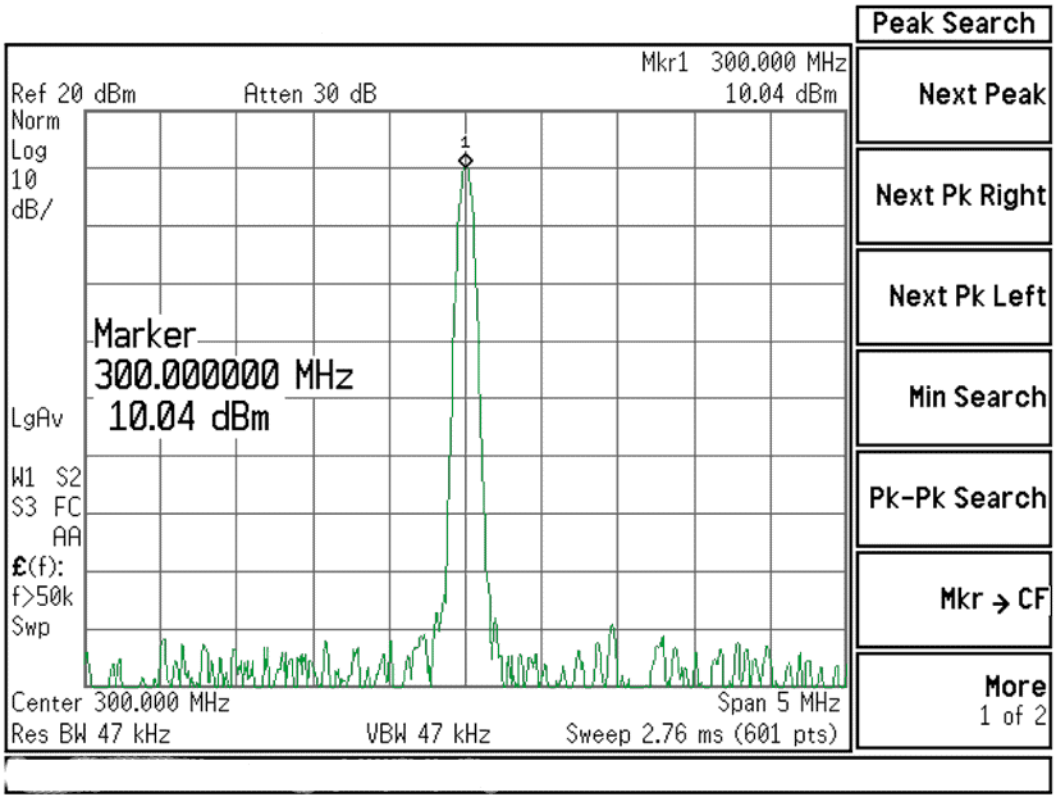

Figure 10-27 100 MHz Ref Out

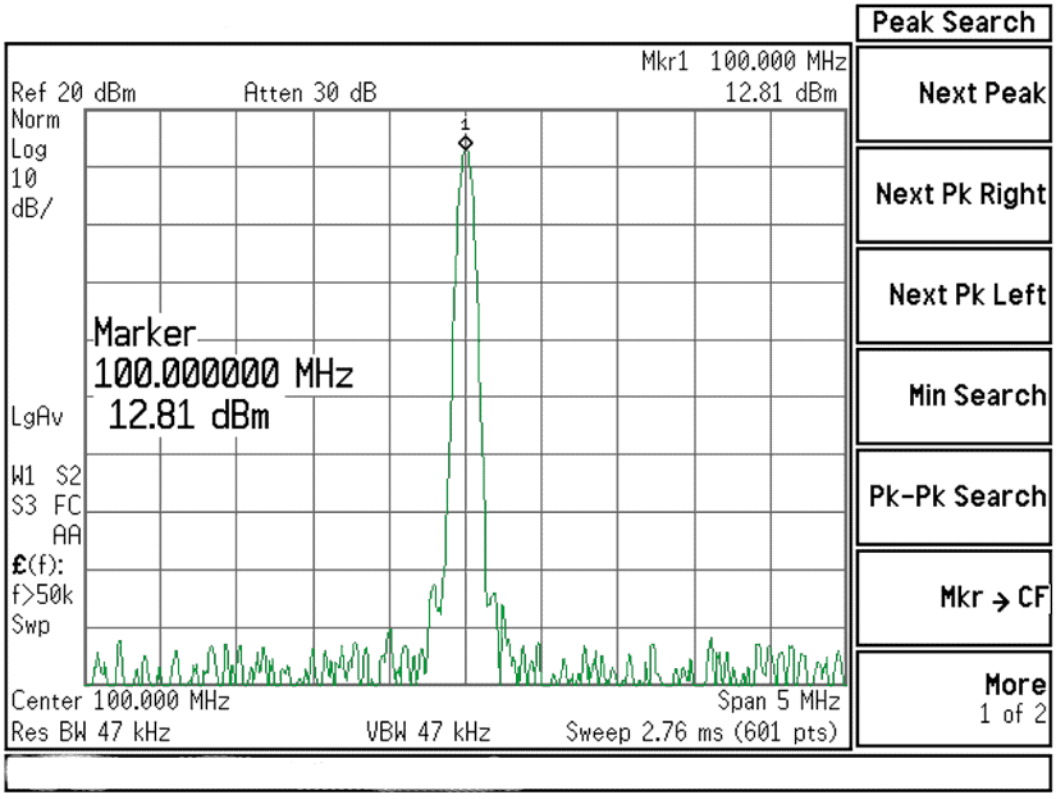

Figure 10-28 100 MHz Ref B Out

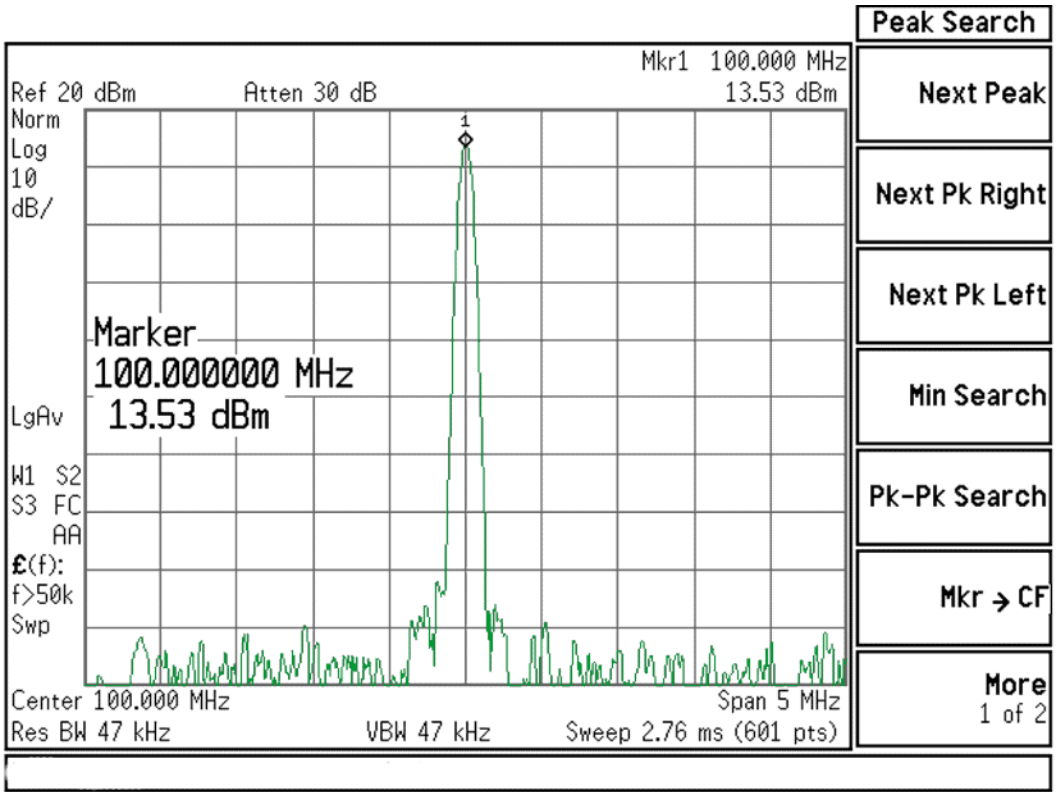

Option EP1 Status LED Verification

There are two sets of status LEDs on the Option EP1 version of the A16 Reference Assembly. Six LEDs are on the right side of the A16A1 Reference Main board and five LEDs are on the A16A2 Reference Daughter board. Refer to Figure 10-29.

Figure 10-29 A16 Reference Status LED Locations

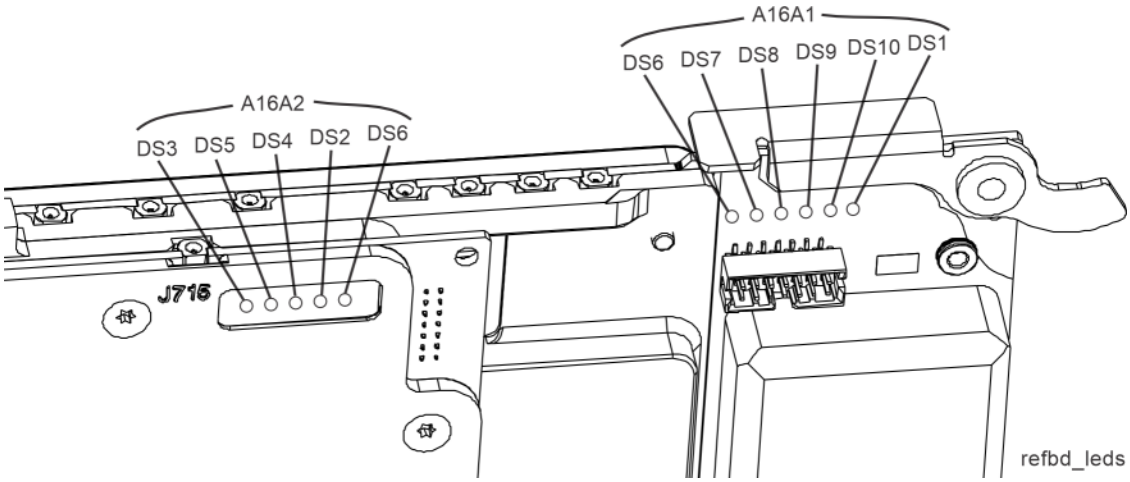

Table 10-9 lists the LEDs and what their status indicates. A blinking red LED typically indicates that an unleveled condition exists. The number of blinks indicates what circuitry is unleveled, as indicated in the table.

Table 10-9 A16 Reference Assembly Status LEDs

LED Number	Color	Description	Status
A16A1DS1	Yellow	When Program Code is loading	On=Loading code from EEPROM Off=Ready
A16A1DS6	Red	100 MHz Unlocked	On=100 MHz VCXO is unlocked 1 Blink = 4.8 GHz calibrator unleveled 2 Blinks = 50 MHz calibrator unleveled 3 Blinks = 300 MHz LO_AIF unleveled Off=Normal (locked)
A16A1DS7	Green	Is the 100 MHz PLL Unlocked?	On=Normal (locked) Off=Fault (unlocked)
A16A1DS8	Green	Is the 100 MHz VCXO working?	On=Yes (alive) Off=Fault (not alive)
A16A1DS9	Green	Is Internal 10 MHz Reference On?	On=Yes (enabled) Off=No (disabled; Ext Ref Mode)
A16A1DS10	Green	Is the +15V Standby supply working?	On=Yes (+15 Standby supply is on) Off=No

Table 10-9 A16 Reference Assembly Status LEDs

LED Number	Color	Description	Status
A16A2DS2	Red	When 2.4 or 4.8 GHz frequency is low	On=Fault (output frequency is low) 2 Blinks = 2.4 GHz Ref ALC unleveled 3 Blinks = 300 MHz Ref ALC unleveled Off=Normal
A16A2DS3	Red	When 2.4 or 4.8 GHz frequency is high	On=Fault (output frequency is high) 2 Blinks = 4.8 GHz LO ALC unleveled 3 Blinks = 2.4 GHz LO ALC unleveled Off=Normal
A16A2DS4	Green	Is the 2.4 GHz reference PLL locked?	On=Normal (locked) Off=Fault (unlocked)
A16A2DS5	Green	Is the 2.4 GHz VCXO working?	On=Yes (alive) Off=Fault (not alive)
A16A2DS6	Yellow	When Program Code is loading	On=Loading code from EEPROM Off=Ready

Option EP0 Status LED Verification

There are status LEDs on all three of the Option EP0 version of the A16 Reference assembly boards, some are visible while others are not.

A16A1 Reference Main

While there are multiple status LEDs on the A16A1 Reference Main, only one of them is viewable when the assembly is in the instrument. However, the status LEDs on the A16A3 Reference OCXO that can be seen are related to A16A1 Reference Main circuits.

The one LED on the A16A1 Reference Main that can be seen is DS10 and it indicates the status of the +15 VSTBY. It should be on (green) whenever the instrument is plugged into the AC mains, even when the instrument is in standby mode. The location of DS10 can be seen in Figure 10-30.

Figure 10-30 A16A1 Reference Main Status LED Location

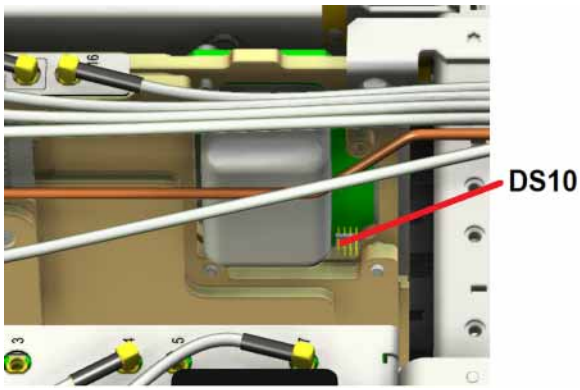

If DS10 is not on when it should be, see the "Power Supply Verification" section in Chapter 5, "First-Look Troubleshooting," to determine if the A6 Power Supply is having a problem, or if it is due to a problem with the power supply filtering on the A16 Reference assembly.

A16A2 Reference Daughter

There are five LEDs on the A16A2 Reference Daughter that can be seen. A listing of these can be seen in Table 10-10, and the location of each can be seen in Figure 10-31.

Table 10-10 A16A2 Reference Daughter Status LEDs

LED	Description	Color	Normal State
DS2	2400 MHz Reference Low	Red	Off
DS3	2400 MHz Reference High	Red	Off
DS4	2400 MHz Reference Locked	Green	On

Table 10-10 A16A2 Reference Daughter Status LEDs

LED	Description	Color	Normal State
DS5	2400 MHz Reference OK	Green	On
DS6	FPGA Programming	Yellow	Off

Figure 10-31 A16A2 Reference Daughter Status LED Locations

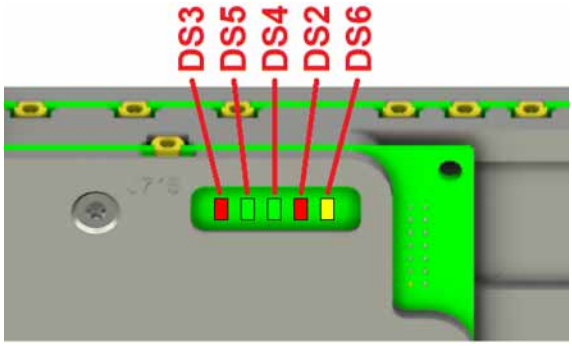

DS2 - Red

This LED may come on very briefly during the initial instrument power on, then it will go off as DS4 and DS5 come on, indicating that the 2400 MHz SAW oscillator is working properly. If it does stay on this would indicate that the 2400 MHz SAW oscillator phase lock loop is railed low.

DS3 - Red

This LED may come on very briefly during the initial instrument power on, then it will go off as DS4 and DS5 come on, indicating that the 2400 MHz SAW oscillator is working properly. If it does stay on this would indicate that the 2400 MHz SAW oscillator phase lock loop is railed high.

DS4 - Green

This LED should come on very shortly after the instrument power is turned on, as it indicates that the 2400 MHz SAW oscillator phase lock loop is working properly. It does not require that the instrument completes all its hardware initialization before it will come on.

DS5 - Green

This LED should come on very shortly after the instrument power is turned on, as it indicates that the 2400 MHz SAW oscillator is working properly. It does not require that the instrument completes all its hardware initialization before it will come on.

DS6 - Yellow

This LED will be on when the instrument power is first turned on. Once the FPGAs on the A16 Reference Daughter have properly loaded it will go off.

A16A3 Reference OCXO

There are four LEDs on the A16A3 Reference OCXO board. They indicate the status of circuits on the A16A1 Reference Main. A listing of these can be seen in Table 10-11, and the location of each can be seen in Figure 10-32.

Table 10-11 A16A3 Reference OCXO Status LEDs

LED	Description	Color	Normal State
DS1	FPGA Alive	Green	On
DS6	100 MHz Unlocked	Red	Off
DS7	100 MHz Locked	Green	On
DS9	10 MHz On	Green	On

Figure 10-32 A16A3 Reference OCXO Status LEDs

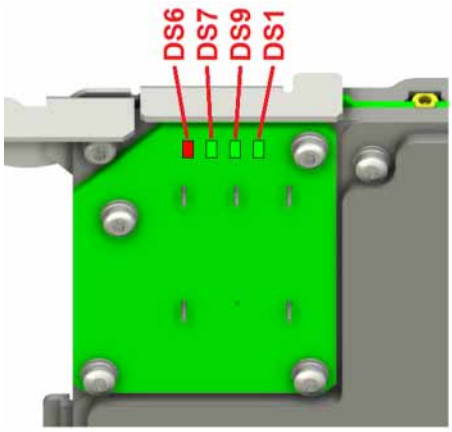

DS1 - Green

This LED should come on very shortly after the instrument power is turned on, as it indicates that the FPGAs on the A16A1 Reference Main have loaded properly and are alive.

DS6 - Red

This LED may come on briefly during the initial instrument turn on, then it should go off as DS7 comes on, indicating that the 100 MHz oscillator phase lock loop is locked.

DS7 - Green

This LED will come on shortly after the instrument power is turned on, as it indicated that the 100 MHz oscillator phase lock loop is locked.

DS9 - Green

This LED should come on very shortly after the instrument power is turned on, as it indicates that the 10 MHz OCXO on the A16A3 Reference OCXO is alive.

11 CPU/Disk Drive

What You Will Find in This Chapter

The following information is presented in this chapter:

1. Theory of operation of the CPU section.
2. Isolating the cause of a hardware problem by verifying the functionality of assemblies in the CPU section.

NOTE Each section first describes how the assembly works, then gives information to help you troubleshoot the assembly. Each description explains the purpose of the assembly, describes the main components, and lists external connections to the assembly

This following sections are found in this chapter:

A4 CPU Description on page 280

A4 Processor Board Assembly Troubleshooting on page 282

A5 Disk Drive on page 294

Troubleshooting software related issues on page 296

Reloading the X-Series Software on page 297

Instrument Image Recovery Process on page 298

A4 CPU Description

If the CPU board is suspect in an instrument failure, a full description of the instrument boot process is described in Chapter 2, “Boot Up and Initialization”.

Disk Drive

The A5 Disk Drive can easily be removed from the A4 CPU assembly without removing instrument covers. The disk drive is attached to a tray that is accessed on the rear panel by loosening one screw and pulling the drive out of the CPU assembly. The disk drive mates with the CPU board via the A4A1 Disk Drive Interface Board. If the A4 CPU assembly is replaced, the existing A5 Disk Drive must be transferred to the replacement CPU assembly.

A4A1 Disk Drive Interface Board

The disk drive interface board plugs into a header on the A4 CPU, attaches with screws, and is separately replaceable. There may be situations where the disk drive must be removed and inserted many times such as in a security sensitive environment. Therefore, the low cost disk drive interface board can be replaced if connector wear is an issue.

Front Panel Interface

The instrument USB bus is the electrical interface to the instrument front panel. One of the USB ports on the host controller hub located on the A4 CPU board assembly is routed to the A1A2 Front Panel Interface board for this use. The port is a High Speed USB (2.0) compliant port.

Graphics Controller

The entire graphics subsystem is contained within a single chip, along with the interface logic to map memory from main system memory for the video RAM. There are two outputs of the graphics controller that are used by the instrument. One provides the LCD video data to drive the internal instrument LCD display and the other supplies the rear panel VGA output.

Power Supply Control

The power control line from the front panel momentary power switch connects to the A4 CPU board assembly. When the front panel power switch is turned on the A4 CPU board assembly pulls the PS_ON line to the A6 Power Supply assembly to a TTL low level, which tells the power supply to turn on. Once the +12V D, +5.1V D, and +3.35V D supplies are all on and within specification the A6 Power Supply assembly pulls the PWROK_H line to a TTL high state, which then causes the A4 CPU board to come out of reset and boot-up.

Outputs from the A4 CPU board assembly also drive the two front panel power state LEDs.

Provisions have also been made to allow the CPU board to remember which power state it was in when a power failure occurs. The instrument will return to the same power state after a power failure.

Rear Panel Connectivity

The A4 CPU board assembly has direct access to the rear panel of the instrument. The external connections provided on the A4 CPU board assembly include:

- External VGA
- LAN (RJ45) 10/100/1000 based-T Ethernet port
- USB
    - 4 x Type-A ports (USB 2.0 compatible)
    - 1 x Type-B port (USB 2.0 compatible) Instrument behaves like a USB device (client)
- GPIB

System Memory

The type and amount of system RAM in the instrument may vary depending on the age and options installed in an instrument.

Current instruments will have 4 GBytes of DDR SDRAM in two 200-pin SODIMM memory modules.

While the memory controller chips do support a wide range of DDR memory types, only memory fully qualified by Keysight Technologies is supported. Full qualification includes mechanical vibration and shock, thermal and power dissipation and the basic electrical characteristics.

The 200-pin SODIMM memory modules are not field replaceable.

All replacement A4 CPU board assemblies come with the appropriate memory modules installed.

System Processor

The A4 CPU board assembly uses an Intel Pentium-M series processor chip.

CPU Battery

The LI-ION battery powers the instrument clock and maintains the settings for the CMOS BIOS configuration. Keysight changes the boot order setting so the instrument disk drive is first. If the battery fails, the boot order reverts to the USB first. Therefore if a non-bootable USB device is connected when the instrument powers up, a black screen with a message such as: “Failure: No bootable partition in table” will result and may cause the user to believe the instrument is faulty.

A4 Processor Board Assembly Troubleshooting

The A4 Processor board assembly is serviced as an assembly only; no component level repair is supported.

Boot-Up or Initialization Problems

Typical failures of the A4 Processor board assembly will cause the instrument to not boot-up or initialize properly. These types of failures can also be caused by a variety of other assemblies as well. In order to determine whether a problem such as this is being caused by a defective A4 Processor board assembly, first see the "Instrument Boot Up Process" to eliminate other possibilities.

Remote Monitor Troubleshooting

When an external monitor is connected to the analyzer, the remote monitor should automatically begin working.

If the remote monitor does not function, perform the following:

1. Turn off the analyzer.
2. Assure the external monitor has power and that the VGA cable is connected properly to both the monitor and the analyzer.
3. Turn on the analyzer and wait for it to fully boot-up.
4. Connect a mouse to the analyzer, and either click on the desktop, or on the blue display icon on the task bar. Choose **Graphics Properties**.
5. Compare the settings on your analyzer to the settings shown below:

Figure 11-1 Monitor Set-Up

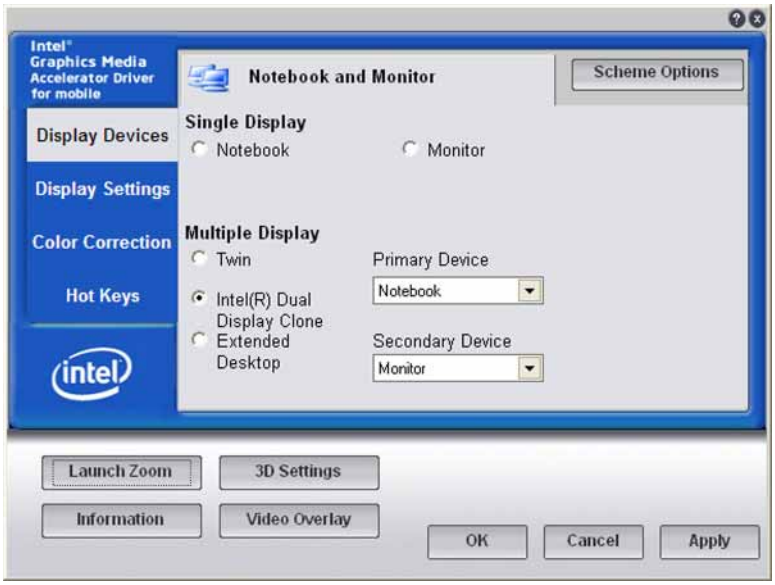

BIOS Settings

As with other types of PC processor board assemblies the A4 Processor board assembly has a number of settings particular to the hardware on the board. These settings are saved in a separate memory location on the board and accessed by the BIOS (Basic Input Output System) Setup Utility. If these settings are changed from those that the instrument was initially shipped with this could cause a problem with the booting and/or functionality of the instrument.

If the instrument is having a problem booting up, but is functional enough to enter the BIOS Setup Utility you will want to verify that the BIOS settings have not been changed. The instrument was originally shipped with the settings shown in Figure 11-2 through Figure 11-20.

Accessing BIOS Setup Utility (serial numbers <MY/SG/US51360000)

To successfully navigate the BIOS Setup Utility you will need to have an external USB keyboard connected to the instrument. Then, when the initial Keysight Technologies splash screen is displayed at power-up, press F2 on the keyboard. Once this is pressed you should see a display like that of Figure 11-2, the main BIOS Setup Utility screen.

If you select to use the “Load Setup Defaults” function found on the BIOS Exit menu (Figure 11-20) you will then need to reset the following settings. They are:

– “IDE 2:” under “Boot priority order:” to position “1” (Figure 11-19)

Figure 11-2 BIOS Setup Utility - Main

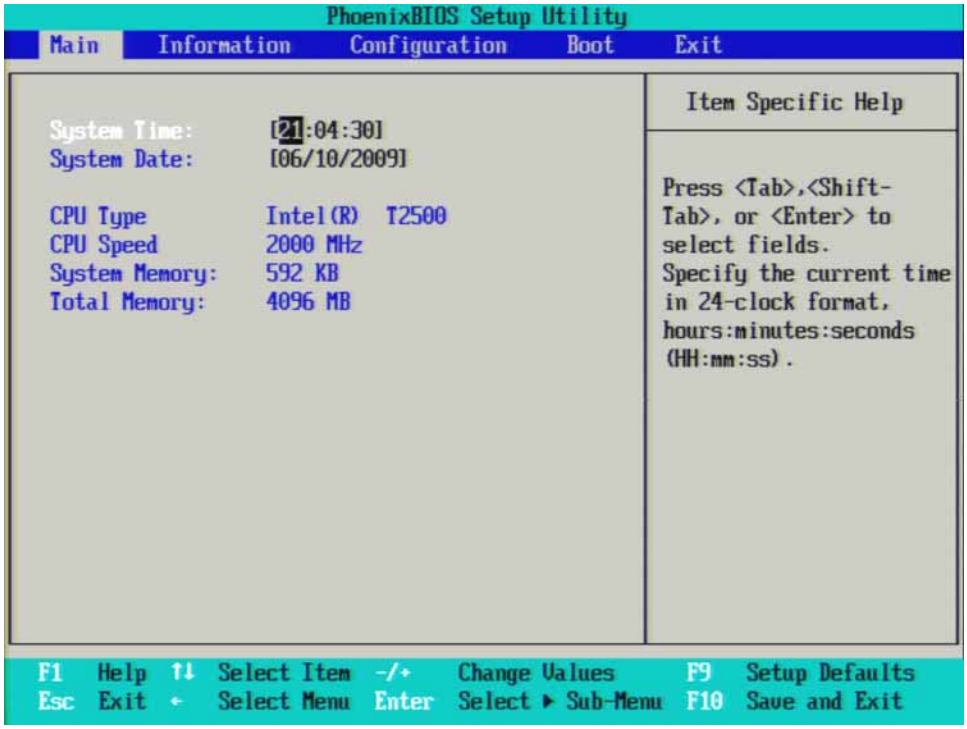

Figure 11-3 BIOS Setup Utility - Information

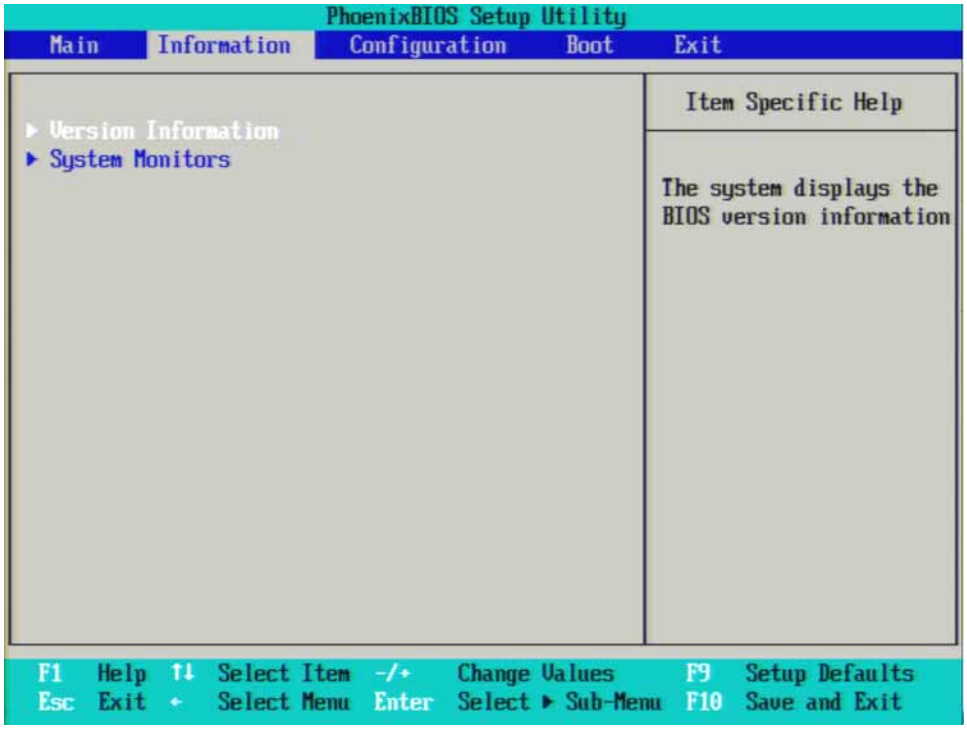

Figure 11-4 BIOS Setup Utility - Information > Version

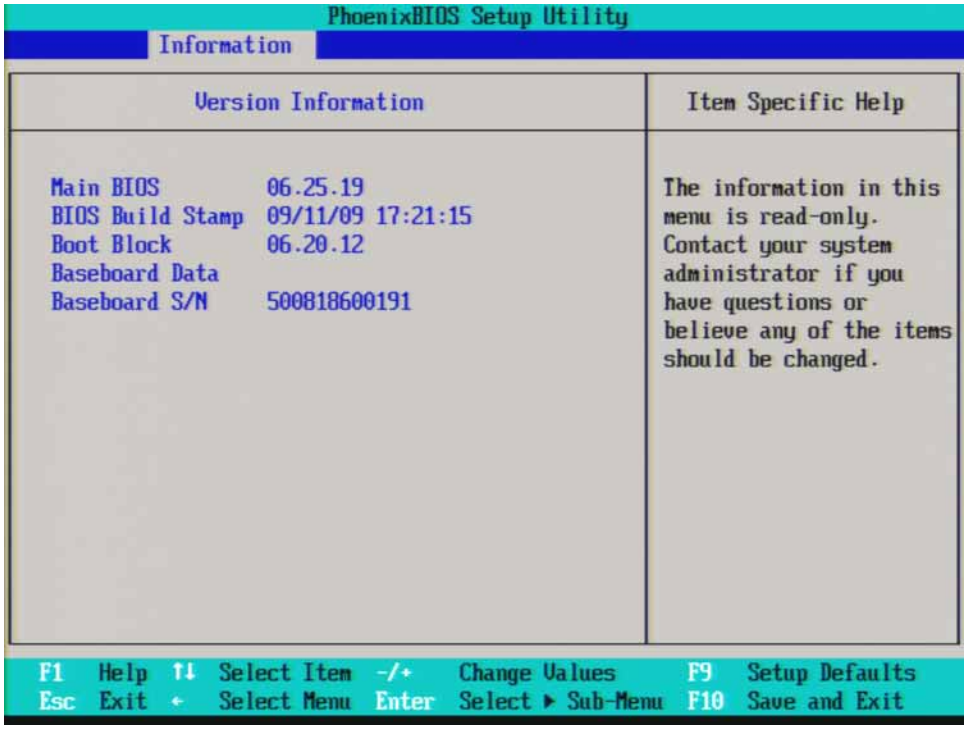

Figure 11-5 BIOS Setup Utility - Information > System Monitors

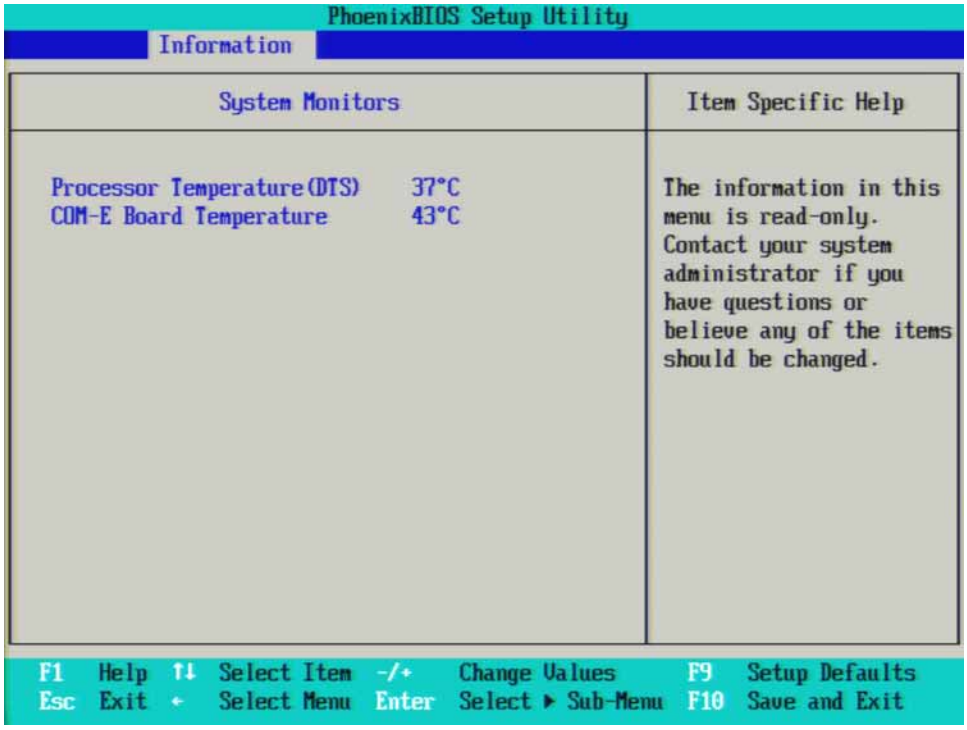

Figure 11-6 BIOS Setup Utility - Configuration

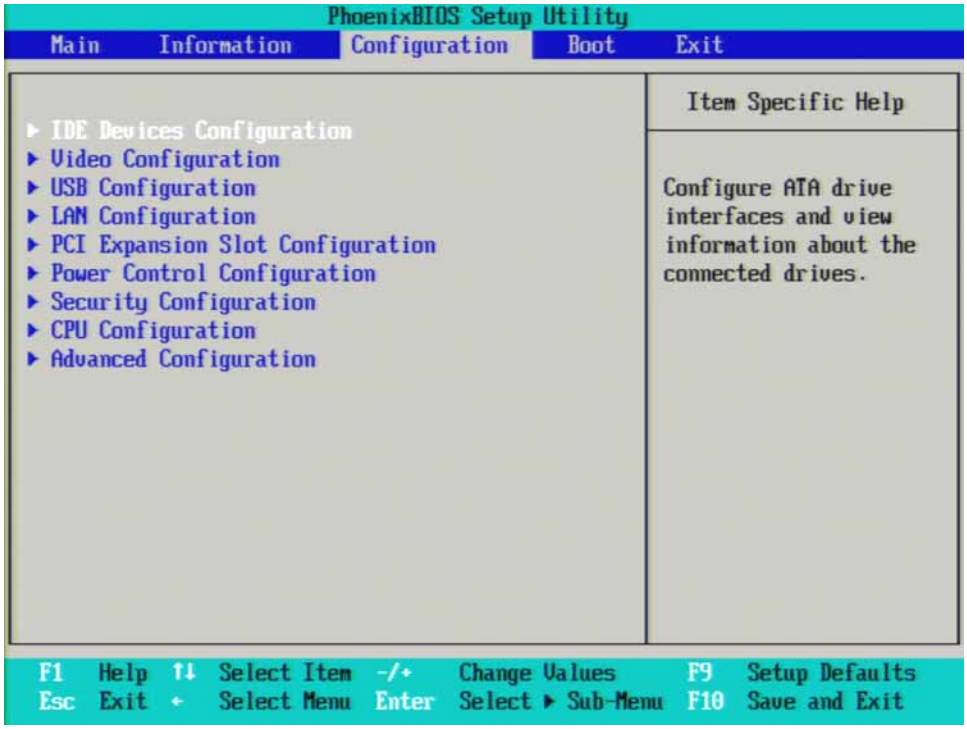

Figure 11-7 BIOS Setup Utility - Configuration > IDE Devices

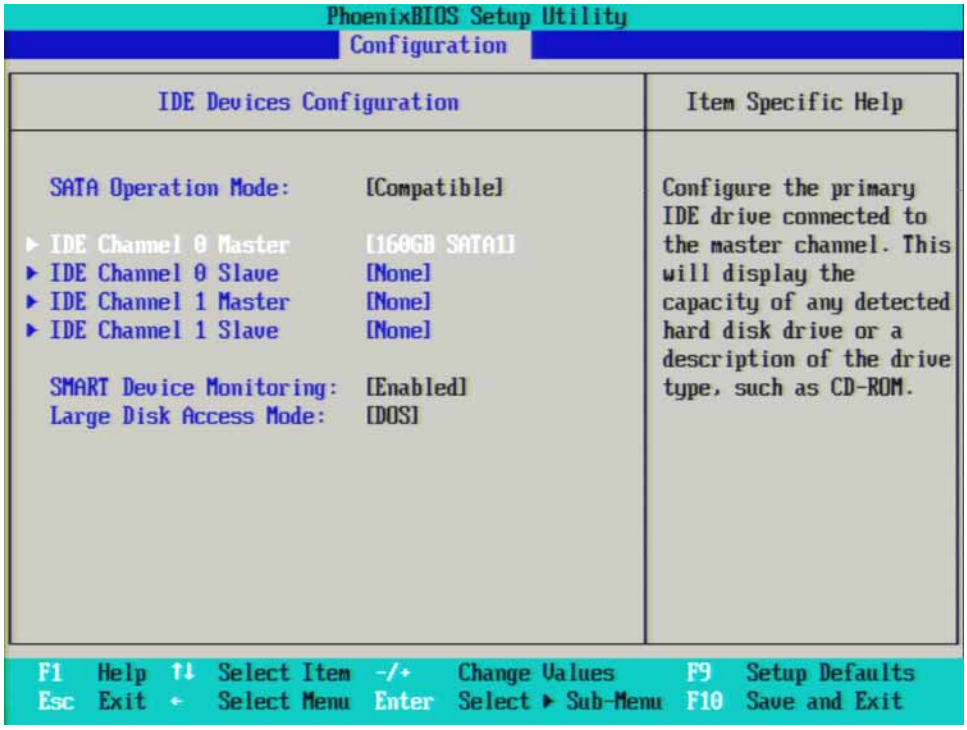

Figure 11-8 BIOS Setup Utility - Configuration > Video

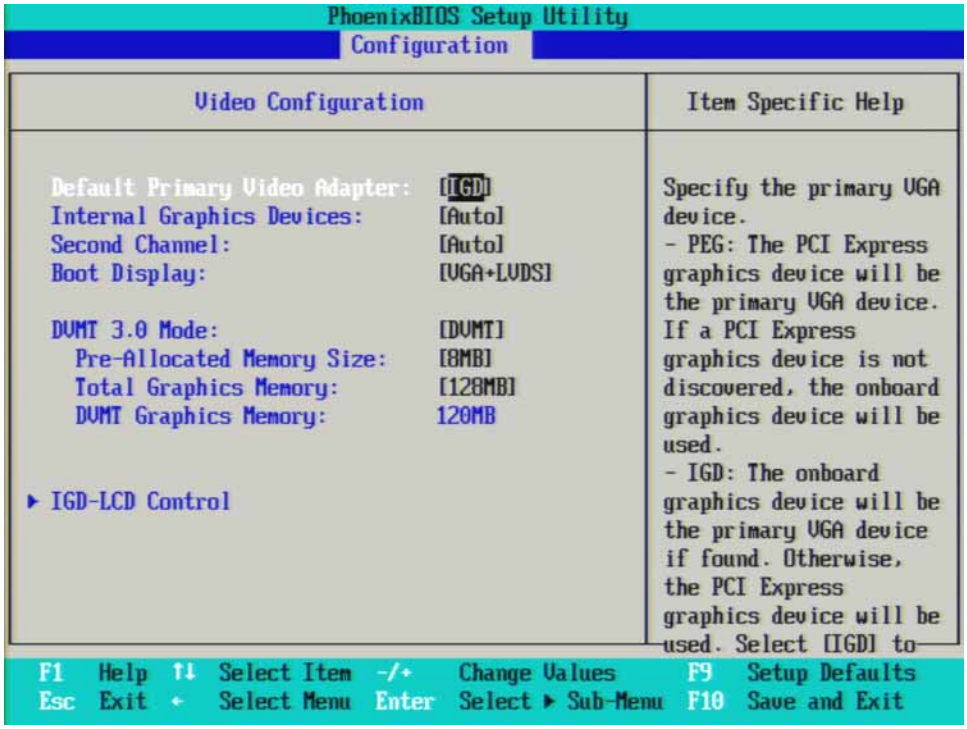

Figure 11-9 BIOS Setup Utility - Configuration > Video > IGD-LCD Control

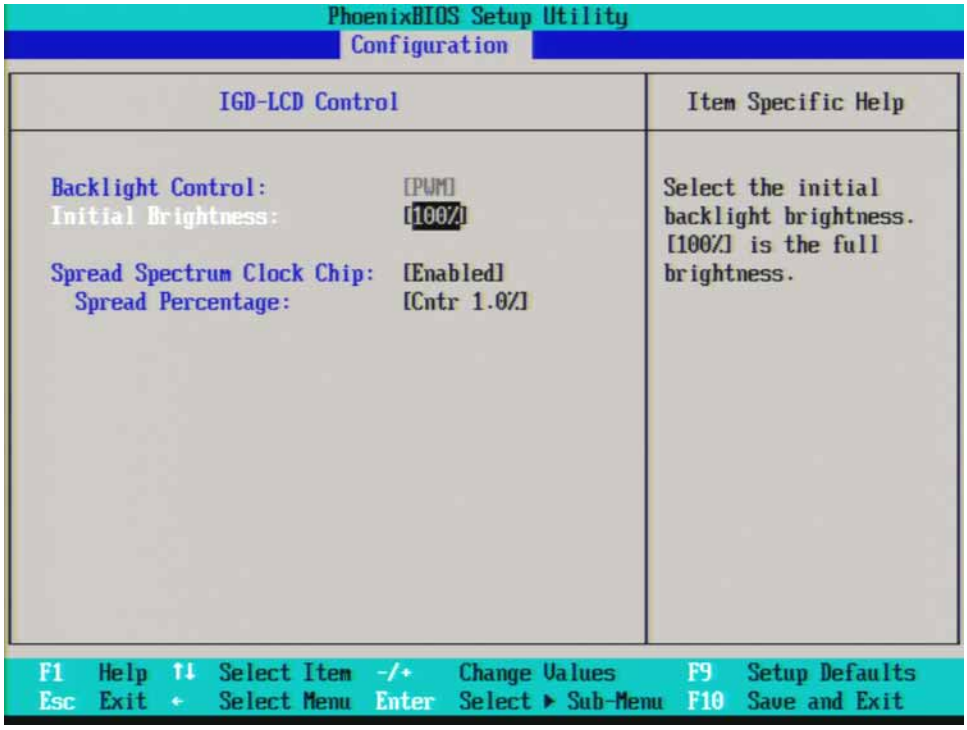

Figure 11-10 BIOS Setup Utility - Configuration > USB

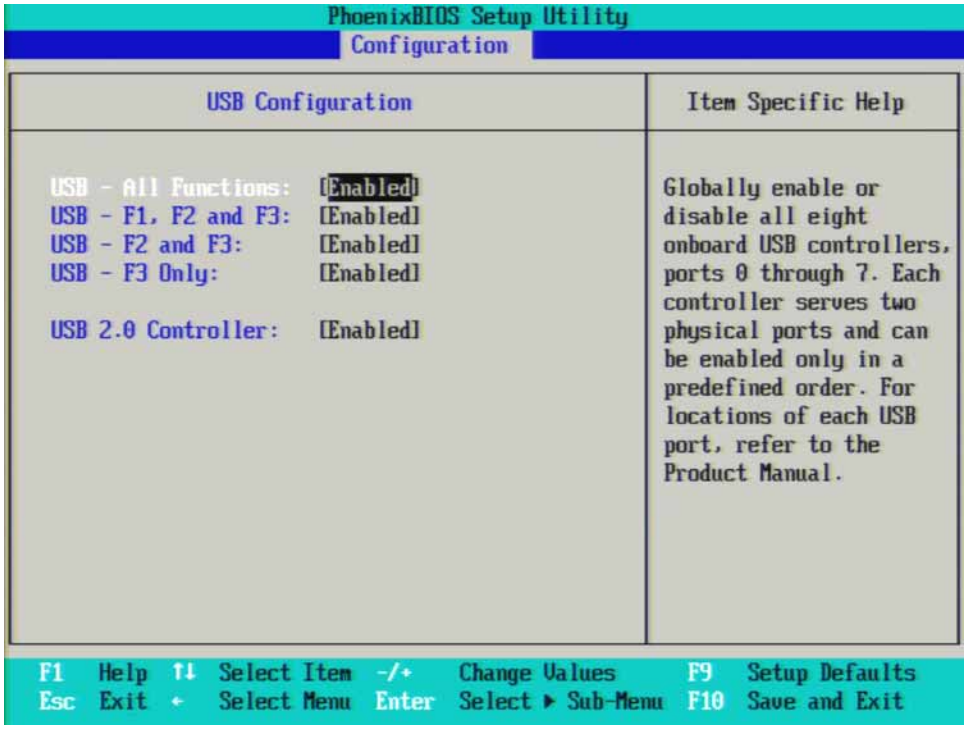

Figure 11-11 BIOS Setup Utility - Configuration > LAN

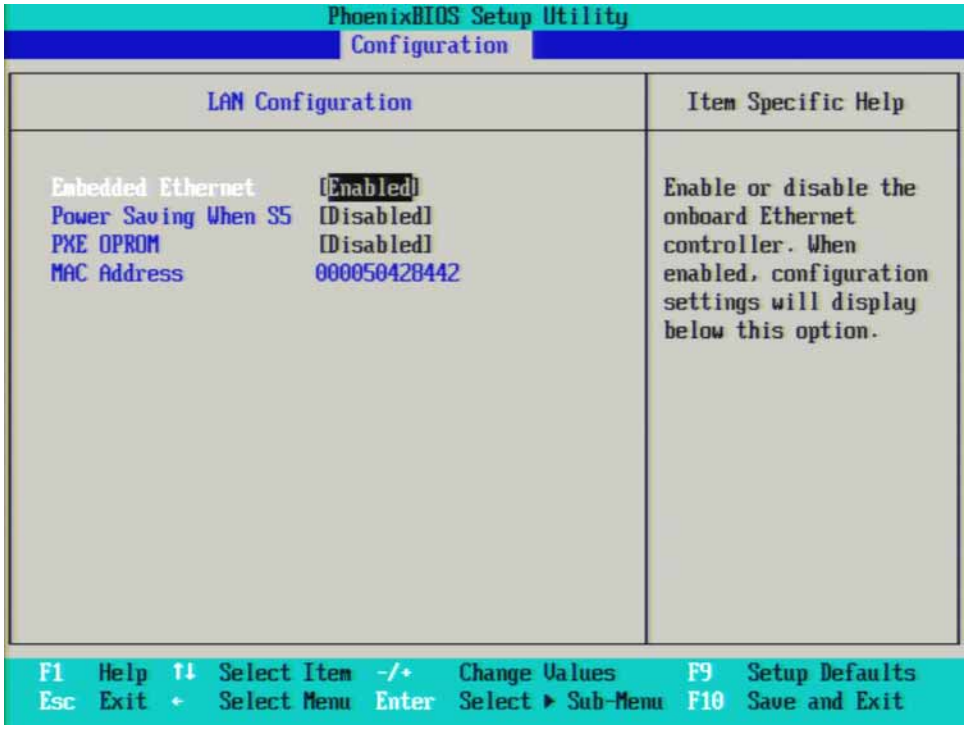

Figure 11-12 BIOS Setup Utility - Configuration > PCI Expansion Slot

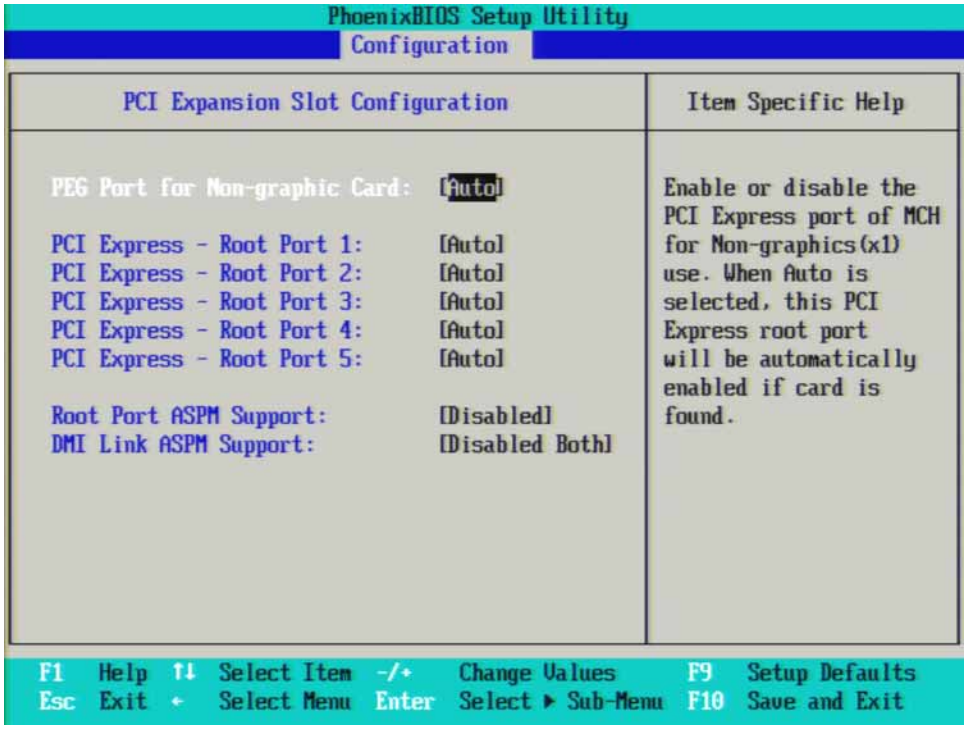

Figure 11-13 BIOS Setup Utility - Configuration > Power Control

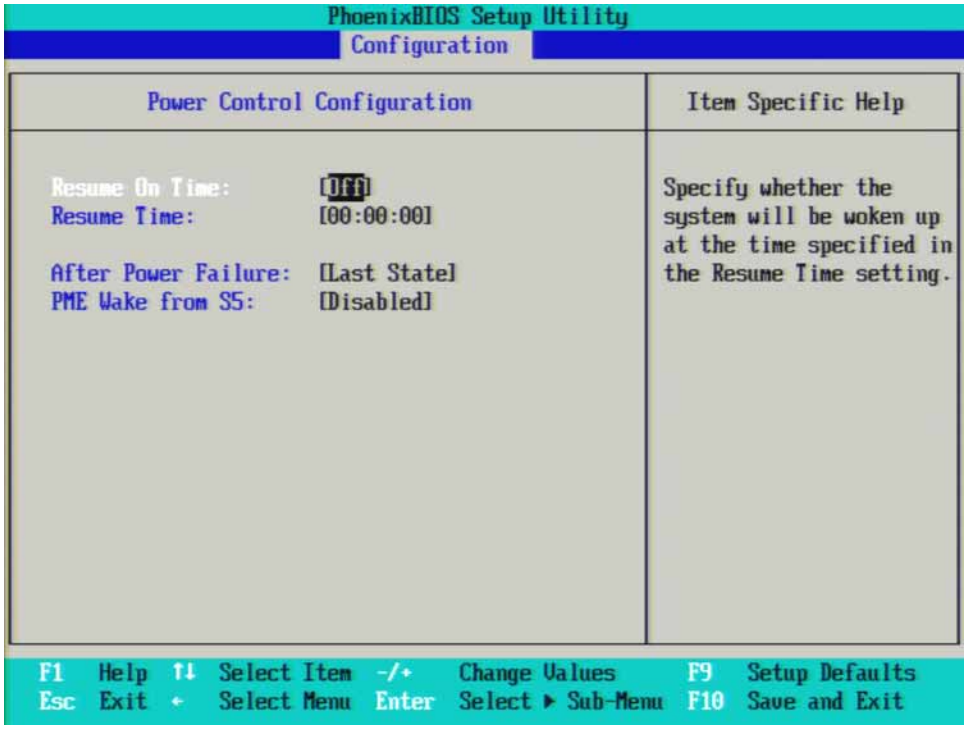

Figure 11-14 BIOS Setup Utility - Configuration > Security

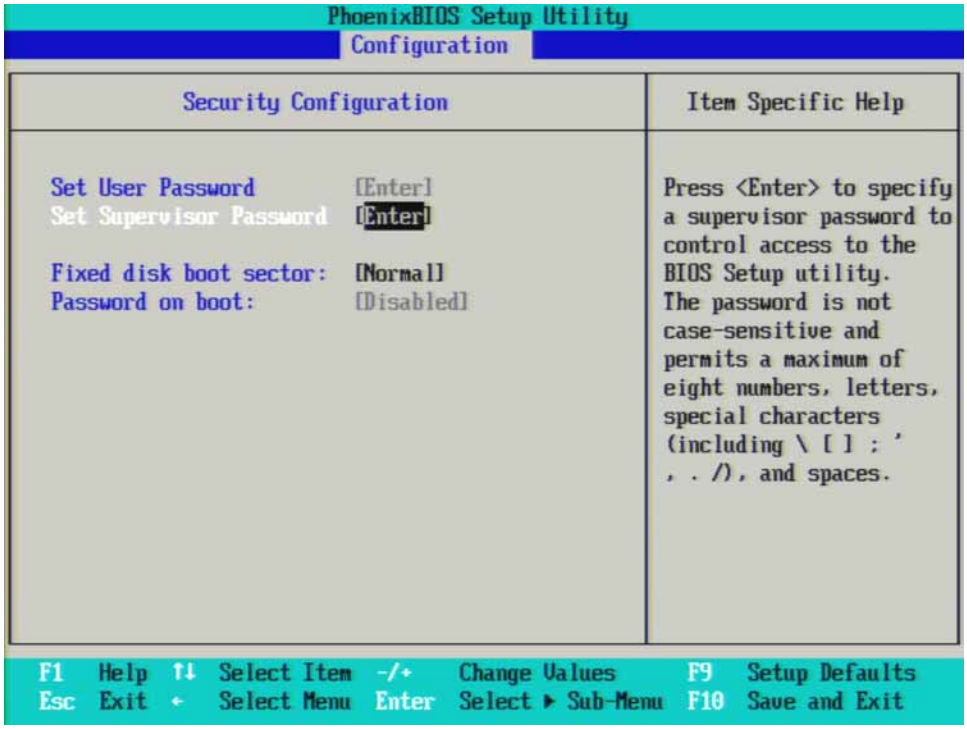

Figure 11-15 BIOS Setup Utility - Configuration > CPU

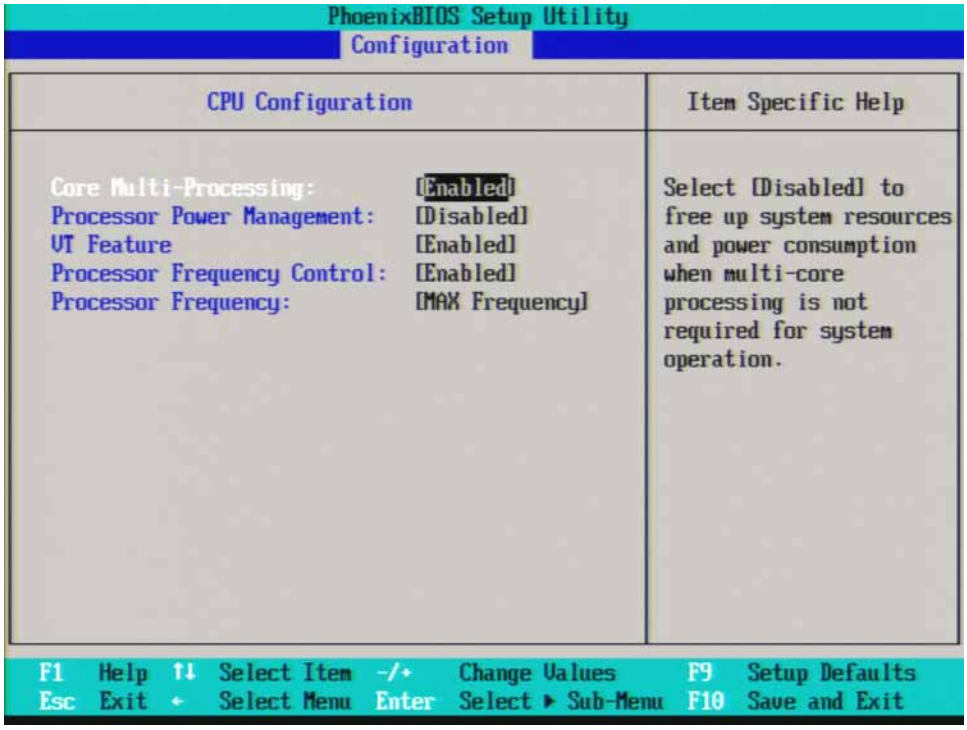

Figure 11-16 BIOS Setup Utility - Configuration > Advanced

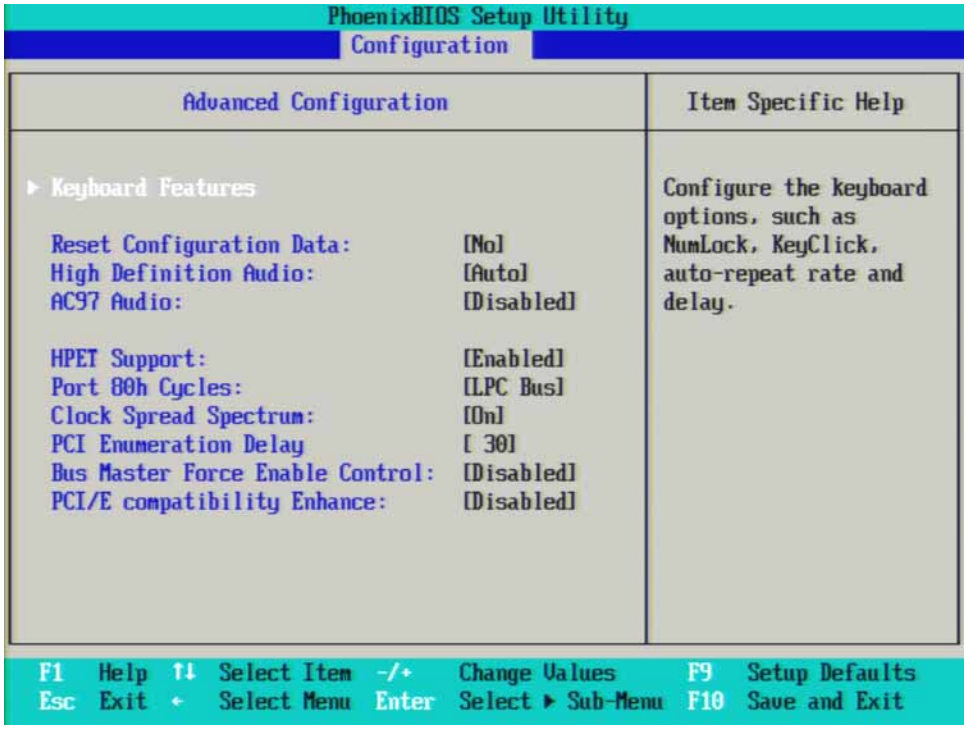

Figure 11-17 BIOS Setup Utility - Configuration > Advanced > Keyboard Features

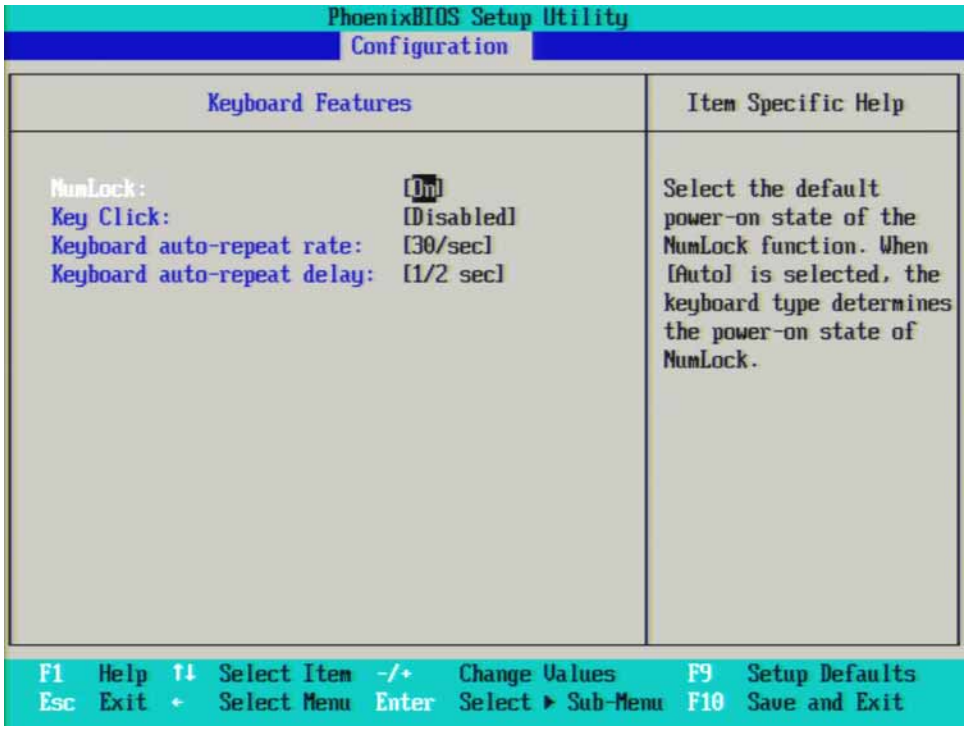

Figure 11-18 BIOS Setup Utility - Boot

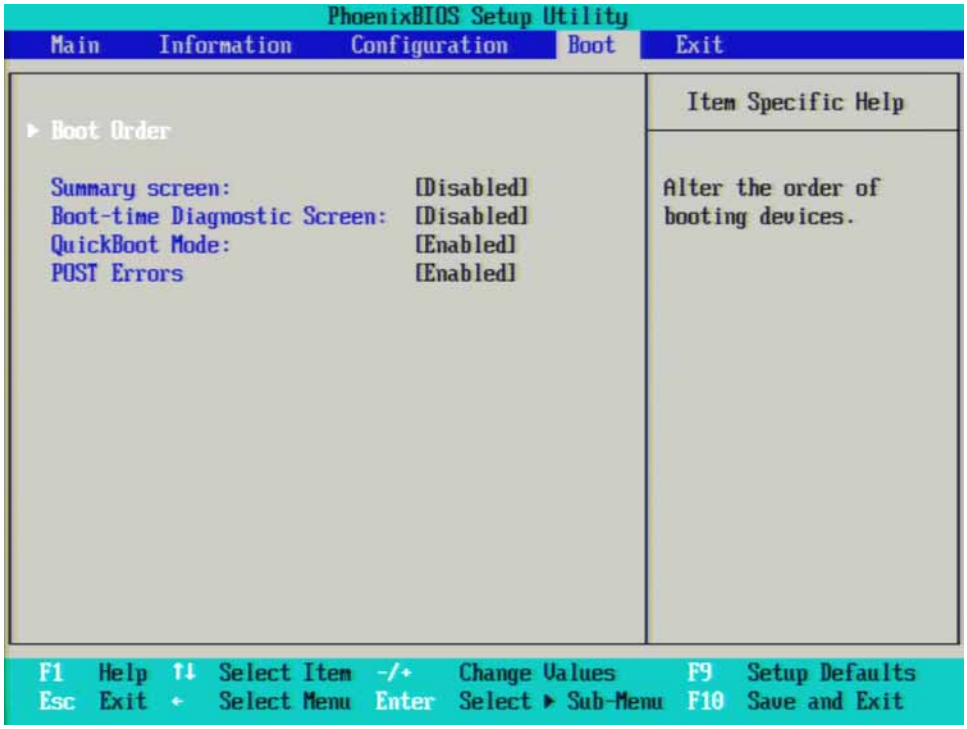

Figure 11-19 BIOS Setup Utility - Boot > Boot Order

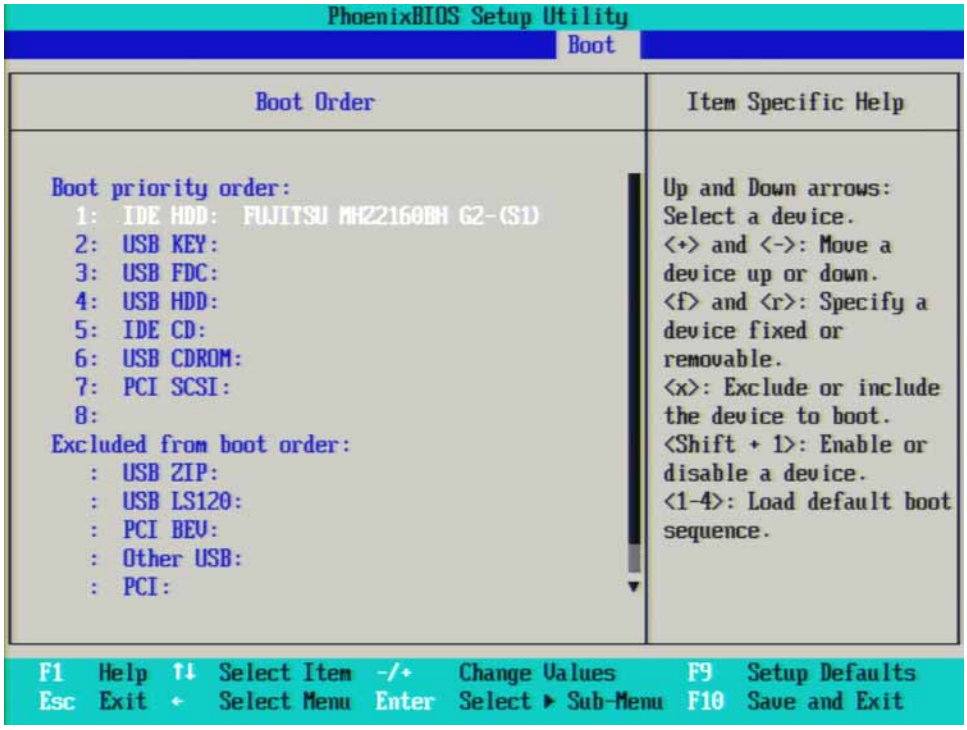

Figure 11-20 BIOS Setup Utility - Exit

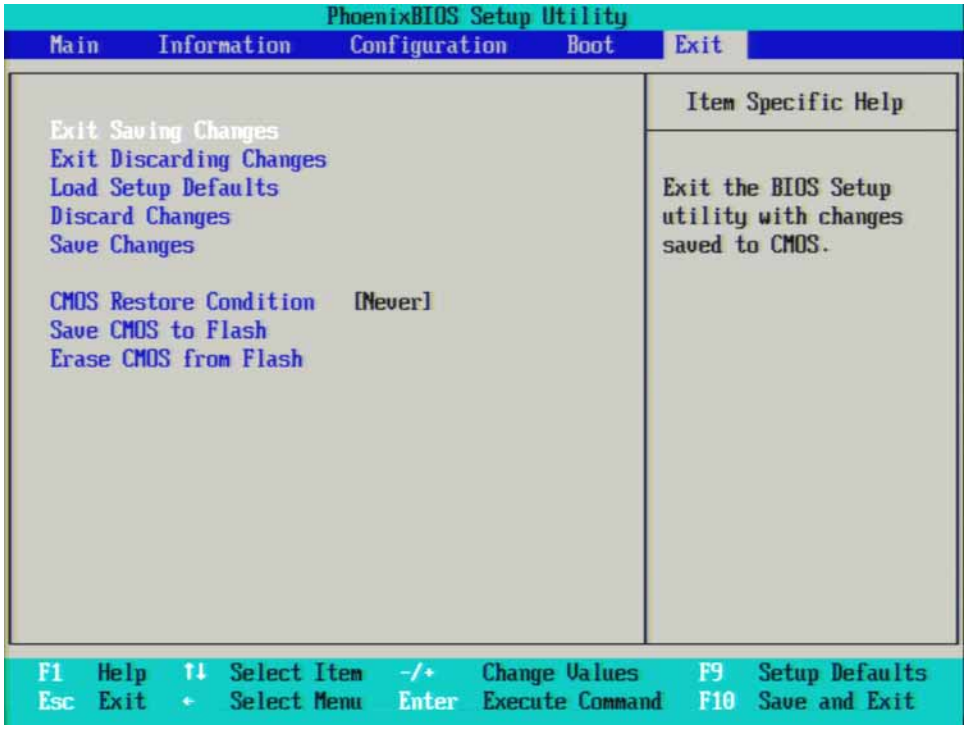

A5 Disk Drive

There are two different types of A5 Disk Drives available. The standard drive is a typical hard disk drive, while the option SSD drive is a solid state (FLASH) drive. There are different drive capacities being used, and due to continual changes being made by the drive manufacturers these will continue to change from time to time.

Failures of this disk drive can be either hardware or software related. The first step in troubleshooting is to determine if the failure is software related. If software is found not to be the issue, the disk drive should be replaced.

NOTE

Before replacing the A5 disk drive it is highly recommended that the factory calibration data be backed up to an external drive if at all possible. If this data is not backed up prior to replacing the disk drive all instrument adjustments and performance verification tests will need to be run after the drive is replaced.

For information on how to backup this data see the "Calibration Data Backup and Restore" section in Chapter 19, "Post-Repair Procedures," of this manual.

Overview

The A5 Disk Drive assembly has been divided up into four different partitions. They are:

Table 11-1

C. This partition contains the operating system and software installed by Keysight. This is an open system which means you can install additional software, which should be installed on the C: drive. However, only a limited set of software applications are tested for use with the instrument software. The installation and/or use of other software is not warranted, and could interfere with the operation of the instrument software. If the Keysight Recovery process is ever run, the original version of the C: drive, as shipped from the factory, will be restored. The user will need to reload any other software that was previously installed into the instrument.

Do not save any user data to the C: drive partition, as any data saved in this partition will be lost if the Keysight Recovery process is run.

D. This partition is reserved for data storage. The User Accounts that are preconfigured by Keysight and their My Documents folder are mapped to the D: drive. This is for the convenience of backing-up the user data. You should always back-up the data on the D: drive. This allows you to restore the data if the A5 Disk Drive assembly ever needs to be replaced.

Data saved in this partition will not be lost if the Keysight Recovery process is run.

E. This partition is reserved for Keysight's use. The primary use of the E: drive is for storing of the instrument Calibration and Alignment data. Do not change or overwrite the files on this drive. This could cause your instrument to not meet specifications, or even to stop functioning correctly. It is also recommended that you back up the contents of this drive. This allows you to restore the data if the A5 Disk Drive assembly ever needs to be replaced, which could otherwise require that all instrument adjustments be performed.

While data saved in this partition will not be lost if the Keysight Recovery process is run, do not use this drive for data storage.

In addition, a hidden recovery partition is located on the drive. This partition contains an image of the C: drive as it was when the instrument was shipped from the factory. To restore the C: drive using the image stored in this recovery partition see the section titled “Instrument Image Recovery Process” on page 298.

Troubleshooting software related issues

The C: drive contains the Windows operating system software and the X-Series software. Boot problems can be caused by either a failure of the Windows operating system or the X-Series software. The failure could have occurred due to a failed installation procedure, X-Series software update failure or a virus.

To correct these issues there are two procedures that can be initiated to resolve a software related issue.

- Reload the X-Series software.
- Use the Recovery Process to reinstall the Windows operating system and X-Series software as it was when it left the factory.

Reloading the X-Series Software

The X-Series software contains all the required components for the signal analyzer application as well as all software options. If the X-Series software has become corrupt the Windows operating system will boot but the X-Series software application will fail to start. In these cases go to Chapter 21, "Instrument Software." for information on how to update the X-Series software. This procedure will not affect the instrument's calibration or user files.

If this does not resolve the boot issue, or the instrument never boots the Windows operating system proceed to the "Instrument Image Recovery Process".

Instrument Image Recovery Process

The Instrument Image Recovery System can be used to repair errors on the instrument's C: drive partition or to restore the original factory configuration of the system software. The Instrument Image Recovery System is stored in a separate hidden hard disk drive partition.

Repairing errors on the hard disk drive may result in loss of data or files. If you need more information about the Windows “chkdsk” error repair process, see the chkdsk documentation in the Microsoft Windows Help and Support Center.

Restoring the original factory system software does not restore any of the following items:

- Windows system configurations that were made after the instrument was shipped from the factory. For example, Windows and Service Pack updates, user accounts, and windows configuration settings. After an Keysight Recovery, these configurations need to be redone.
- Additional software that was installed after the instrument was shipped from the factory. After an Keysight Recovery, that software needs to be re-installed.
- Any data or programs saved on the D: or E: drives.
- Any upgrades that were made to the Keysight measurement application software.

Restoring the original factory system software will not synchronize the code in the Field Programmable Gate Arrays (FPGAs) on the various hardware assemblies. As a result, you may see an error dialog box appear during the final boot-up at the end of the recovery process. This typically occurs when there are significant differences between the software version installed prior to performing the recovery and the version restored by the recovery. In these situations, upgrade the software to the latest version.

Calibration data is not lost during this process because it resides on the E drive partition.

Table 11-2 Using the instrument recovery system

Step	Notes
1. Make sure the instrument is turned off.	
2. Turn on the instrument. – Press the down arrow key to move the highlight to **Keysight Recovery System**, then press **Enter**.	After the Keysight Technologies screen is displayed, This screen is displayed for five seconds. 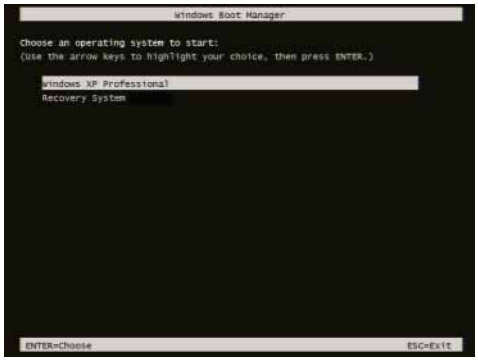
3. When the Keysight Recovery System has booted, follow the on-screen instructions to recover the image of the C: drive. – Press **2**, then press **Enter** to select the recovery.	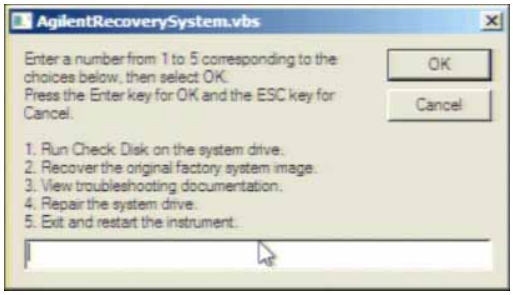
4. A warning message appears. – Press **Enter** to start the recovery, which may take up to 25 minutes to complete.	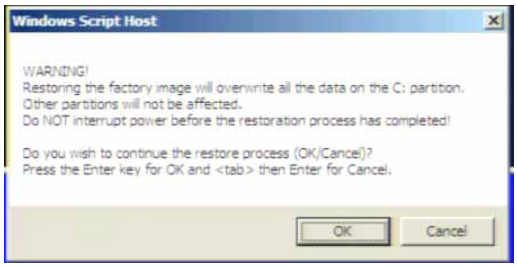

After exiting the Keysight Recovery System, the instrument reboots.

Update the X-Series software to the latest version by downloading it from the following URL:

www.keysight.com/find/xseries_software

Replacing the instrument disk drive

If the above two procedures did not resolve the booting issue. The disk drive should be replaced. Please refer to the “Disk Drive” replacement section on page 534.

12 Power Supply/Midplane

What You Will Find in This Chapter

The following information is presented in this chapter:

1. Theory of operation of the Power Supply/Midplane section.
2. Isolating the cause of a hardware problem by verifying the functionality of assemblies in the Power Supply and Midplane sections.

NOTE Each of the following sections first describes how the assembly works, then gives information to help you troubleshoot the assembly. Each description explains the purpose of the assembly, describes the main components, and lists external connections to the assembly.

This following descriptions are found in this chapter:

A6 Power Supply Description on page 302

A6 Power Supply Assembly Troubleshooting on page 306

A7 Midplane Assembly Description on page 309

A7 Midplane Assembly Troubleshooting on page 312

A6 Power Supply Description

Purpose

The A6 Power Supply assembly provides most all the necessary DC voltages for the entire PXA signal analyzer to operate correctly. If any of the power supplies are not within their operating voltages, the analyzer will not function properly. The power supply outputs provide power to all the printed circuit boards, microcircuit assemblies, front panel display and fans, any of which can cause an over current condition if not operating correctly. The power supply will remain on in an over current state for a minimum of 1 second. The power supply will turn off no later than 5 seconds after the beginning of the over current state. Any one output over current condition will latch the supply off until the line voltage is removed from the rear panel AC power input connector and then reconnected. The power supply assembly plugs into the A7 Midplane Assembly from the rear of the instrument. (see Figure 12-1.)

Figure 12-1 Power Supply and Midplane

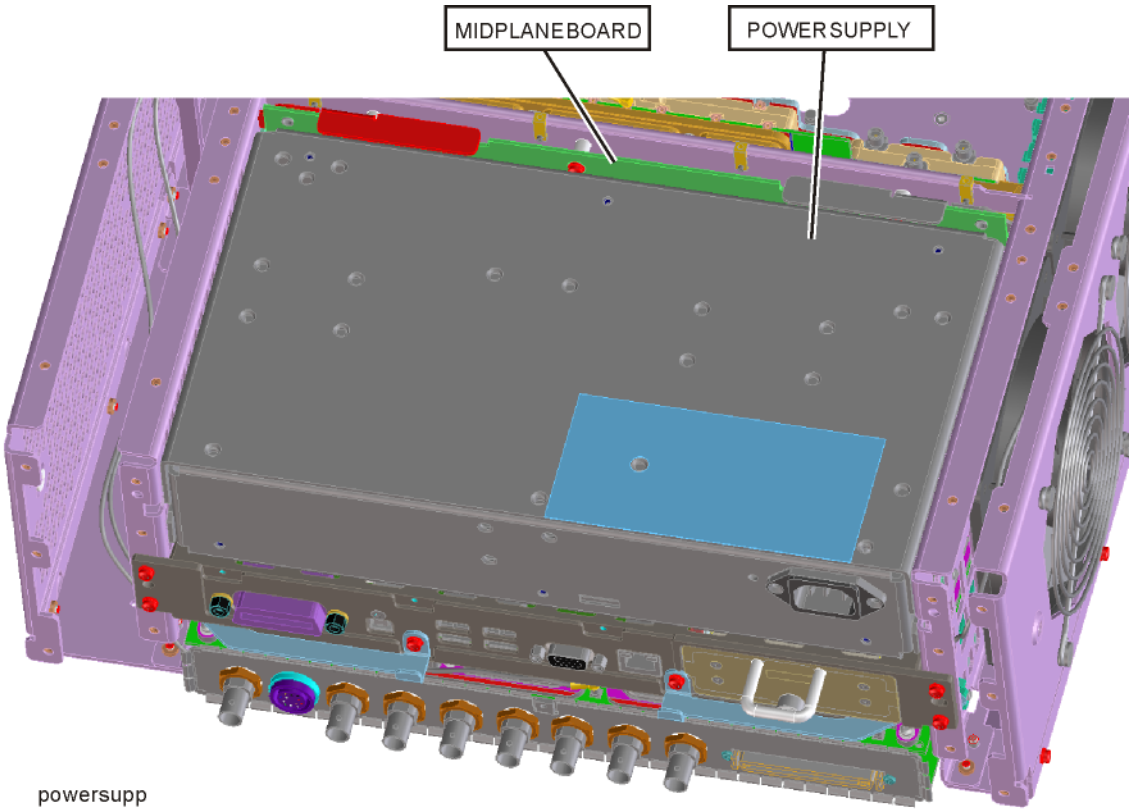

Power Supply Theory of Operation

The A6 Power Supply assembly is serviced as an assembly only; no component level repair is supported.

The A6 Power Supply assembly provides most all of the necessary DC voltages for the PXA. If any of the power supplies are not within their operating voltages, the instrument will not function properly.

The A6 Power Supply assembly is a switching supply that operates at a frequency of ~130 kHz.

The A6 Power Supply assembly is an auto ranging supply, requiring no user selection of the input voltage. The input AC voltage and frequency requirements for the A6 Power Supply assembly are printed on the rear panel of the instruments as well as on the power supply itself.

While there are no test points or status LEDs accessible for troubleshooting on the A6 Power Supply assembly, there are both test points and status LEDs for all of the different power supply voltages, as well as other power supply status lines, on the A7 Midplane Board. See the "A7 Midplane Assembly Description" on page 309 for detailed information on the location of each

Supply Voltages

The following voltage levels are produced by the A6 Power Supply assembly:

Table 12-1

Supply Name	Description	Referenced To
+32VA	+32 Volt Analog Supply	ACOM
+15VA	+15 Volt Analog Supply	ACOM
+15VSB	+15 Volt Standby Supply	ACOM
+9VA	+9 Volt Analog Supply	ACOM
+5.1VA	+5.1 Volt Analog Supply	ACOM
-7VA	-7 Volt Analog Supply	ACOM
-15VA	-15 Volt Analog Supply	ACOM
+12VD	+12 Volt Digital Supply	DCOM
+5.1VD	+5.1 Volt Digital Supply	DCOM
+5.1VSB	+5.1 Volt Standby Supply	DCOM
+3.35VD	+3.35 Volt Digital Supply	DCOM
FAN_P	Fan Positive Supply	FAN_N
FAN_N	Fan Negative Supply	FAN_P

Control Inputs

There are a number of control inputs for the A6 Power Supply assembly. The ones that you will want to be familiar with are:

POWER_ON_L

is a signal that when pulled low tells the A6 Power Supply assembly to turn on all of its outputs. This signal comes from the A4 CPU board assembly and is initiated by pressing the front panel power button.

DITHER

is an AC coupled analog signal going to the supply that is used to frequency modulate the power supply switching frequency for the purpose of lowering any power supply related interference. The DITHER signal is generated on the A7 Midplane board.

Control/Status Outputs

There are a number of control and status outputs for the A6 Power Supply assembly. The ones that you will want to be familiar with are:

POWER_OK

is used to verify that the +12VD, +5.1VD, and +3.35VD are all on and within specification. A TTL high level on this output brings the CPU out of reset and initiates the instrument boot up process.

LINE_TRIGGER

is a TTL level signal that is synchronous to the AC line input. This signal is typically used in spectrum analyzers to trigger an instrument sweep synchronous to the AC power line.

FAULT_L

will be a TTL low level signal to indicate that the supply is experiencing an over voltage, over current, or over temperature condition.

Fuse

The A6 Power Supply has no user replaceable fuse. While there is a fuse internal to the supply this is not meant for field replacement. If the internal fuse is blown, the power supply has experienced a major failure and should be replaced.

Standby Supplies

The A6 Power Supply assembly has two standby supplies that should always be on if the AC input voltage requirements are met. These are the +15VSB and the +5.1VSB supplies. These supplies are used by the instrument to keep certain circuits alive even when the power is turned off.

Over Current Protection

The A6 Power Supply assembly has built in over current protection that will shut down the supply if current draw from the instrument is too great. The power supply will remain on in over current state for a minimum of 1 second. The power supply shall turn off no later than 5 seconds after the beginning of the over current state. The power supply shall remain off until the line voltage is removed and then reconnected or the front panel power switch is cycled. Over current shut down does not apply to the standby supplies, the fan voltage, and the +32VA supply.

Thermal Protection

The A6 Power Supply assembly will protect itself by shutting down if it overheats. It will also reset itself with no user interaction after the temperature is reduced by approximately 10 degrees C.

A6 Power Supply Assembly Troubleshooting

The A6 Power Supply assembly is serviced as an assembly only; no component level repair is supported.

NOTE

The A6 Power Supply has no user replaceable fuse. While there is a fuse internal to the supply this is not meant for field replacement. If the internal fuse is blown, the power supply has experienced a major failure and should be replaced.

If the instrument will not boot up properly, or the display is not turning on, refer to the "Instrument Boot Up Process" on page 35 before further A6 Power Supply troubleshooting to rule out any other assembly as the cause of the failure.

Supply Voltages

While there are no test points or status LEDs accessible for troubleshooting on the A6 Power Supply assembly, there are both test points and status LEDs for all of the different power supply voltages, as well as other power supply status lines, on the A7 Midplane board. See the A7 Midplane Board Assembly section in this chapter for detailed information on the location of each.

Control Inputs

POWER_ON

POWER_ON is a signal that when pulled low tells the A6 Power Supply assembly to turn on all of its outputs. This signal comes from the A4 Processor board assembly and is initiated by pressing the front panel power button.

If the instrument will not turn on be sure that this line is being pulled low by either measuring the voltage level at Test Point 518 on the A7 Midplane board assembly or by viewing the status of the POWER_ON_L LED. See the "A7 Midplane Assembly Troubleshooting" on page 312 for detailed information on the location of this test point and LED as well as the expected status for both when the instrument is operating properly.

Status Outputs

POWER_OK

The POWER_OK status output is an indication of whether or not all of the digital power supply voltages are up to their specified voltage levels or not. If all of these supplies are working properly this output line will be at a TTL high level. If this output is not at a TTL High level the instrument CPU will not come out of its reset state and will not boot-up. Once this output goes to a TTL high level the instrument CPU will start its boot-up process and the POWER_ON_L line coming from the A4 Processor assembly will go to a TTL low level which will tell the A6 Power Supply assembly to turn on the rest of it output voltages.

If the A6 Power Supply assembly is suspected of causing the instrument to not power on properly the status of this output can be verified by either measuring the voltage level at Test Point 506 on the A7 Midplane board assembly or by viewing the status of the POWER_OK LED. See the A7 Midplane Board Assembly Troubleshooting section in this chapter for detailed information on the location of this test point and LED as well as the expected status for both when the instrument is operating properly.

FAULT_L

The FAULT_L status output is an indication of whether or not there is a fault detected by the A6 Power Supply that is keeping it from powering on properly. If all of the required conditions to turn the A6 Power Supply assembly on properly are being met this status output line will be at a TTL high level. The conditions that could cause this status output line to be at a TTL low level include that of an over current condition, an over voltage condition, and an over

temperature condition. However, there is no way to know at the A6 Power Supply assembly level which one of these conditions may be the cause of a TTL low level to be on the FAULT_L status output.

While any over voltage or over temperature conditions will most likely be caused by an A6 Power Supply assembly failure, an over current condition will most likely be caused by another assembly in the instrument demanding too much current.

If this output is not at a TTL high level the A6 Power Supply assembly will not turn its non-standby power supplies on, no matter what the A4 Processor assembly tells it to do.

If the A6 Power Supply assembly is suspected of causing the instrument to not power on properly the status of this output line can be verified by either measuring the voltage level at Test Point 508 on the A7 Midplane board assembly or by viewing the status of the FAULT_L LED. See the A7 Midplane Board AssemblyTroubleshooting section in this chapter for detailed information on the location of this test point and LED as well as the expected status for both when the instrument is operating properly.

A7 Midplane Assembly Description

The A7 Midplane board is used to connect the A4 Processor board assembly and the A6 Power Supply assembly to the A8 Motherboard, and thus the rest of the instrument electrical assemblies.

In addition, the A7 Midplane board also provides the following functions:

- Instrument power supply voltage test points and status LEDs
- +3.3V analog linear power supply regulation (+3.3VA)
- -5.2V analog linear power supply regulation (-5.2VA)
- Non-volatile memory for storage of the instrument model number, serial number, and software license keys (Secure Storage).
- Power supply dithering. A triangle wave of approximately 100 Hz is generated and goes directly to the A6 Power Supply assembly. This is used to frequency modulate the power supply switching frequency for the purpose of lowering any power supply related interference.
- Circuitry to phase lock the A4 Processor assembly CPU clock to the instrument reference frequency.

Midplane Board Connections

Table 12-2

Connector	Connects To	Connector	Connects To
J101	A6 Power Supply Assembly	J111	A6 Power Supply Assembly
J102	A6 Power Supply Assembly	J112	A6 Power Supply Assembly
J103	A6 Power Supply Assembly	J201	A4 Processor Assembly
J104	A6 Power Supply Assembly	J202	A4 Processor Assembly
J105	A6 Power Supply Assembly	J203	A4 Processor Assembly
J106	A6 Power Supply Assembly	J204	A4 Processor Assembly
J107	A6 Power Supply Assembly	P1	A8 Motherboard Assembly
J108	A6 Power Supply Assembly	P2	A8 Motherboard Assembly
J109	A6 Power Supply Assembly	P3	A8 Motherboard Assembly
J110	A6 Power Supply Assembly	P13	A8 Motherboard Assembly

Figure 12-2 A7 Midplane Board Connections

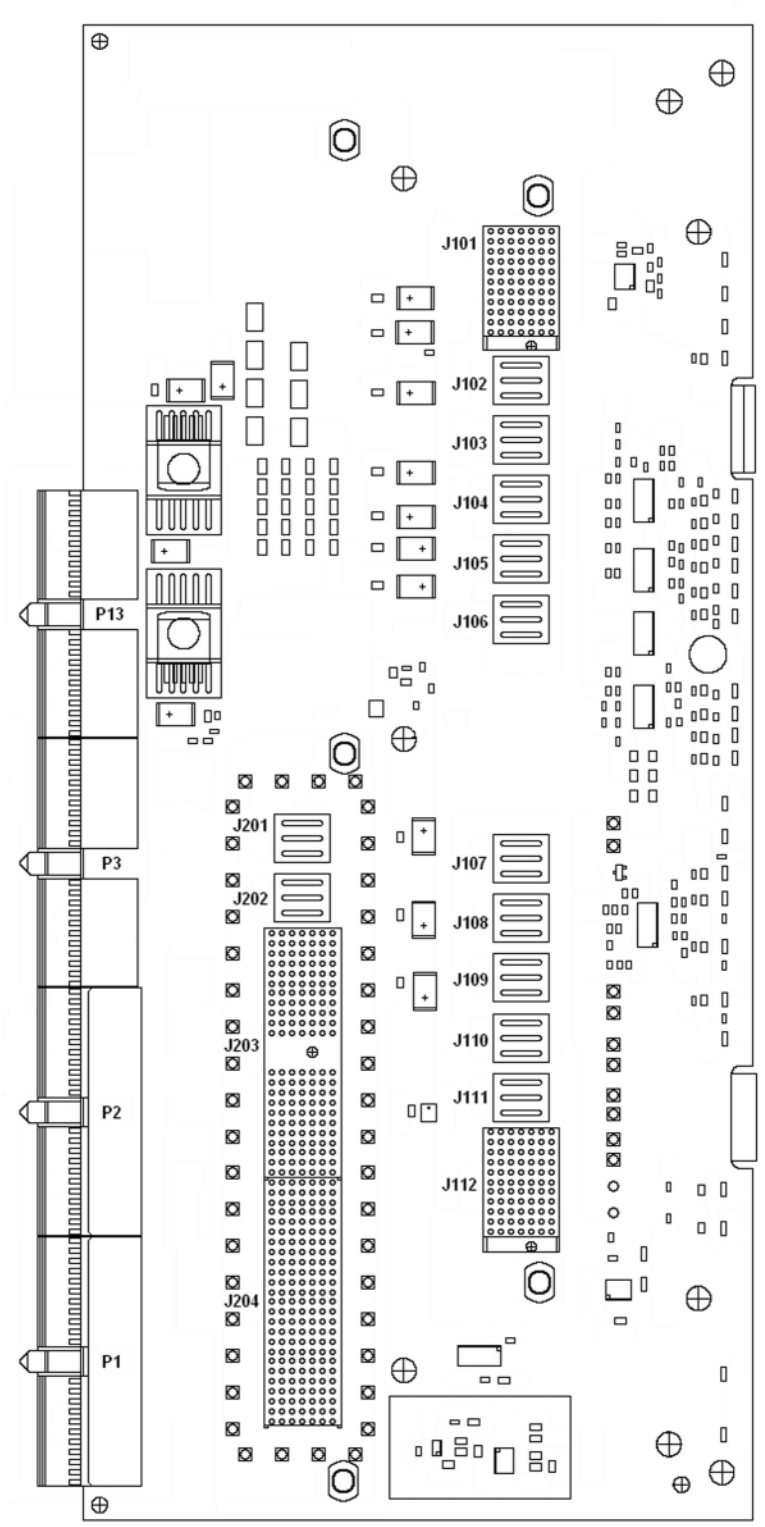

A7 Midplane Assembly Troubleshooting

The A7 Midplane board is serviced as an assembly only; no component level repair is supported.

Instrument Power Supply LEDs and Test Points

While the A6 Power Supply assembly has no user accessible LEDs or test points the A7 Midplane board does provide these for all of the different instrument power supplies as well as many of the power supply status lines. A complete list of these can be found in Table 12-3 and the location of each can be seen in Figure 12-3.

Additional Power Supply Regulation

There are two analog power supply regulators on the A7 Midplane board. They are the +3.3VA and -5.2VA supplies.

The +3.3VA supply is regulated down from the instrument +5.1VA supply while the -5.2VA supply is regulated down from the -7VA instrument supply.

Both of these supply voltages have test points and LEDs on the A7 Midplane board as seen in Figure 12-3.

Instrument Secure Storage

This is Non-volatile storage of instrument model number, serial number, and software license keys. While the license keys are also contained on the C: drive of the instrument, the model and serial numbers are only saved in this secure memory. There is no way for the user to access this memory in any way. This is reserved for the factory and field software when needed for instrument initialization, as well as the instrument software when installing an option license key. If for some reason any of these cannot be remembered by the instrument there could be a problem with this memory and the A7 Midplane board would need to be replaced.

Power Supply Dithering

A triangle wave of approximately 100 Hz is generated and goes directly to the A6 Power Supply assembly. This is used to frequency modulate the power supply switching frequency for the purpose of lowering any power supply related interference.

If for some reason the level of the power supply related interference is higher than normal this circuitry, or the A6 Power Supply assembly, could be suspect.

Table 12-3 A7 Midplane Board LEDs and Test Points

Supply/ Signal	Description	Referenced To	Generated On	Expected Status			
				Power Off[a]		Power On	
				LED	Test Point (VDC)	LED	Test Point (VDC)
+32VA	+32 Volt Analog Supply	ACOM	A6	Red	0	Off	+32 ± 2.0
+15VA	+15 Volt Analog Supply	ACOM	A6	Red	0	Off	+15 ± 1.0
+15VSB	+15 Volt Standby Supply	ACOM	A6	Green	+15 ± 1.0	Green	+15 ± 1.0
+9VA	+9 Volt Analog Supply	ACOM	A6	Red	0	Off	+9 ± 1.0
+5.1VA	+5.1 Volt Analog Supply	ACOM	A6	Red	0	Off	+5.1 ± 0.75
-7VA	-7 Volt Analog Supply	ACOM	A6	Red	0	Off	-7 ± 1.0
-15VA	-15 Volt Analog Supply	ACOM	A6	Red	0	Off	-15 ± 1.0
+12VD	+12 Volt Digital Supply	DCOM	A6	Red	0	Off	+12 ± 1.0
+5.1VD	+5.1 Volt Digital Supply	DCOM	A6	Red	0	Off	+5.1 ± 0.75
+5.1VSB	+5.1 Volt Standby Supply	DCOM	A6	Green	+5.1 ± 0.75	Green	+5.1 ± 0.75
+3.35VD	+3.35 Volt Digital Supply	DCOM	A6	Red	0	Off	+3.35 ± 0.75
FAN_P	Fan Positive Voltage	ACOM	A6	Red	0	Off	9.2 - 14.5
+3.3VA	+3.3 Volt Analog Supply	ACOM	A7	Red	0	Off	+3.35 ± 0.75
-5.2VA	-5.2 Volt Analog Supply	ACOM	A7	Red	0	Off	-5.2 ± 0.75
FAULT_L	Power Supply Fault	ACOM	A6	Off	TTL High	Off	TTL High

Table 12-3 A7 Midplane Board LEDs and Test Points

Supply/ Signal	Description	Referenced To	Generated On	Expected Status			
				Power Off[a]		Power On	
				LED	Test Point (VDC)	LED	Test Point (VDC)
POWER_OK	Digital Supplies OK	DCOM	A6	Red	TTL Low	Off	TTL High
POWER_ON_L	Power Supply Enable	DCOM	A4	Off	TTL High	Green	TTL Low
POWER_SW_L	Power Switch Pressed	ACOM	A4	n/a	TTL High	Green	TTL High[b]

a. With AC mains connected to the instrument
b. POWER_SW_L should only be at a TTL Low state when the front panel power switch is being pressed

Figure 12-3 A7 Midplane Board Assembly LEDs and Test Points

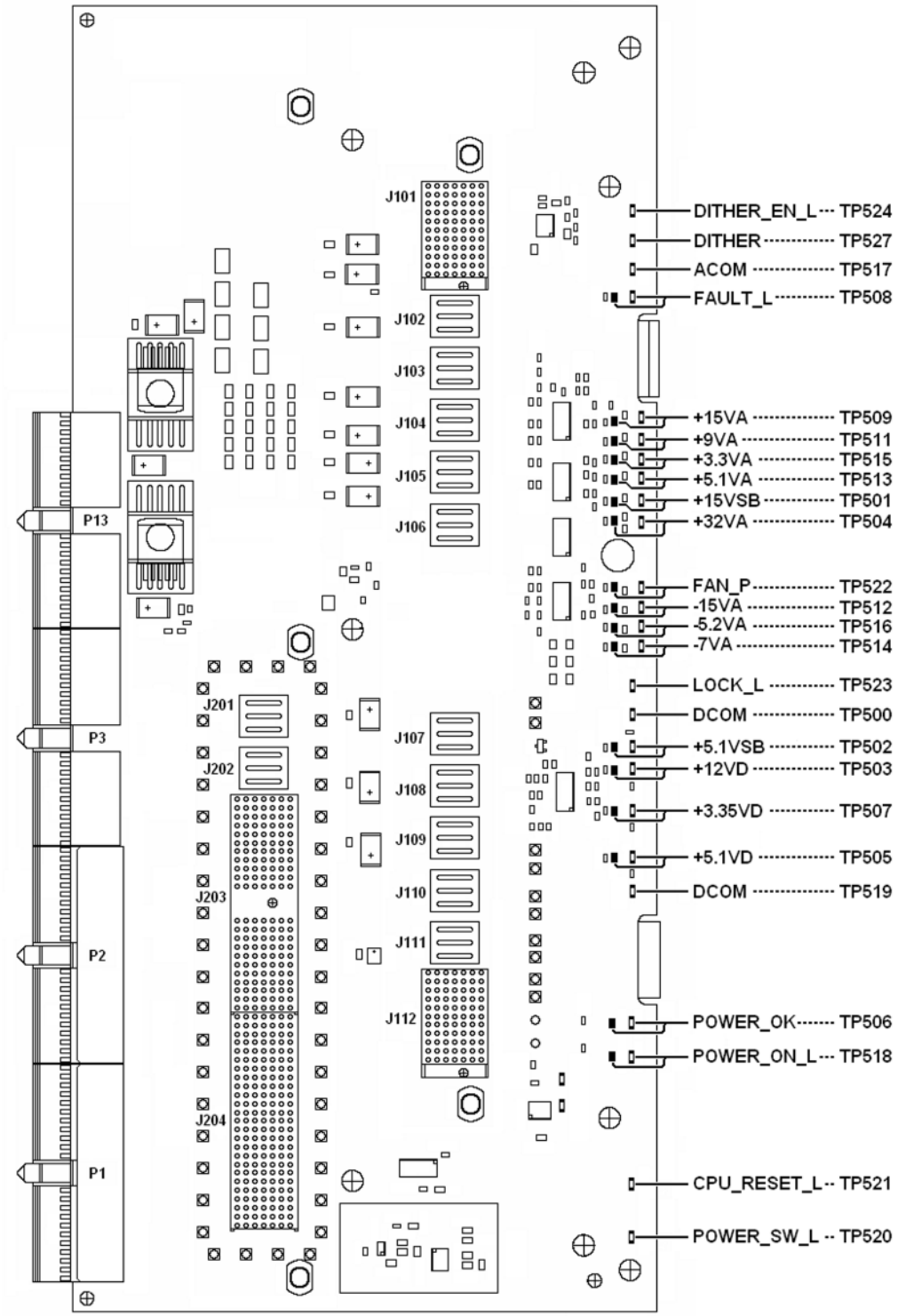

13 Front Panel/Motherboard

What You Will Find in This Chapter

The following information is found in this chapter:

1. Theory of operation of the Motherboard Assembly.
2. Theory of operation of the Front Panel Assembly.
3. Isolating the cause of an hardware problem by verifying the functionality of assemblies.

This following descriptions are found in this chapter:

A8 Motherboard Description page 318

A1 Front Panel Assembly page 321

A8 Motherboard Description

Purpose

The Motherboard is an electrical link between many of the electrical assemblies in the instrument. The main functions of this PC board include:

- Distribute power
- Control and common signals between all the measurement PC boards including the A7 Midplane and the Front Panel Assembly
- Circuitry for fan speed control
- 10 MHz Reference distribution

Figure 13-1 Motherboard

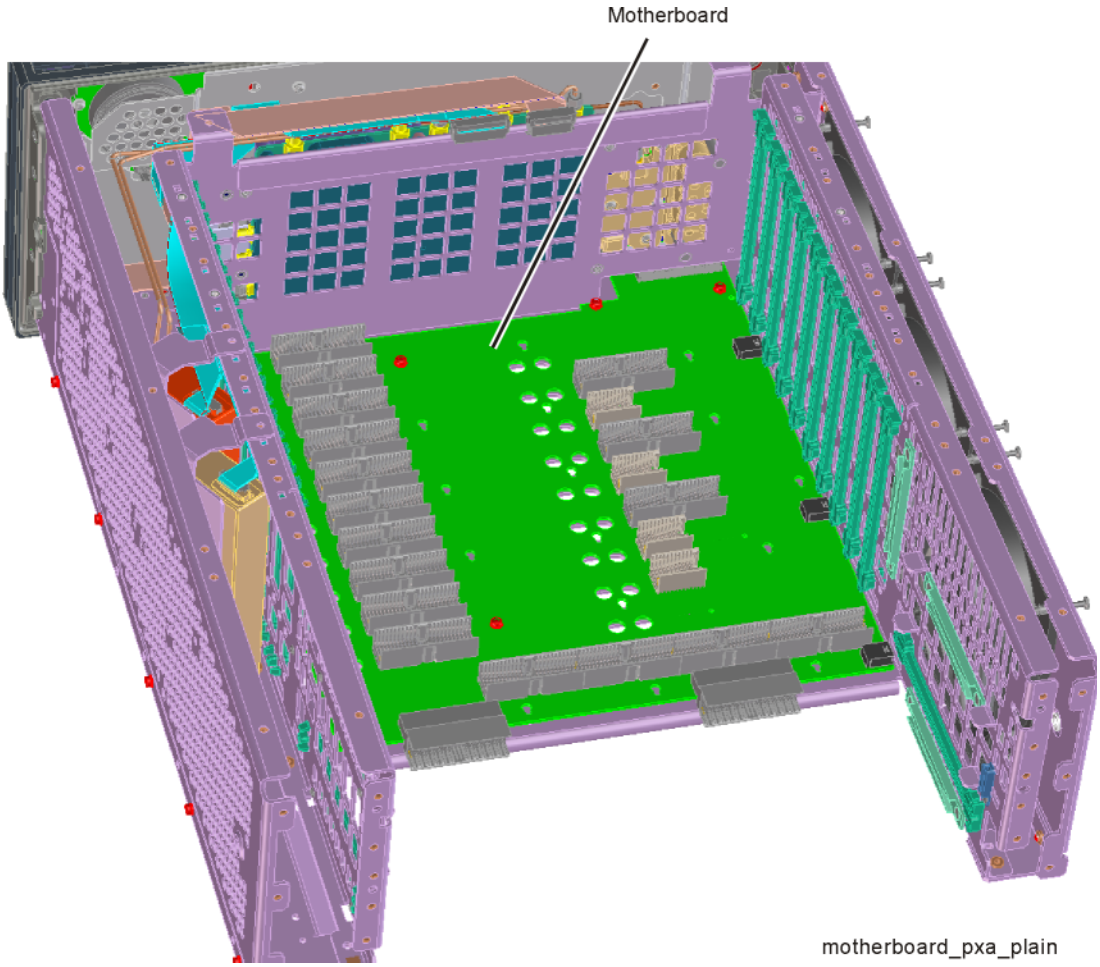

The Motherboard is horizontally mounted, located near the bottom of the analyzer.

Figure 13-2 Motherboard Connectors

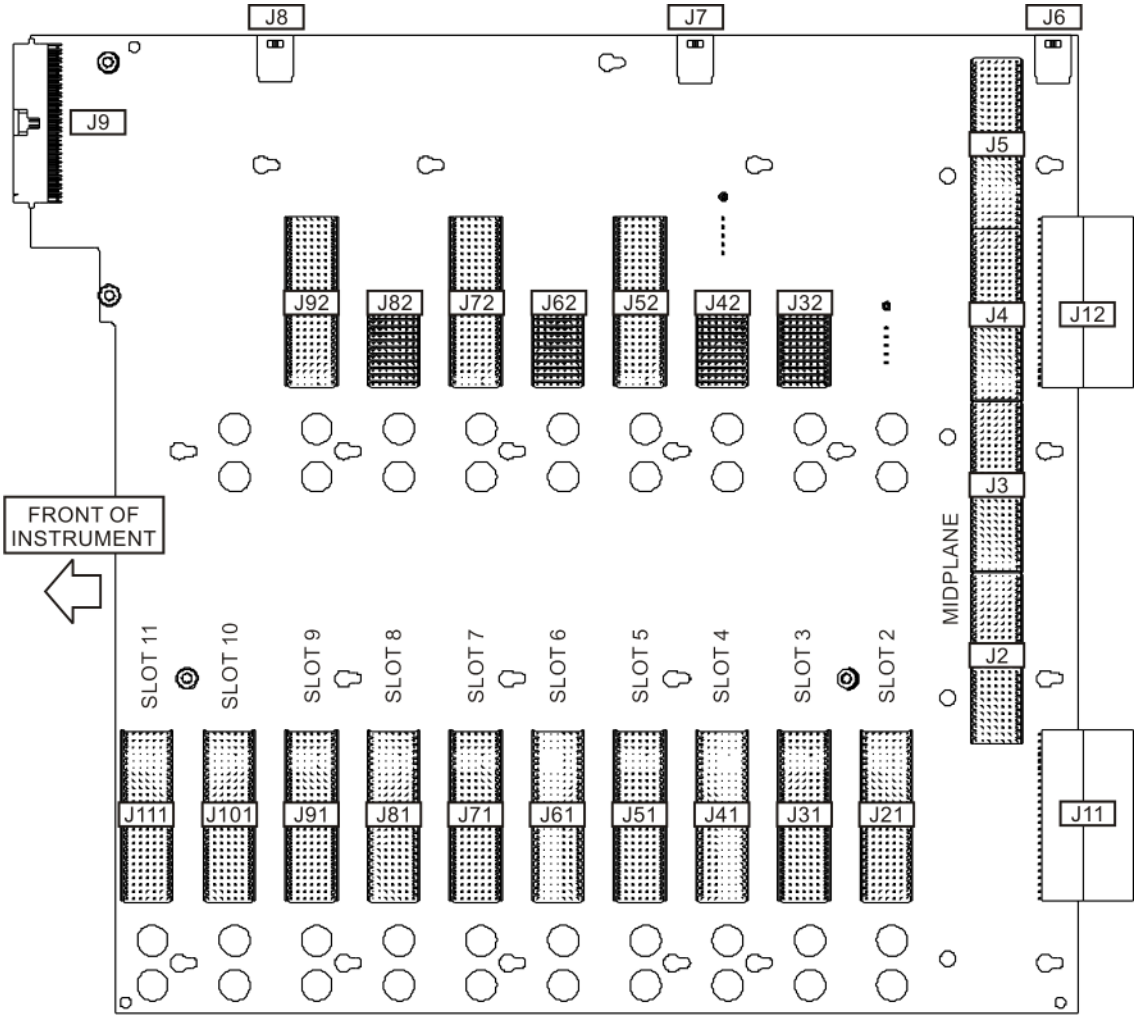

motherbd_connectors

Table 13-1

Motherboard Connector	What Plugs In?	Motherboard Connector	What Plugs In?
J2	A7, Midplane	J21	A16, Reference
J3	A7, Midplane	J31/J32	Option Slots
J4	A7, Midplane	J41/J42	Option Slots
J5	A7, Midplane	J51/J52	Option Slots
J6	B3, Fan	J61/J62	Option Slots
J7	B2, Fan	J71/J72	Option Slots
J8	B1, Fan	J81/J82	Option Slots
J9	Front Panel	J91/J92	Option Slots
J11	A3, Digital I.F, analog signals	J101	A14, LO Synthesizer
J12	A3, Digital I.F, analog signals	J111	A15, Front End Controller

A8 Motherboard Troubleshooting

There are no troubleshooting procedures for this assembly. If the Motherboard is suspect, it must be replaced.

A1 Front Panel Assembly

The major components of the A1 Front Frame Assembly are the A1A2 Front Panel Interface Board, A1A3 LCD, A1A4 LCD Inverter Board/DC-DC Converter, and the A1A5 Front Panel USB Interface Board, all of which are serviceable as individual components.

The A1 assembly is used to display the measurement results, accept user input via the keyboard, and connect USB peripheral devices.

A1A2 Front Panel Interface Board

The A1A2 Front Panel Interface board is serviced as an assembly only; no component level repair is supported.

The Front Panel Interface Board contains LCD control, Inverter drive, audio amplifiers, internal speaker, a 4 port USB hub, and a USB keyboard microcontroller.

The two different front panel rubber keypads attach to the back side of the board, which has the keyboard contacts printed on the reverse side.

The 4 ports from the USB hub contained on this board go to the 2 front panel USB connectors, the keyboard microcontroller, and the fourth port is unused.

A1A3 LCD

The LCD used is an 8.4inch XGA TFT display, which has a resolution of 1024 x 768. It has two backlights that are not individually replaceable.

A1A4 LCD Inverter Board/DC-DC Converter

The Inverter Board provides the high voltage required by the LCD backlights used on older PXA's. Newer PXA's use a DC-DC converter to power the LED backlights.

A1A5 Front Panel USB Interface Board

The Front Panel USB Interface Board provides the front panel USB connections.

14 Hardware Options

What You Will Find in This Chapter

The following information is found in this chapter.

A25 Wideband Analog IF Troubleshooting - Option B1X and B85 on page 326

A26 Wideband Digital IF Troubleshooting - Option B1X and B85 on page 330

A25 Wideband Analog IF Troubleshooting - Option B2X and B5X on page 331

A26 and A27 Wideband Digital IF Troubleshooting - Option B2X and B5X on page 338

Option BBA Analog I/Q Baseband Inputs Description on page 339

Option RTS, Streaming on page 341

The PXA signal analyzer has a variety of hardware options that can be purchased and installed at the time of new instrument sale, or as a post-sale upgrade. Some of these hardware options require the installation of additional hardware, and others require licensing hardware already present in the standard instrument hardware configuration.

A current list of all instrument options and retrofit requirements is available on the Keysight web site for the PXA signal analyzer at:

http://www.keysight.com/find/PXA_upgrades

Table 14-1 Hardware Options

Option	Description	Additional Hardware or License Only	Service Guide Section
ALV	Auxiliary Log Video (at rear panel Aux IF connector)	License Only	Chapter 8, "Front End Controller."
B25	25 MHz Analysis Bandwidth path	License Only	Chapter 9, "Analog/Digital IF."
B40	40 MHz Analysis Bandwidth path in addition to 25 MHz BW	License Only	Chapter 9, "Analog/Digital IF."
B1X	160 MHz Analysis Bandwidth path in addition to the 25 MHZ and 40 MHz BW	Additional hardware	This chapter
B85	85 MHz Analysis Bandwidth path	Additional hardware	This chapter
B2X	255 MHz Analysis Bandwidth path	Additional hardware	This chapter
B5X	510 MHz Analysis Bandwidth path	Additional hardware	This chapter
BBA	Analog I/Q Baseband Inputs	Additional Hardware	This chapter
CRP	Arbitrary IF Output (10 MHz to 75 MHz programmable, Aux IF connector on rear panel).	License Only	Chapter 8, "Front End Controller."
CR3	2nd IF Out (Aux IF connector on rear panel)	License Only	Chapter 8, "Front End Controller."
EA3	Electronic Attenuator	License Only	Chapter 6, "RF Input Section (RF/Microwave)."
EXM	External Mixing	Additional Hardware	Chapter 6, "RF Input Section (RF/Microwave)." and Chapter 7, "RF Input Section (Millimeter-Wave)."
LNP	Low Noise Path (Bypasses A11 Low Band Switch, used in high band only)	Additional hardware or license only depending on current instrument configuration. Both LNP and MPB hardware installed at same time. However, there may be cases where only one option is licensed.	Chapter 6, "RF Input Section (RF/Microwave)." Chapter 18, "SW1/SW2 Microwave Preselector Bypass and SW3 Low Noise Path Switches (Options MPB and LNP)" on page 469

Table 14-1 Hardware Options

Option	Description	Additional Hardware or License Only	Service Guide Section
MPB	Preselector Bypass (Bypasses the A12 Preselector filter used above 3.6 GHz)	Additional hardware or license only depending on current instrument configuration. Both LNP and MPB hardware installed at same time. However, there may be cases where only one option is licensed	Chapter 6, "RF Input Section (RF/Microwave)." Chapter 18, "SW1/SW2 Microwave Preselector Bypass and SW3 Low Noise Path Switches (Options MPB and LNP)" on page 469
P03	Preamp, 100 kHz to 3.6 GHz	License Only	Chapter 6, "RF Input Section (RF/Microwave)."
P08	Preamp, 100 kHz to 8.4 GHz	License Only	Chapter 6, "RF Input Section (RF/Microwave)."
P13	Preamp, 100 kHz to 13.6 GHz	License Only	Chapter 6, "RF Input Section (RF/Microwave)."
P26	Preamp, 100 kHz to 26.5 GHz	License Only	Chapter 6, "RF Input Section (RF/Microwave)."
P43	Preamp, 100 kHz to 43 GHz	License Only	Chapter 7, "RF Input Section (Millimeter-Wave)."
P44	Preamp, 100 kHz to 44 GHz	License Only	Chapter 7, "RF Input Section (Millimeter-Wave)."
P50	Preamp, 100 kHz to 50 GHz	License Only	Chapter 7, "RF Input Section (Millimeter-Wave)."
RTL	Data Link that enables rear panel Digital Bus connector.	License Only	
RTS	Streaming	License and Hardware	This chapter
YAV	Y-Axis Output (at rear panel Analog Out connector)	License Only	Chapter 9, "Analog/Digital IF."

NOTE See Chapter 15, "Block Diagrams," for information on how these hardware options are installed in the signal path.

A25 Wideband Analog IF Troubleshooting - Option B1X and B85

A25 Wideband Analog IF Assembly Description - Option B1X and B85

Refer to the Wideband Analog IF Option B1X or B85 Block Diagram in Chapter 15, “Block Diagrams,” for details.

The analyzer's RF input signal is down converted to a 300 MHz intermediate frequency by the A13 Front End assembly and routed through the A15 Front End Controller to A15J901. Cable W41 connects A15J901 to the input of the A25 Wideband Analog IF at J101. The signal is filtered, attenuation and gain applied based upon the instrument settings. This signal is then sampled by the ADC and the resultant data is the sent to the A26 Wideband Digital IF for processing via the W44 flex circuit. The A26 Wideband Digital IF has no service accessible locations and should be troubleshot from the front panel controls.

If the analyzer is using the Option B40, 40 MHz IF Path, the signal at 250 MHz IF frequency is switched to J102 and this 250 MHz IF is routed through W71 to the A3 Digital IF assembly.

Inputs to the A25 Assembly

J101 IF In, 250 MHz or 300 MHz IF signal from J901 of the A15 FEC

J301 2400 MHz Ref In, reference signal from J718 of the A16 Reference

J805 Cal In, calibrator signal from J17 of the A3 DIF

Outputs from the A25 Assembly

J302 2400 MHz Reference Out

J102 IF Out, 250 MHz IF signal to J15 of the A3 DIF

J806 Cal Out, calibrator signal to J726 of the A16 Reference

J2 ADC Data to J504 of the A26 WBDIF

A25 Wideband Analog IF Assembly Theory of Operation - Option B1X and B85

The A25 Wideband Analog IF assembly primary role is to properly filter and apply attenuation or gain to optimize the level going to the ADC and provide sufficient pre-filtering to reject images that would otherwise interfere with the signal of interest. Precision alignments are used to calibrate the filters, attenuators and gain of this assembly. It is not uncommon that the reported failure will come from failures reported when an alignment fails for this assembly. The alignment history file is a good indicator of a failure for this assembly. This file is a text file that can be edited with Notepad. The file is located in the following location:

E:\AlignDataStore\AlignmentHistory.txt

This file will list all alignments that have passed or failed. Alignments reporting a failure of the WBAIF assembly can in many cases be attributed to failure of this assembly. If however these errors follow errors in the RF section of the instrument, it is possible that additional WBAIF error will appear due to missing RF Calibration signals and not related to the A25 Wideband IF assembly.

Manually troubleshoot the assembly is basically verifying the 300 MHz IF signal is present and at the proper level. In addition you will want to verify input and output levels of the various calibration and reference signals.

Additionally, the A25 Analog IF has a built in RF Burst Trigger.

A25 Wideband Troubleshooting - Option B1X and B85

Verify the IF Input level

1. Turn the instrument off.
2. Remove the instrument cover. Refer to Chapter 18, “Assembly Replacement Procedures” in this service guide.
3. Turn on the signal analyzer and wait for the instrument to complete the boot up process.
4. Press **System**, **Alignments**, **Auto Align**, **Off**.
5. Press **Mode**, **IQ Analyzer**
6. Press **Meas**, **Complex Spectrum**
7. Press **Input/Output**, **Input, RF Calibrator**, **50 MHz**
8. Press **Meas Setup**, **IF Path**, **85 MHz** or **160 MHz**
9. Verify the 50 MHz signal is at –25 dBm on the analyzer display by pressing **FREQ**, **50 MHz**, **Span**, **1 MHz**, **Peak Search** on the analyzer. The marker readout should be 50 MHz at –25 dBm ±3 dB.
10. If this signal is out of tolerance or not present, determine if the issue is only present with the Wideband 85 MHz or 160 MHz path. Press **Meas Setup**, **IF Path**, **25 MHz**. If the signal is now correct, there is a likely failure of the A25 Wideband Analog IF or the A26 Wideband Digital IF. Proceed to the following sections to verify the 40 MHz IF path output at A25J102 and 2400 MHz frequency reference output at A25J302 before replacing either assembly.
11. If the signal is still incorrect in the 25 MHz path, troubleshoot the RF Input Section assemblies and the A15 Front End Controller. For the RF Input Section, refer to Chapter 6, “RF Input Section (RF/Microwave),” or Chapter 7, “RF Input Section (Millimeter-Wave),” depending on the installed frequency range option. Refer to the narrowband and wideband IF output sections of Chapter 8, “Front End Controller,” for the A15 FEC.

Verify the 40 MHz IF Path Output

The J102 output is active only when the 40 MHz IF path is selected. The following test can be used to assure the W41 cable and the switch on the A25 Wideband AIF are good.

1. To select the 40 MHz IF path, press **Meas Setup**, **IF Path**, **40 MHz**.
2. Turn on the 50 MHz calibrator as explained in the last section. Set the center frequency to 50 MHz. Set the span to 0 Hz.
3. Connect A25J102 to an external spectrum analyzer. Tune the spectrum analyzer to 250 MHz. This port switches the 250 MHz IF that is input to the A25 Wideband Analog IF to be routed to the A3J15 40 MHz Digital IF. If

this –23 dBm ±3 dB signal is present, you have verified the 250 MHz IF from the A15J901 Front End Controller. If this signal is not present, verify the signal is present on A15J901 of the A15 Front End Controller.

Verify the 2400 MHz Frequency Reference

1. Turn the instrument off.
2. Remove the instrument cover. Refer to Chapter 18, “Assembly Replacement Procedures” in this service guide.
3. Turn on the signal analyzer and wait for the instrument to complete the boot up process.
4. Press **System**, **Alignments**, **Auto Align**, **Off**.
5. Press **Mode**, **IQ Analyzer**
6. Press **Meas**, **Complex Spectrum**
7. Press **Input/Output**, **Input, RF Calibrator**, **50 MHz**
8. Press **Mode Setup**, **IF Path**, **85 MHz** or **160 MHz**
9. Connect an external spectrum analyzer to A25J302. Verify reference signal at 2400 MHz at a level of –30 dBm.

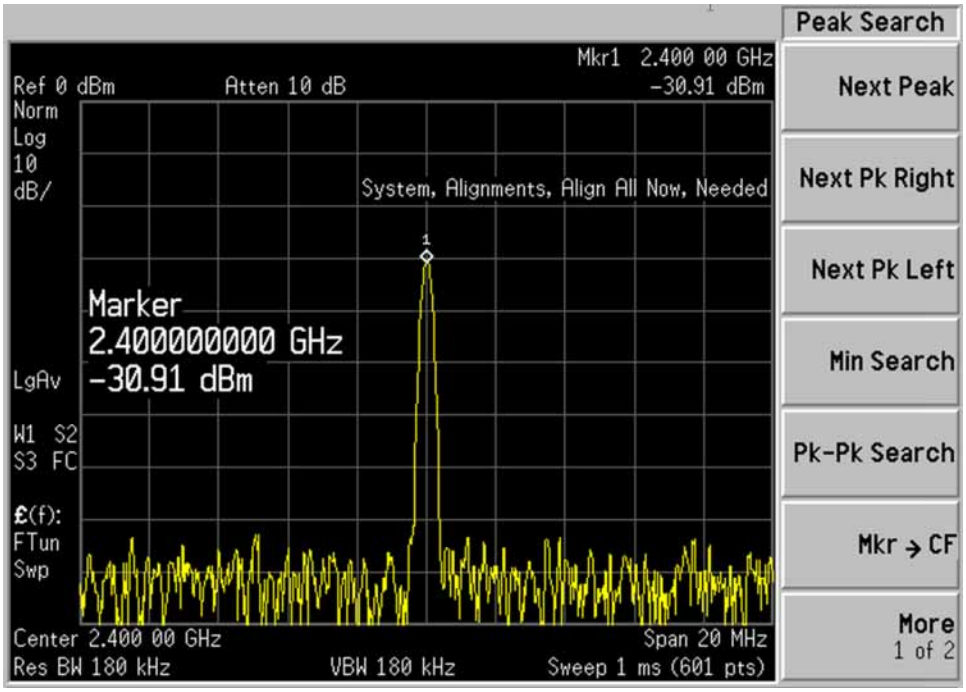

A26 Wideband Digital IF Troubleshooting - Option B1X and B85

Verify the Wideband Signal Path

Normally failure of this assembly will occur during extensive alignments. Verify if there are alignment error related to the WBDIF located in the E:\AlignDataStore\AlignmentHistrory.txt files.

If errors are found related to WBDIF, the A26 Wideband Digital IF assembly may need to be replaced. To troubleshoot this module set the instrument up as below:

1. Turn on the signal analyzer and wait for the instrument to complete the boot up process.
2. Press **System**, **Alignments**, **Auto Align**, **Off**.
3. Press **Mode**, **IQ Analyzer**
4. Press **Meas**, **Complex Spectrum**
5. Press **Input/Output**, **Input, RF Calibrator**, **50 MHz**
6. Press **Span**, **10 MHz**
7. Press **Mode Setup**, **IF Path**, **85 MHz** or **160 MHz**.
8. Verify the 50 MHz signal is at –25 dBm on the analyzer display by pressing **Peak Search** on the analyzer. The marker readout should be 50 MHz at –25 dBm ±3 dB.
9. If this signal is out of tolerance or not present, determine if the issue is only present with the Wideband 85 MHz or 160 MHz path. Press **Meas Setup**, **IF Path**, **25 MHz**. If the signal is now correct, there is a likely failure of the A26 Wideband Digital IF or the A25 Wideband Analog IF. Verify the A25 WBAIF 2400 MHz frequency reference (see page 329) before replacing either assembly.
10. If the signal is still incorrect in the 25 MHz path, troubleshoot the RF Input Section assemblies and the A15 Front End Controller. For the RF Input Section, refer to Chapter 6, “RF Input Section (RF/Microwave),” or Chapter 7, “RF Input Section (Millimeter-Wave),” depending on the installed frequency range option. Refer to the narrowband and wideband IF output sections of Chapter 8, “Front End Controller,” for the A15 FEC.

A25 Wideband Analog IF Troubleshooting - Option B2X and B5X

A25 Wideband Analog IF Assembly Description - Option B2X and B5X

The analyzer's RF input signal is down converted to a 250 MHz, 750 MHz, or 877.148 MHz intermediate frequency by the A13 Front End assembly and routed through the A15 Front End Controller to A15J901. Cable W70 connects to A25J17 Wideband Analog IF Input. The signal is filtered, attenuation and gain applied based upon the instrument settings. This signal is then sampled by the ADC and the resultant data is the sent to the A26 Wideband Digital IF (Option B2X) for processing via the flex circuit cable. If the instrument has Option B5X, 510 MHz Analysis BW, the resultant data is sent to the A26 and A27 Wideband Digital IF boards.The A26 and A27 Wideband Digital IF have no service accessible locations and should be troubleshot from the front panel controls.

If the analyzer is using the Option B40, 40 MHz IF Path, the signal at 250 MHz IF frequency is switched to J18 and this 250 MHz IF is routed through W71 to the A3 Digital IF assembly.

If the analyzer is using the Option B2X, 255 MHz IF Path, the signal at J17 will be at 750 MHz. If the analyzer is using the Option B5X, 510 MHz Path, the signal at J17 will be 877.148 MHz. Both of these IF signal frequencies are processed through the A25 Wideband Analog IF assembly.

Inputs to the A25 Assembly

J17 IF In, 250 MHz or 750 MHz or 877.148 MHz IF signal from J901 of the A15 FEC

J4 2400 MHz Ref In, reference signal from J718 of the A16 Reference

J2 Cal In, calibrator signal from J17 of the A3 DIF

Outputs from the A25 Assembly

J3 2400 MHz Reference Out

J18 IF Out, 250 MHz IF signal to J15 of the A3 DIF

J1 Cal Out, calibrator signal to J726 of the A16 Reference

J23 ADC Data to J504 of the A26 WBDIF

A25 Wideband Analog IF Assembly Theory of Operation - Option B2X and B5X

The A25 Wideband Analog IF assembly primary role is to properly filter and apply attenuation or gain to optimize the level going to the ADC and provide sufficient pre-filtering to reject images that would otherwise interfere with the signal of interest. Precision alignments are used to calibrate the filters, attenuators and gain of this assembly. It is not uncommon that the reported failure will come from failures reported when an alignment fails for this assembly. The alignment history file is a good indicator of a failure for this assembly. This file is a text file that can be viewed using a text editor. The file is located in the following location:

E:\AlignDataStore\AlignmentHistory.txt

This file will list all alignments that have passed or failed. Alignments reporting a failure of the WBAIF assembly can in many cases be attributed to failure of this assembly. If however these errors follow errors in the RF section of the instrument, it is possible that additional WBAIF error will appear due to missing RF Calibration signals and not related to the A25 Wideband IF assembly.

Manually troubleshoot the assembly is basically verifying the proper IF signal at J17 is present and at the proper level. In addition you will want to verify input and output levels of the various calibration and reference signals.

A25 Wideband Analog IF Assembly Troubleshooting - Option B2X and B5X

Verify the IF Input level

1. Turn the instrument off.
2. Remove the instrument enclosure and top brace covers. Refer to Chapter 18, “Assembly Replacement Procedures.” in this service guide.
3. Turn on the signal analyzer and wait for the instrument to complete the boot up process.
4. Press **System**, **Alignments**, **Auto Align**, **Off**.
5. Press **Mode/Meas**, **IQ Analyzer (Basic)**, **Complex Spectrum**, **OK**
6. Press **Input/Output**, **Input, RF Calibrator**, **50 MHz**
7. Press **Frequency** hard key and set the center frequency to 50 MHz.
8. Press **Meas Setup**, **IF Path**. Tap **IF Path** and choose **255 MHz** or **510 MHz** from the drop down menu. If Option B5X, 510 MHz, is installed, there is no 255 IF Path selection. Choose **510 MHz** in this case.
9. Verify the 50 MHz signal is at –25 dBm on the analyzer display by pressing **Peak Search** on the analyzer. The marker readout should be 50 MHz at –25 dBm ±3 dB. See Figure 14-1.

Figure 14-1 50 MHz Signal

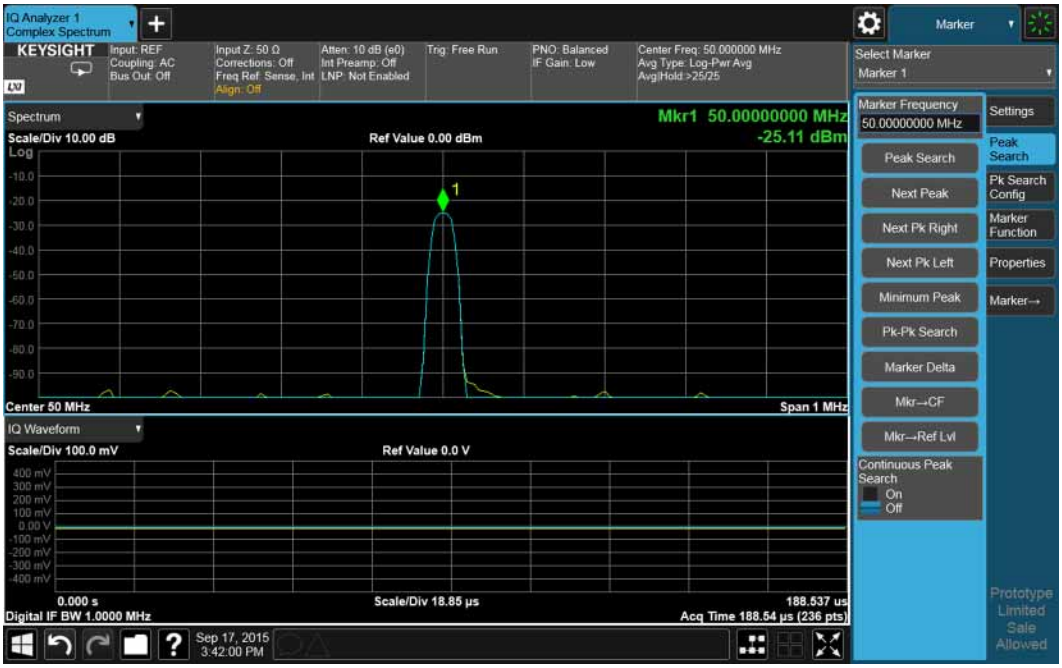

10. If this signal is out of tolerance or not present, determine if the issue is only present with the Wideband 255 MHz or 510 MHz path. Press **Meas Setup**, **IF Path**, **25 MHz**. If the signal is now correct, there is a likely failure of the A25 Wideband Analog IF or the A26/A27 Wideband Digital IF. Proceed to the following sections to verify the 40 MHz IF path output at A25J18 and 2400 MHz frequency reference output at A25J3 before replacing either assembly.
11. If the signal is still incorrect in the 25 MHz path, troubleshoot the RF Input Section assemblies and the A15 Front End Controller. For the RF Input Section, refer to Chapter 6, “RF Input Section (RF/Microwave),” or Chapter 7, “RF Input Section (Millimeter-Wave),” depending on the installed frequency range option. Refer to the narrowband and wideband IF output sections of Chapter 8, “Front End Controller,” for the A15 FEC.

Verify the 40 MHz IF Path Output

The J18 output is active only when the 40 MHz IF path is selected.

The following test can be used to assure the W41 cable and the switch on the A25 Wideband AIF are good.

1. To select the 40 MHz IF path, press **Meas Setup**, **IF Path**, **40 MHz**.
2. Turn on the 50 MHz calibrator as explained in the last section. Set the center frequency to 50 MHz. Set the span to 0 Hz.
3. Connect A25J18 to an external spectrum analyzer. Tune the spectrum analyzer to 250 MHz. This port switches the 250 MHz IF that is input to the A25 Wideband Analog IF to be routed to the A3J15 40 MHz Digital IF. If this –23 dBm ±3 dB signal is present, you have verified the 250 MHz IF from the A15J901 Front End Controller. If this signal is not present, verify the signal is present on A15J901 of the A15 Front End Controller.

Verify the 2400 MHz Frequency Reference

1. Turn the instrument off.
2. Remove the instrument cover. Refer to Chapter 18, “Assembly Replacement Procedures.” in this service guide.
3. Turn on the signal analyzer and wait for the instrument to complete the boot up process.
4. Press **System**, **Alignments**, **Auto Align**, **Off**.
5. Press **Mode/Meas**, **IQ Analyzer**, **Complex Spectrum**, **OK**.
6. Press **Input/Output**, **Input, RF Calibrator**, **50 MHz**
7. Press **Meas Setup**, **IF Path**. Tap **IF Path** and choose **255 MHz** or **510 MHz** from the drop down menu.
8. Verify the 50 MHz signal is at –25 dBm on the analyzer display by pressing **FREQ**, **50 MHz**, **Span**, **1 MHz**, **Peak Search** on the analyzer. The marker readout should be 50 MHz at –25 dBm ±3 dB. If this reference signal is measuring incorrectly, see Chapter 6, “RF Input Section (RF/Microwave).” in this service guide.
9. Connect a known good spectrum analyzer to A25J3. Verify reference signal at 2400 MHz at a level of + 9 dBm.

Figure 14-2 2400 MHz Signal

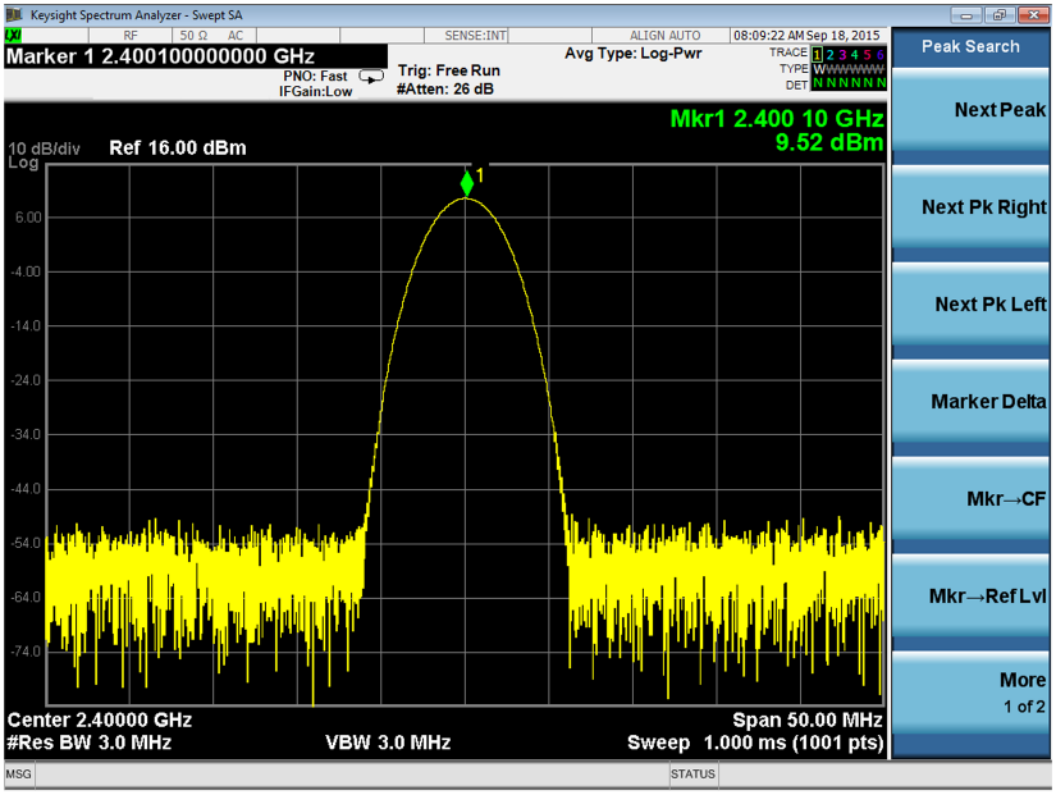

A26 and A27 Wideband Digital IF Troubleshooting - Option B2X and B5X

Verify the Wideband Signal Path

Normally failure of this assembly will occur during extensive alignments. Verify if there are alignment error related to the WBDIF located in the E:\AlignDataStore\AlignmentHistrory.txt files.

If errors are found related to WBDIF, the A26 or A27 Wideband Digital IF assemblies may need to be replaced. To troubleshoot this module set the instrument up as below:

1. Turn on the analyzer and wait for the instrument to complete the boot up process.
2. Press **System**, **Alignments**, **Auto Align**, **Off**.
3. Press **Mode**, **IQ Analyzer**
4. Press **Meas**, **Complex Spectrum**
5. Press **Input/Output**, **Input, RF Calibrator**, **50 MHz**
6. Press **Span**, **10 MHz**
7. Press **Mode Setup**, **IF Path**, **255 MHz** or **510 MHz**
8. Verify the 50 MHz signal is at –25 dBm on the analyzer display by pressing **Peak Search** on the analyzer. The marker readout should be 50 MHz at –25 dBm ±3 dB.
9. If this signal is not present, determine if the issue is only present with the wideband path. Press **Mode Setup**, **IF Path**, **40 MHz**. If the signal is now present, there is a likely failure of the A26/A27 Wideband Digital IF or the A25 Wideband Analog IF

Option BBA Analog I/Q Baseband Inputs Description

The Analog Baseband I/Q inputs is a hardware option for the N9030B Signal Analyzer. The option can be ordered at the time of sale as N9030B-BBA or as a post-sale upgrade as N9030BU-BBA. This option requires a license key to be fully operational.

The BBIQ option consists of 4 main components:

- LED board
- BBIQ Interface board
- BBIQ Main board
- Low noise ribbon cable that connects the BBIQ Interface board to the BBIQ Main board

A17 LED Board

- Contains two edge connectors; J2 and J1 that plug into J20 and P100 edge connectors on the BBIQ Interface board.
- Five visible LEDs for user information.
- Probe interface contact signals for all four channels I, I, Q, and Q.

A18 BBIQ Interface Board

- Allows switching between Single Ended (SE) and Differential (Balanced) for the two input channels.
- Accommodates 1MW and 50W input paths.
- Converts all signals to a differential format with a 2.5V common-mode voltage to route to the BBIQ Main board over a 60-pin micro coaxial connector at J1.
- Power and control for the BBIQ Interface board are provided from the BBIQ Main board via a ribbon cable, though some of the power supplies are locally regulated on the BBIQ Interface board to minimize spurious responses.
- A square wave calibration signal is provided to the user via a BNC Cal Out connector on the BBIQ Interface board. This signal originates on the BBIQ Main board and is buffered and attenuated on the BBIQ Interface board.
- Passes signals for the LED board and Infinimax probe ID and power from the 60-pin connector from the BBIQ Main board to a pair of edge connectors that interface to the LED board. ESD protection is provided on the BBIQ Interface board.

- EEPROM is used to identify the board and relay drivers to accommodate the input path switching. Some of the relay drivers that require fast switching (for overvoltage protection) are on the BBIQ Main board.
- Shields are on the board to minimize spurious responses.

A19 BBIQ Main Board

- Provides probe power to the BBIQ Interface board
- Power Supply filtering and regulation
- Contains FPGA (field programmable gate arrays)
- Provides LED control to the LED board
- Receives I, I, Q, and Q data from BBIQ Interface board
- Controls (9) relays on the BBIQ Interface board
- Provides probe identification for system use
- Overload detection
- On board relay control for various gain stages
- Variable gain stages
- Provides square wave calibrator output signal to BBIQ Interface board
- Dither
- 10 MHz input from the Reference board
- Onboard 16 bit 100Ms/S ADC
- Triggering Circuits

Option RTS, Streaming

Description

Option RTS provides real time I and Q data to the instrument rear panel Wideband Digital Bus I and Q connectors.

External record and playback hardware is available from X-Com Inc. to connect to the Option RTS rear panel ports.

Signal Analyzer Hardware Requirements

The signal analyzer must contain the Wideband Digital IF and Wideband Analog IF assemblies that are present when the analyzer has Option B85, or B1X or B2X or B5X.

To verify the option is licensed, and the Wideband Digital hardware is present, press **System**, **Show System** and verify the presence of one or more options listed above (when Option B5X is present, you will also see Option B2X).

Then press **System**, **Show Hardware** and confirm the instrument can identify the hardware. You will see both WB Analog IF and WB Digital IF listed. If Option B5X is installed, you will see two WB Digital IF assemblies listed.

The signal analyzer must contain the Wideband Digital IF Extension board. This board is also listed in the Show Hardware screen as WBDIF Extension.

The Wideband Digital IF Extension board is only present when Option RTS is installed in the instrument, and is located at the right rear of the instrument. The board has I and Q connectors that protrude out of slots in the rear panel, and are labeled Wideband Digital Bus.

The Wideband Digital IF Extension board provides buffering and level shifting to the I and Q signals that come from the Wideband Digital IF assembly via a flex circuit cable. If the instrument contains Option B5X (two Wideband Digital IF assemblies), there will be two flex cables.

Software Requirements

The instrument must have the following options installed:

– N9030B-RT1 or N9030B-RT2, Real Time Analysis

– N9030B-RTS Real Time Data Streaming

Press **System**, **Show System** and verify the options listed above are present.

Functionality Check

1. Enter Real Time Analysis mode by pressing **MODE/MEAS**. Select **Real-Time Spectrum Analyzer**, **OK**.
2. Press **Input/Output** and select **Output**.
3. Press **Wideband Digital Bus On** to activate the rear panel Wideband Digital Bus connectors, and then verify that the green Stream LED next to the I output connector on the rear panel is illuminated.

There is no easy way to determine if the I and Q data at the rear panel is correct. However if the instrument can complete the power on tests and alignments without an error, and you perform the functionality test above, Option RTS should be working correctly.

Figure 14-3 Option RTS

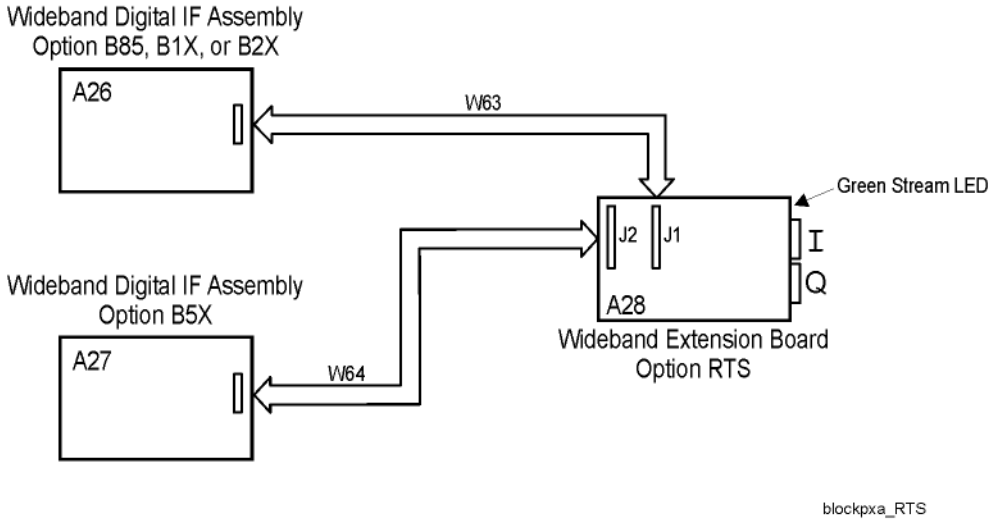

15 Block Diagrams

What You Will Find in This Chapter

The following sections are found in this chapter:

RF/µW Low Band Path Block Diagram
RF/µW High Band Path #1 Block Diagram
RF/µW High Band Path #2 Block Diagram
mmW Low Band Path Block Diagram
mmW High Band Path #1 Block Diagram
mmW High Band Path #2 Block Diagram
mmW High Band Path #3 Block Diagram
RF/µW Low Band Path Opt EP0 and B2X Block Diagram
RF/µW Low Band Path Opt EP0 and B5X Block Diagram
mmW High Band Path #1 Opt EP0 and B5X Block Diagram
Reference and LO Synthesizer Opt EP1 Block Diagram
DDS LO Synthesizer Opt EP0 Block Diagram
Analog IF Block Diagram
Wideband Analog IF Opt B1X and B85 Block Diagram
Wideband Analog IF Opt B2X and B5X Block Diagram
Digital IF Block Diagram
Computer Block Diagram

Block Diagrams

Block Diagrams

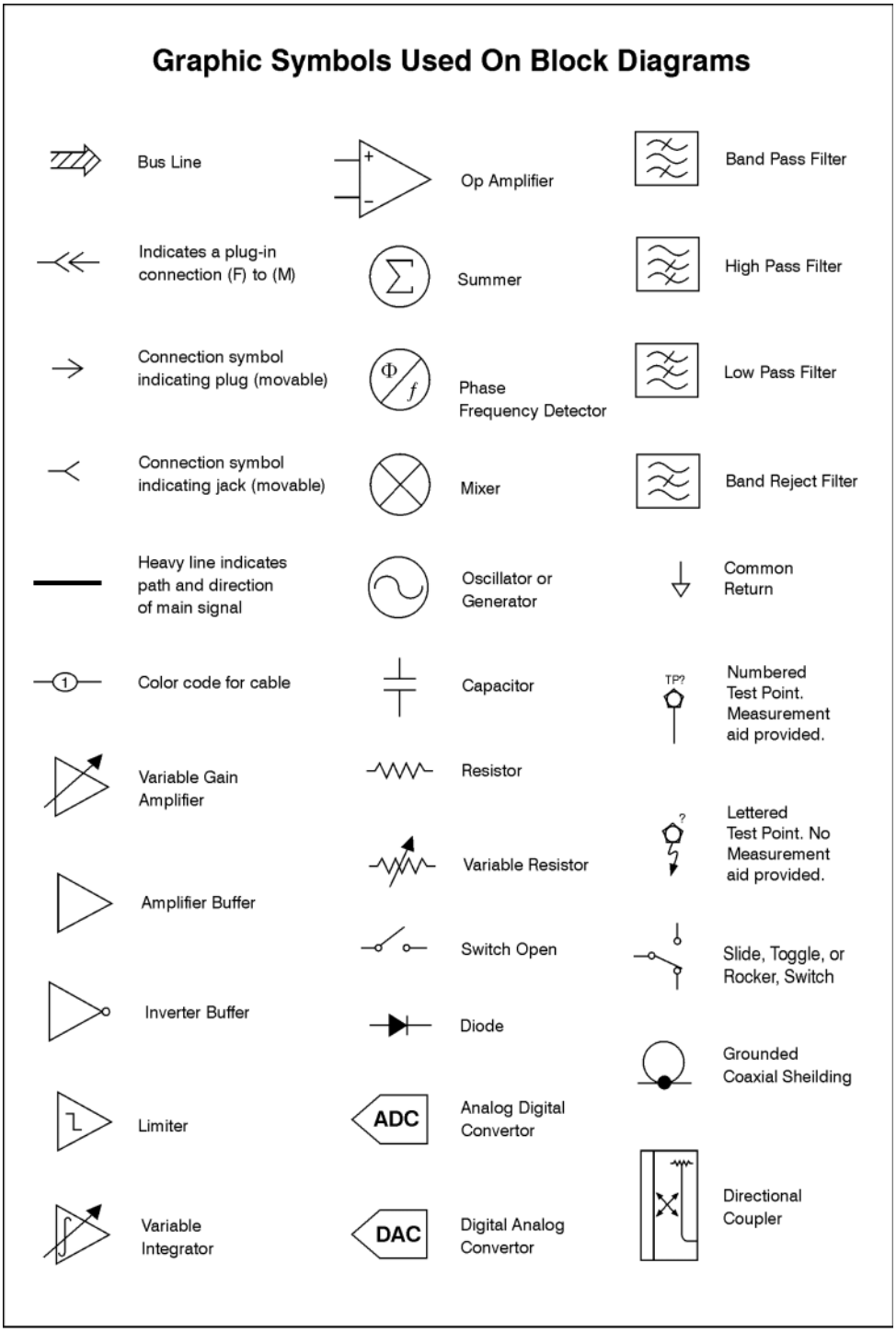

sa63a

RF/µW Low Band Path Block Diagram
(Options 503, 508, 513, 526; RF Input 3 Hz to 3.6 GHz)

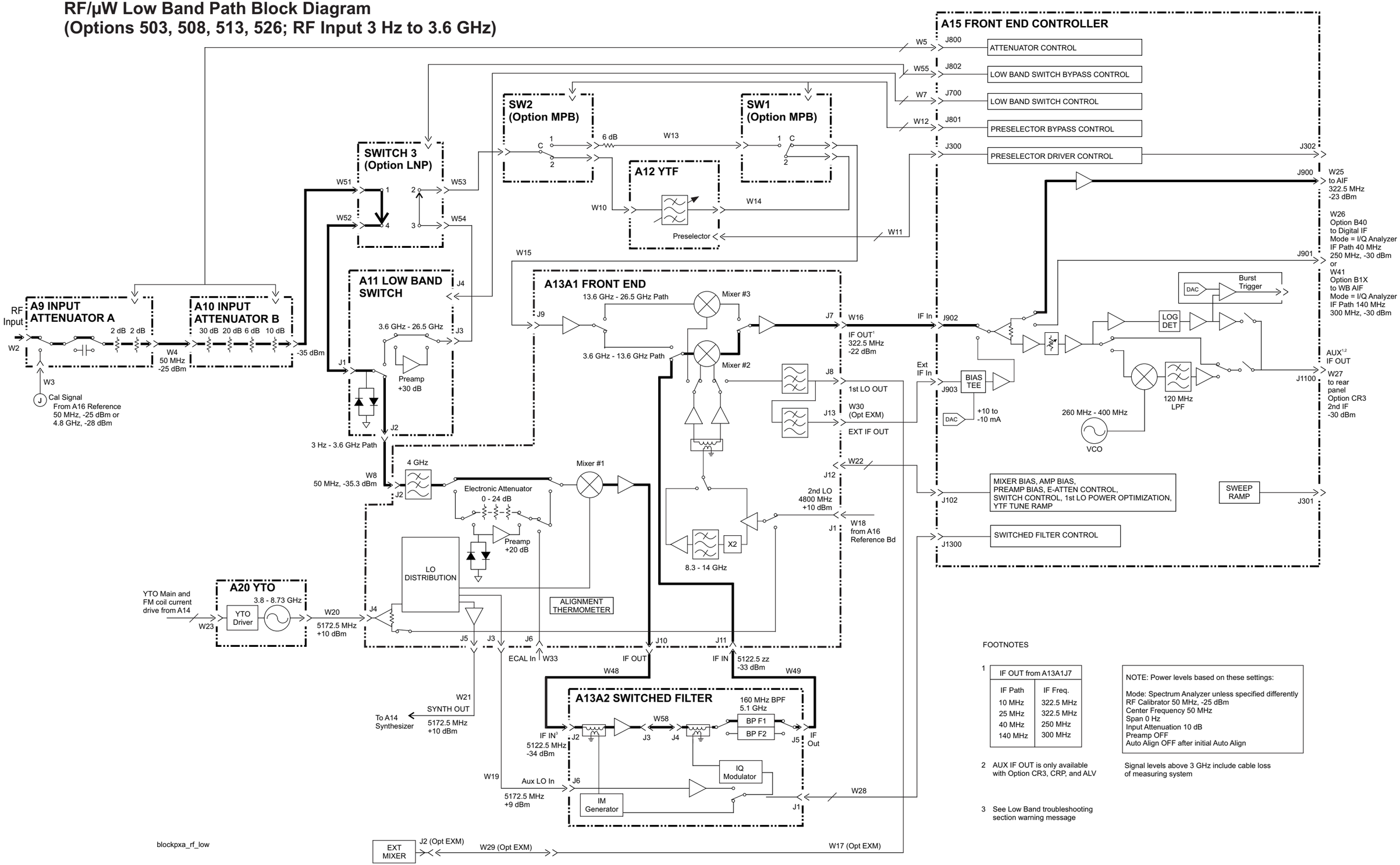

FOOTNOTES

1

IF OUT from A13A1J7	
IF Path	IF Freq.
10 MHz	322.5 MHz
25 MHz	322.5 MHz
40 MHz	250 MHz
140 MHz	300 MHz

2 AUX IF OUT is only available with Option CR3, CRP, and ALV

3 See Low Band troubleshooting section warning message

NOTE: Power levels based on these settings:

Mode: Spectrum Analyzer unless specified differently
RF Calibrator 50 MHz, -25 dBm
Center Frequency 50 MHz
Span 0 Hz
Input Attenuation 10 dB
Preamp OFF
Auto Align OFF after initial Auto Align

Signal levels above 3 GHz include cable loss of measuring system

RF/µW High Band Path #1 Block Diagram
(Options 503, 508, 513, 526; RF Input 3.6 to 13.6 GHz)

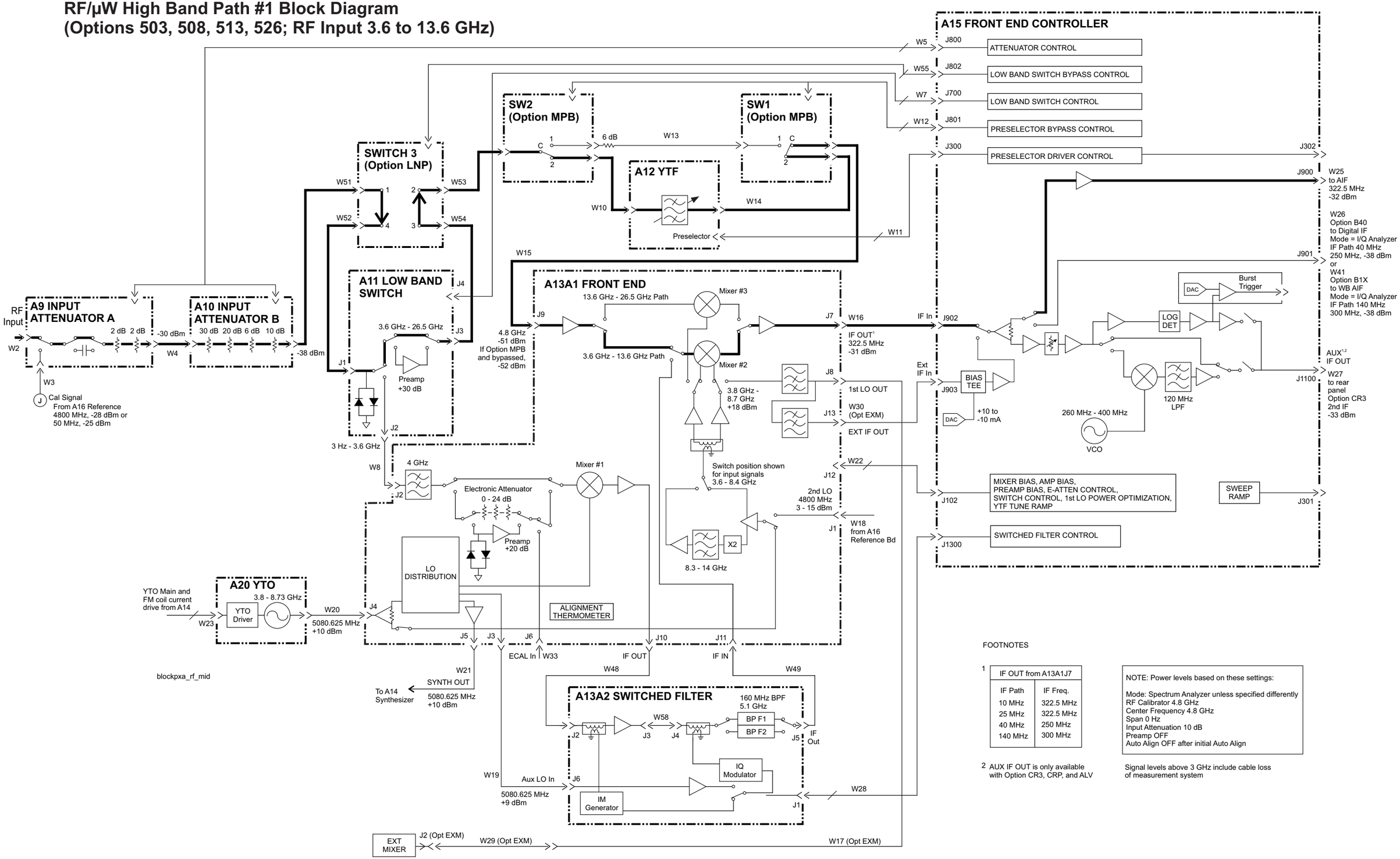

FOOTNOTES

1

IF OUT from A13A1J7	
IF Path	IF Freq.
10 MHz	322.5 MHz
25 MHz	322.5 MHz
40 MHz	250 MHz
140 MHz	300 MHz

2 AUX IF OUT is only available with Option CR3, CRP, and ALV

NOTE: Power levels based on these settings:

Mode: Spectrum Analyzer unless specified differently
RF Calibrator 4.8 GHz
Center Frequency 4.8 GHz
Span 0 Hz
Input Attenuation 10 dB
Preamp OFF
Auto Align OFF after initial Auto Align

Signal levels above 3 GHz include cable loss of measurement system

RF/µW High Band Path #2 Block Diagram
(Option 526; RF Input 13.6 GHz to 26.5 GHz)

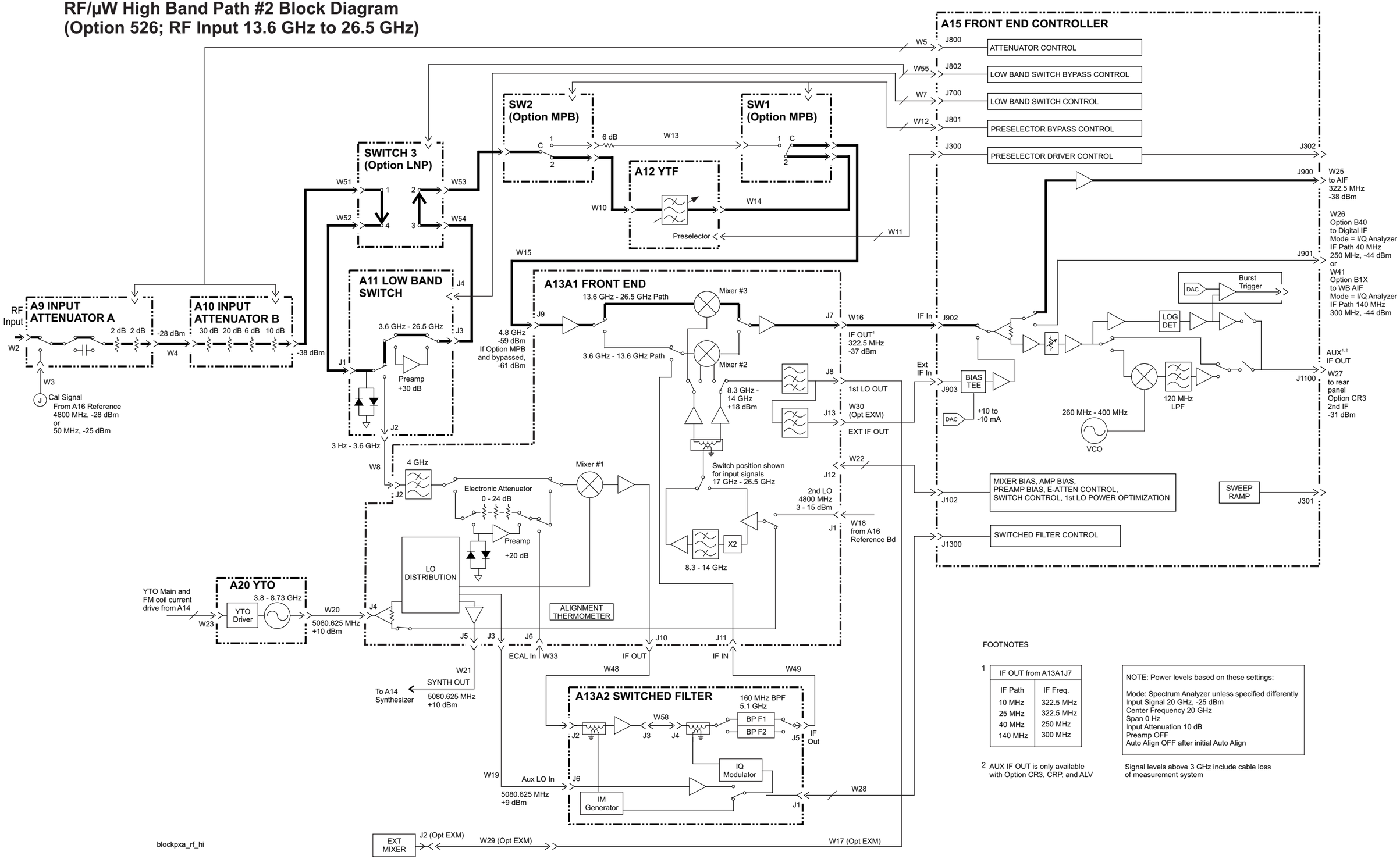

blockpxa_rf_hi

FOOTNOTES

1

IF OUT from A13A1J7	
IF Path	IF Freq.
10 MHz	322.5 MHz
25 MHz	322.5 MHz
40 MHz	250 MHz
140 MHz	300 MHz

2 AUX IF OUT is only available with Option CR3, CRP, and ALV

NOTE: Power levels based on these settings:

Mode: Spectrum Analyzer unless specified differently
Input Signal 20 GHz, -25 dBm
Center Frequency 20 GHz
Span 0 Hz
Input Attenuation 10 dB
Preamp OFF
Auto Align OFF after initial Auto Align

Signal levels above 3 GHz include cable loss of measurement system

mmW Low Band Path Block Diagram
(Options 544, 550; RF Input 3 Hz to 3.6 GHz)

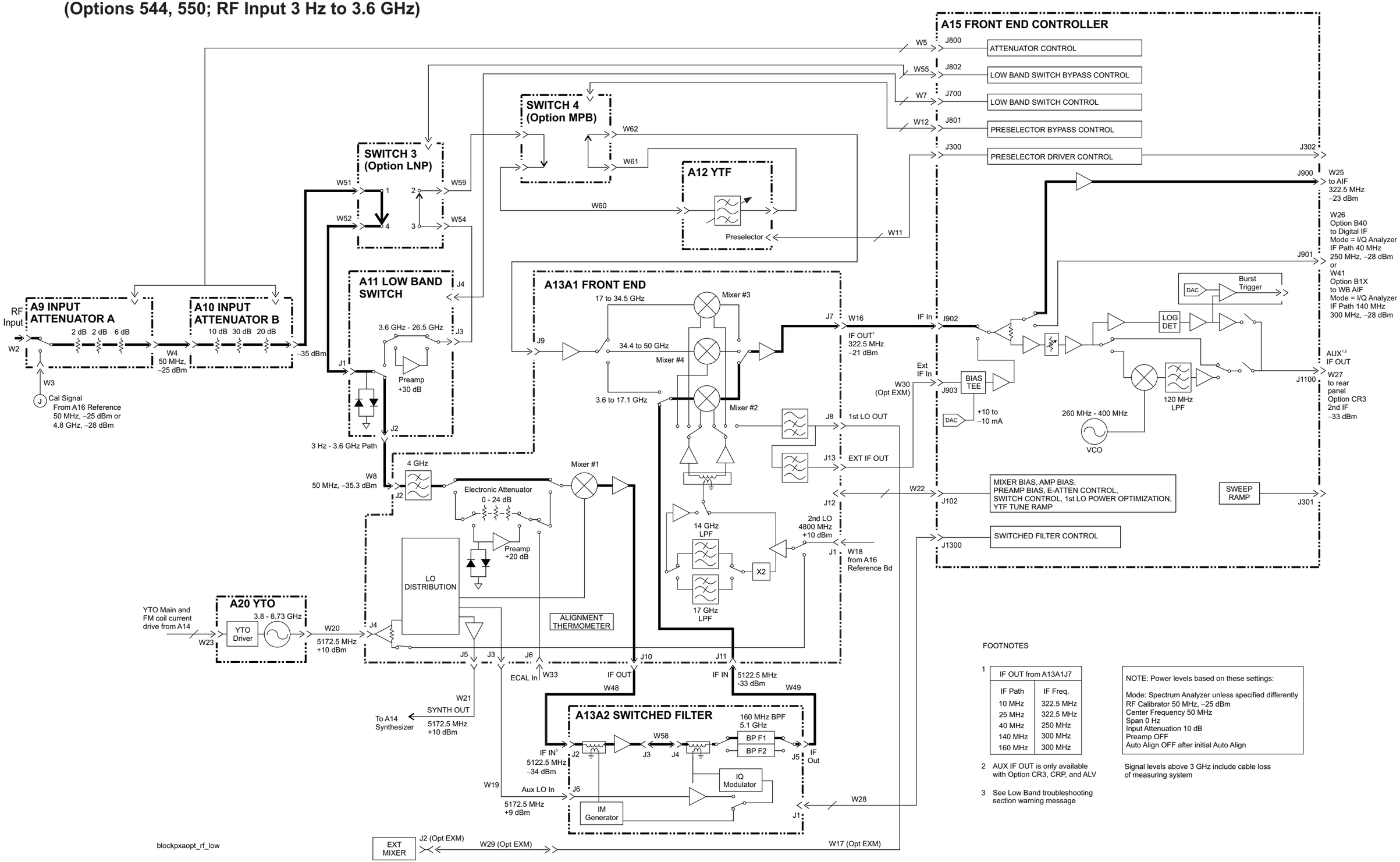

FOOTNOTES

1

IF OUT from A13A1J7	
IF Path	IF Freq.
10 MHz	322.5 MHz
25 MHz	322.5 MHz
40 MHz	250 MHz
140 MHz	300 MHz
160 MHz	300 MHz

2 AUX IF OUT is only available with Option CR3, CRP, and ALV

3 See Low Band troubleshooting section warning message

NOTE: Power levels based on these settings:

Mode: Spectrum Analyzer unless specified differently
RF Calibrator 50 MHz, –25 dBm
Center Frequency 50 MHz
Span 0 Hz
Input Attenuation 10 dB
Preamp OFF
Auto Align OFF after initial Auto Align

Signal levels above 3 GHz include cable loss of measuring system

mmW High Band Path #1 Block Diagram
(Options 544, 550; RF Input 3.6 to 17.1 GHz)

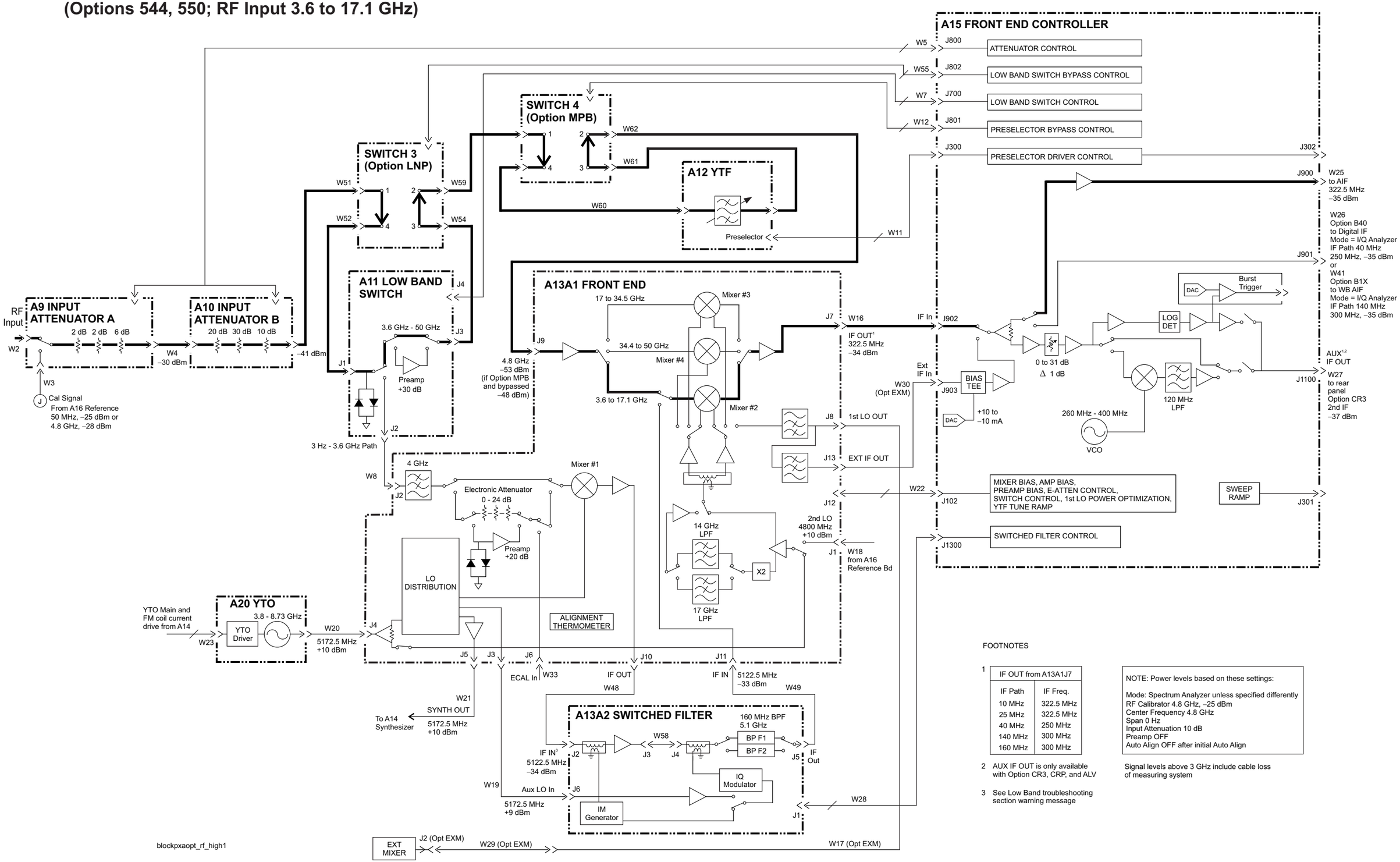

FOOTNOTES

1

IF OUT from A13A1J7	
IF Path	IF Freq.
10 MHz	322.5 MHz
25 MHz	322.5 MHz
40 MHz	250 MHz
140 MHz	300 MHz
160 MHz	300 MHz

2 AUX IF OUT is only available with Option CR3, CRP, and ALV

3 See Low Band troubleshooting section warning message

NOTE: Power levels based on these settings:

Mode: Spectrum Analyzer unless specified differently
RF Calibrator 4.8 GHz, –25 dBm
Center Frequency 4.8 GHz
Span 0 Hz
Input Attenuation 10 dB
Preamp OFF
Auto Align OFF after initial Auto Align

Signal levels above 3 GHz include cable loss of measuring system

mmW High Band Path #2 Block Diagram
(Options 544, 550; RF Input 17.1 to 34.5 GHz)

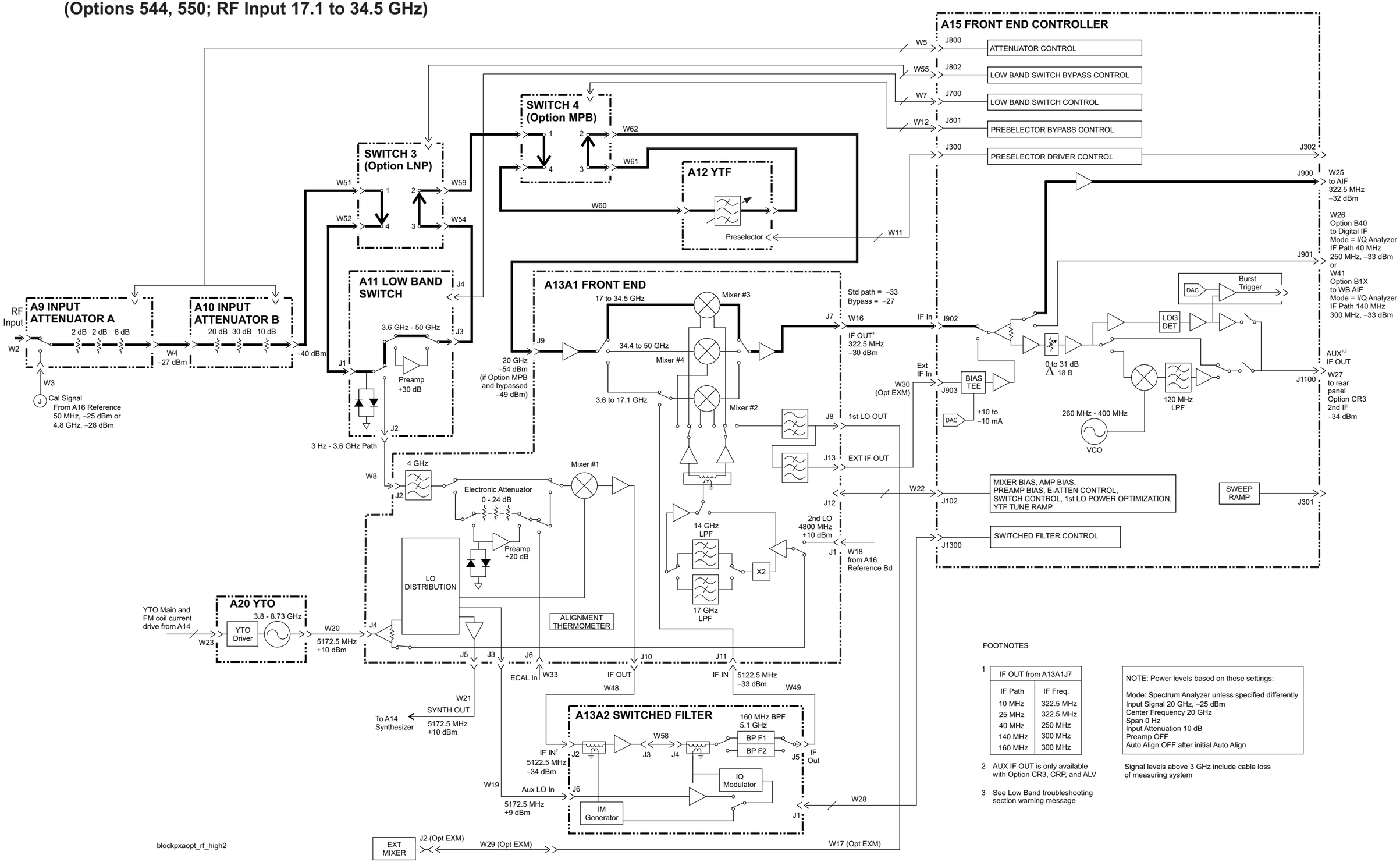

FOOTNOTES

1

IF OUT from A13A1J7	
IF Path	IF Freq.
10 MHz	322.5 MHz
25 MHz	322.5 MHz
40 MHz	250 MHz
140 MHz	300 MHz
160 MHz	300 MHz

2 AUX IF OUT is only available with Option CR3, CRP, and ALV

3 See Low Band troubleshooting section warning message

NOTE: Power levels based on these settings:

Mode: Spectrum Analyzer unless specified differently
Input Signal 20 GHz, –25 dBm
Center Frequency 20 GHz
Span 0 Hz
Input Attenuation 10 dB
Preamp OFF
Auto Align OFF after initial Auto Align

Signal levels above 3 GHz include cable loss of measuring system

mmW High Band Path #3 Block Diagram
(Options 544, 550; RF Input 34.5 to 50 GHz)

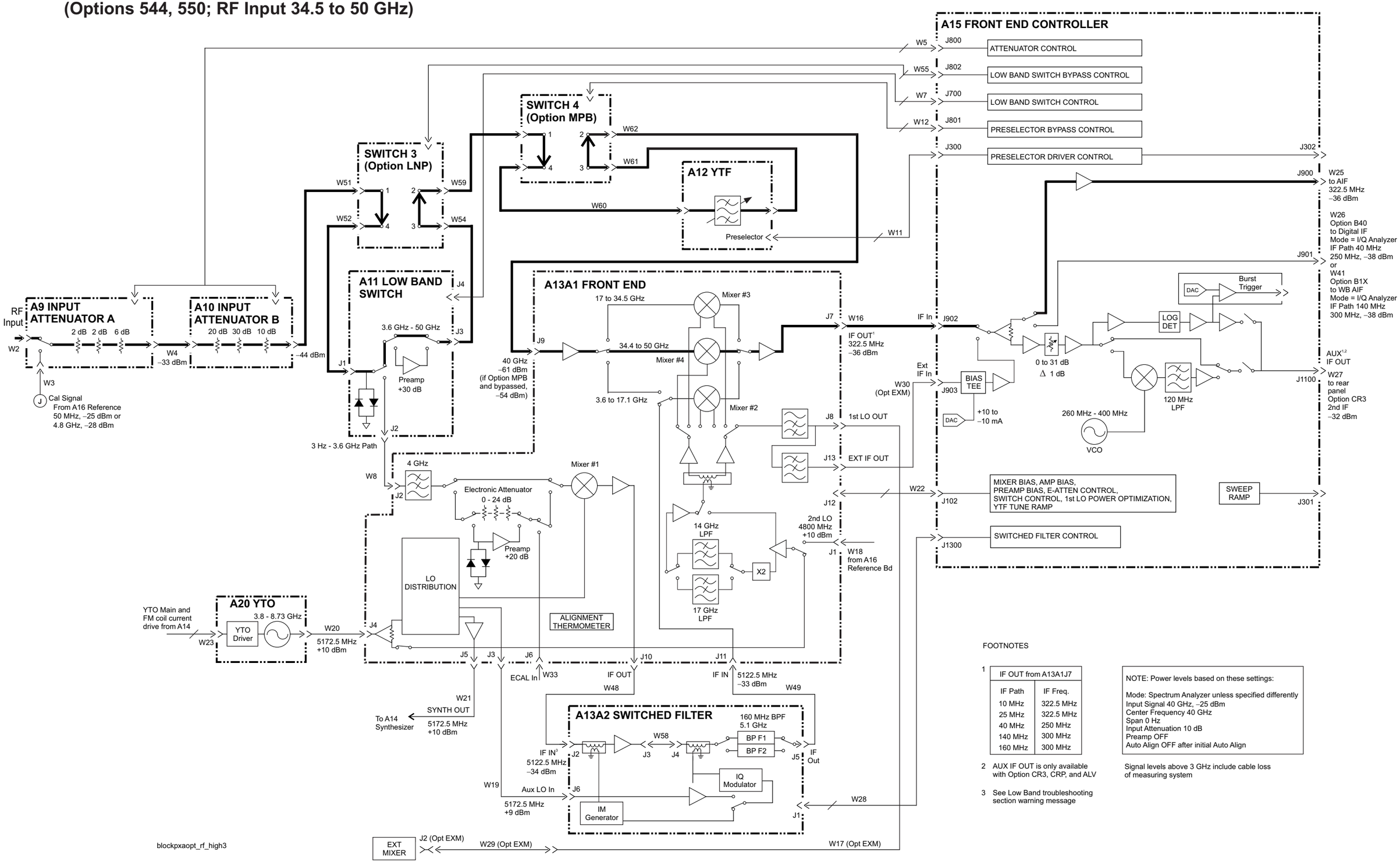

FOOTNOTES

1

IF OUT from A13A1J7	
IF Path	IF Freq.
10 MHz	322.5 MHz
25 MHz	322.5 MHz
40 MHz	250 MHz
140 MHz	300 MHz
160 MHz	300 MHz

2 AUX IF OUT is only available with Option CR3, CRP, and ALV

3 See Low Band troubleshooting section warning message

NOTE: Power levels based on these settings:

Mode: Spectrum Analyzer unless specified differently
Input Signal 40 GHz, –25 dBm
Center Frequency 40 GHz
Span 0 Hz
Input Attenuation 10 dB
Preamp OFF
Auto Align OFF after initial Auto Align

Signal levels above 3 GHz include cable loss of measuring system

RF/µW Low Band Path Option EP0 and B2X Block Diagram
(Options 503, 508, 513, 526; RF Input 3 Hz to 3.6 GHz)

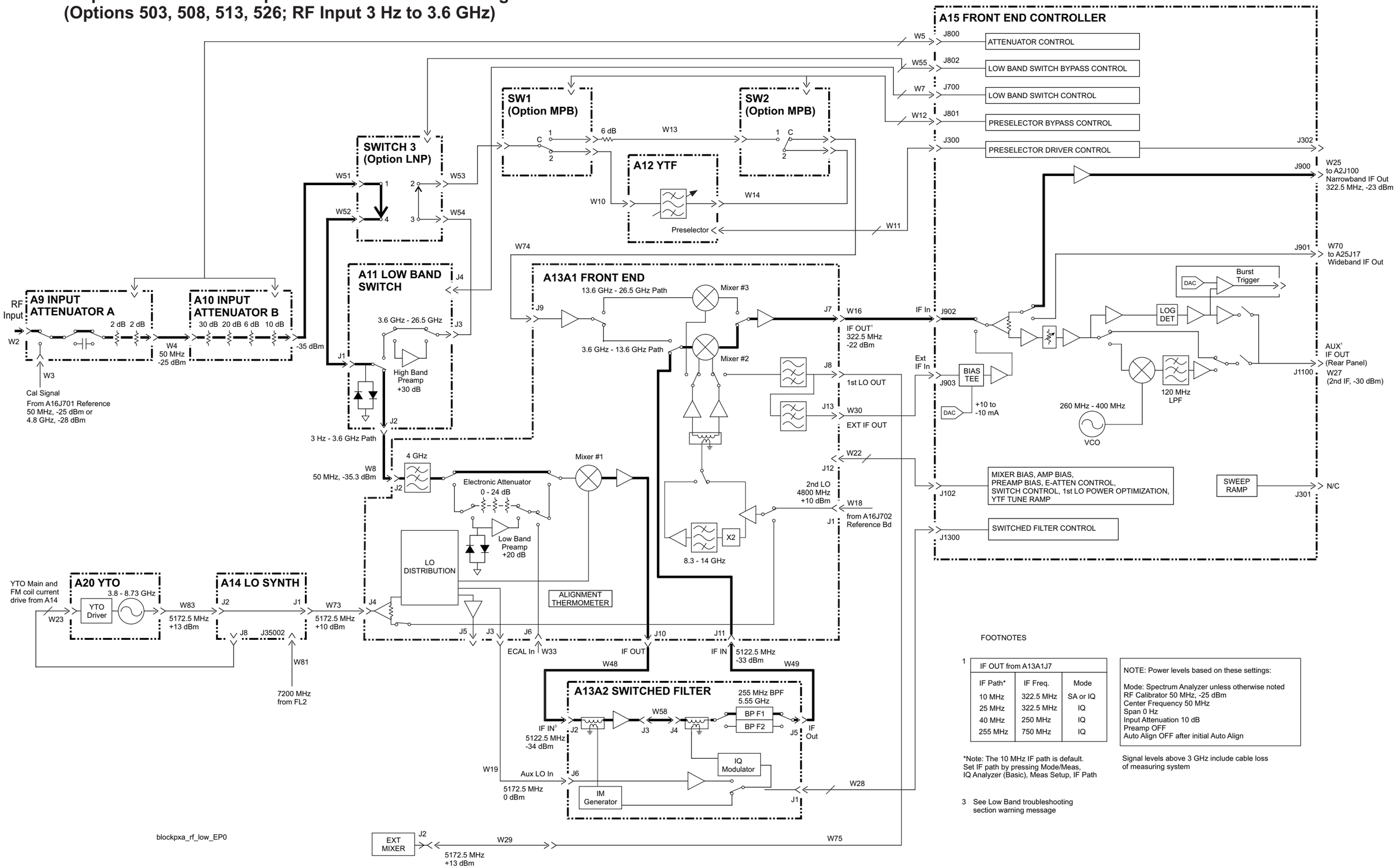

blockpxa_rf_low_EP0

FOOTNOTES

1

IF OUT from A13A1J7		
IF Path*	IF Freq.	Mode
10 MHz	322.5 MHz	SA or IQ
25 MHz	322.5 MHz	IQ
40 MHz	250 MHz	IQ
255 MHz	750 MHz	IQ

*Note: The 10 MHz IF path is default. Set IF path by pressing Mode/Meas, IQ Analyzer (Basic), Meas Setup, IF Path

3 See Low Band troubleshooting section warning message

NOTE: Power levels based on these settings:

Mode: Spectrum Analyzer unless otherwise noted
RF Calibrator 50 MHz, -25 dBm
Center Frequency 50 MHz
Span 0 Hz
Input Attenuation 10 dB
Preamp OFF
Auto Align OFF after initial Auto Align

Signal levels above 3 GHz include cable loss of measuring system

RF/µW Low Band Path Option EP0 and B5X Block Diagram
(Options 503, 508, 513, 526; RF Input 3 Hz to 3.6 GHz)

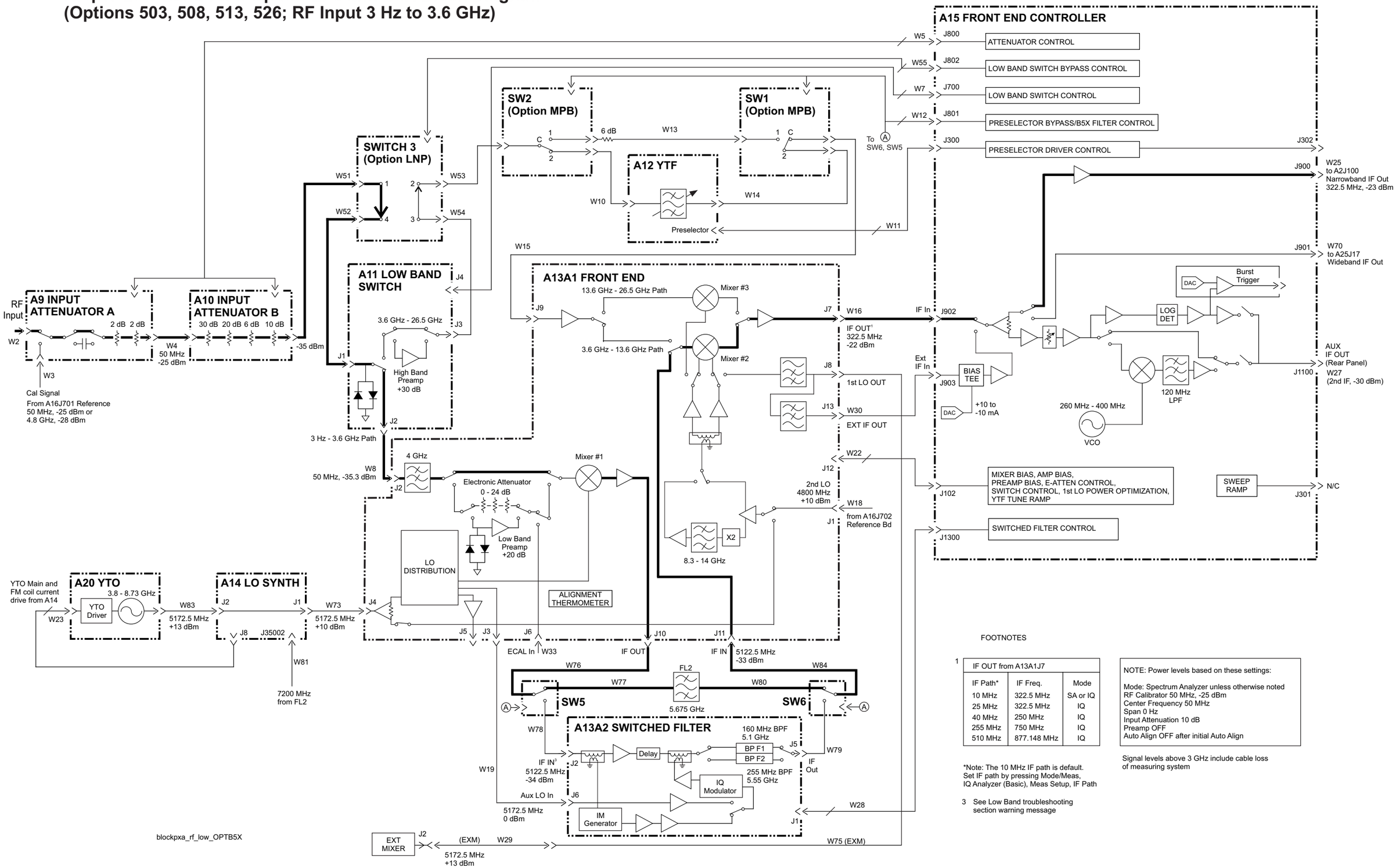

FOOTNOTES

1

IF OUT from A13A1J7		
IF Path*	IF Freq.	Mode
10 MHz	322.5 MHz	SA or IQ
25 MHz	322.5 MHz	IQ
40 MHz	250 MHz	IQ
255 MHz	750 MHz	IQ
510 MHz	877.148 MHz	IQ

*Note: The 10 MHz IF path is default. Set IF path by pressing Mode/Meas, IQ Analyzer (Basic), Meas Setup, IF Path

3 See Low Band troubleshooting section warning message

NOTE: Power levels based on these settings:

Mode: Spectrum Analyzer unless otherwise noted
RF Calibrator 50 MHz, -25 dBm
Center Frequency 50 MHz
Span 0 Hz
Input Attenuation 10 dB
Preamp OFF
Auto Align OFF after initial Auto Align

Signal levels above 3 GHz include cable loss of measuring system

mmW High Band Path #1 Option EP0 and B5X Block Diagram
(Options 544, 550; RF Input 3.6 to 17.1 GHz)

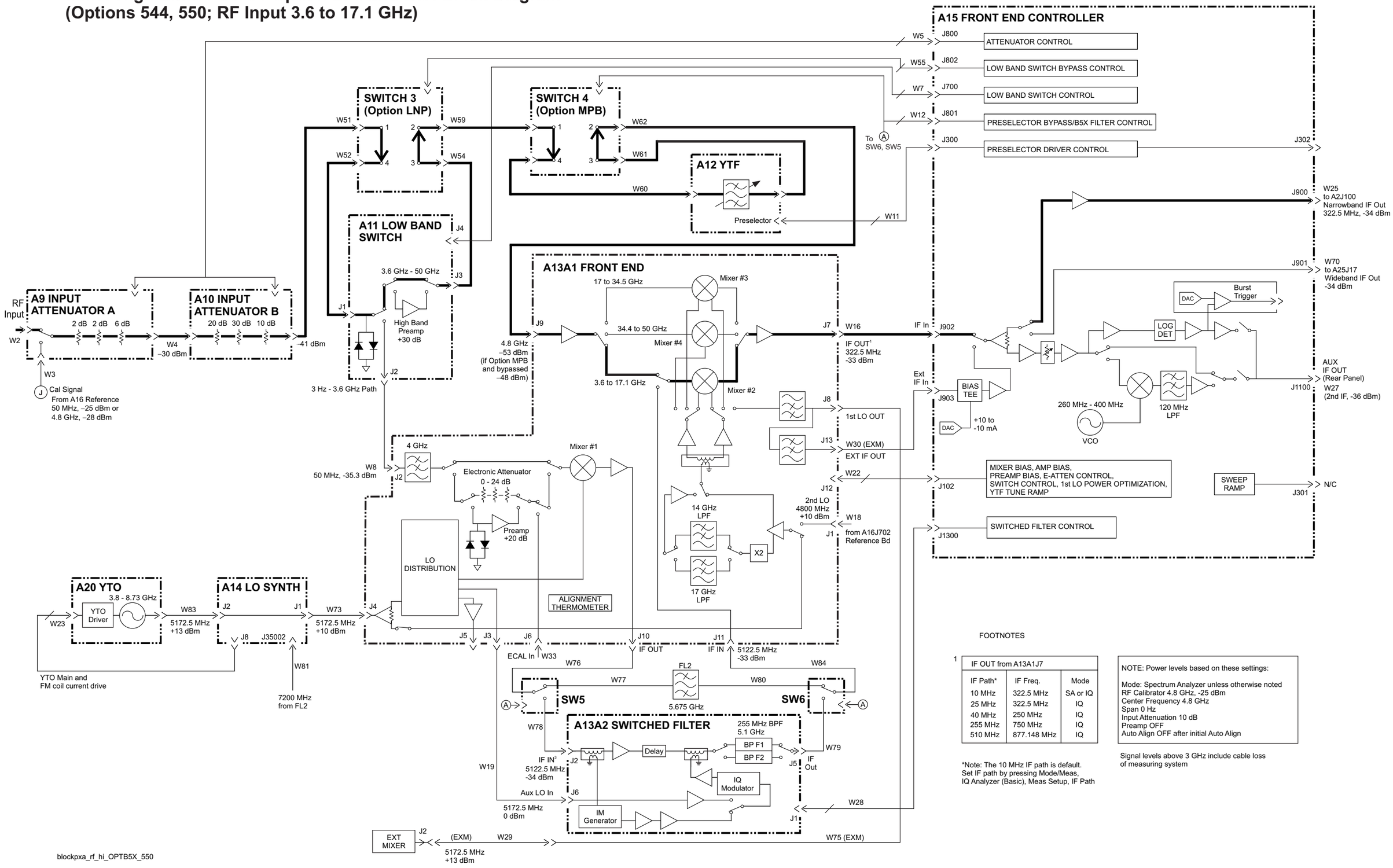

blockpxa_rf_hi_OPTB5X_550

FOOTNOTES

1

IF OUT from A13A1J7		
IF Path*	IF Freq.	Mode
10 MHz	322.5 MHz	SA or IQ
25 MHz	322.5 MHz	IQ
40 MHz	250 MHz	IQ
255 MHz	750 MHz	IQ
510 MHz	877.148 MHz	IQ

*Note: The 10 MHz IF path is default. Set IF path by pressing Mode/Meas, IQ Analyzer (Basic), Meas Setup, IF Path

NOTE: Power levels based on these settings:

Mode: Spectrum Analyzer unless otherwise noted
RF Calibrator 4.8 GHz, -25 dBm
Center Frequency 4.8 GHz
Span 0 Hz
Input Attenuation 10 dB
Preamp OFF
Auto Align OFF after initial Auto Align

Signal levels above 3 GHz include cable loss of measuring system

Reference and LO Synthesizer Option EP1 Block Diagram

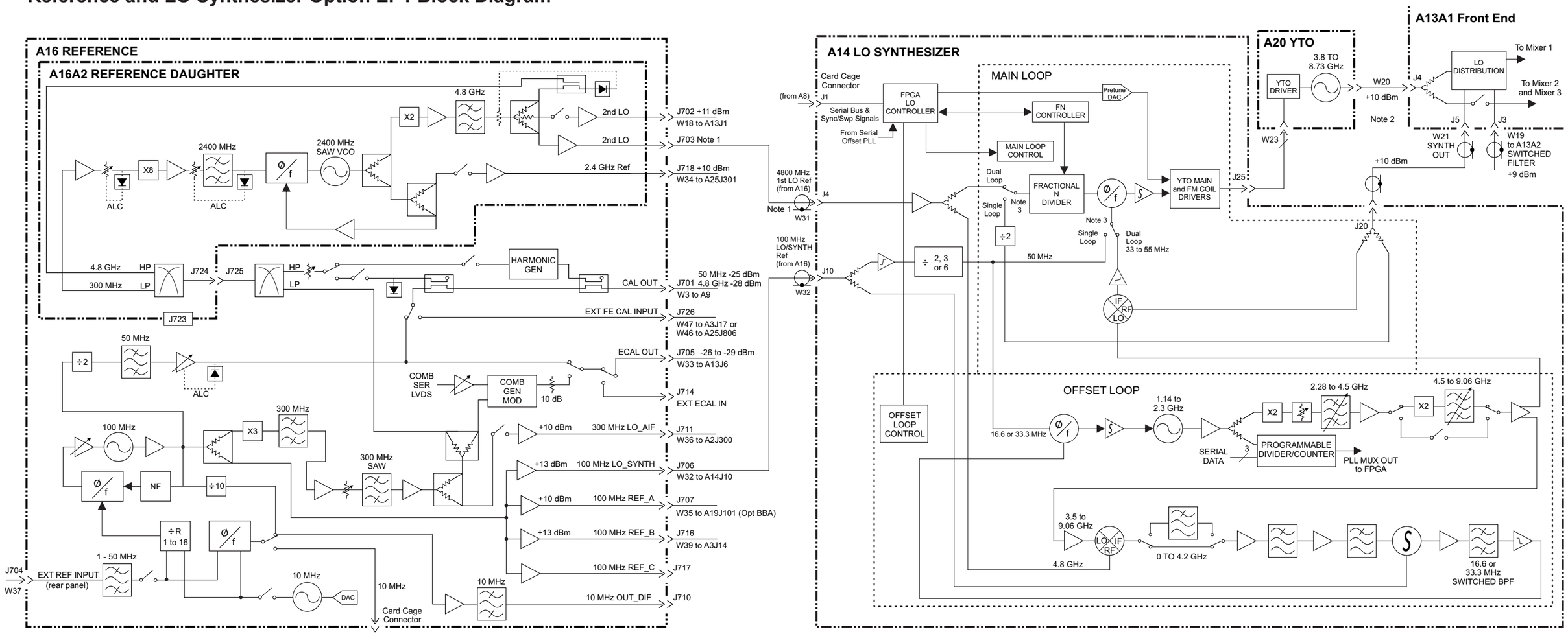

NOTES

1 Power Level is ~ +3 dBm in Dual-Loop mode and ~ -20 dBm in Single-Loop mode.

2 The Tuning Equation below shows the relationship between the YTO frequency (1st LO) and the Tuned Frequency.

Band	Tuning Equation
0 - 3.6 GHz	YTO = Tuned Freq + 5.1225 GHz
3.6 - 8.4 GHz	YTO = Tuned Freq + 322.5 GHz
8.4 - 13.6 GHz	YTO = (Tuned Freq + 322.5 MHz) / 2
13.6 - 17.1 GHz	YTO = (Tuned Freq + 322.5 MHz) / 2
17.1 - 26.5 GHz	YTO = (Tuned Freq + 322.5 MHz) / 4
26.4 - 34 GHz	YTO = (Tuned Freq + 322.5 MHz) / 4
34 - 50 GHz	YTO = (Tuned Freq + 322.5 MHz) / 8

3 When autocoupled, spans > 10 MHz are Single-Loop spans and $\leq$ 10 MHz are Dual-Loop spans.

DDS LO Synthesizer Option EPO Block Diagram

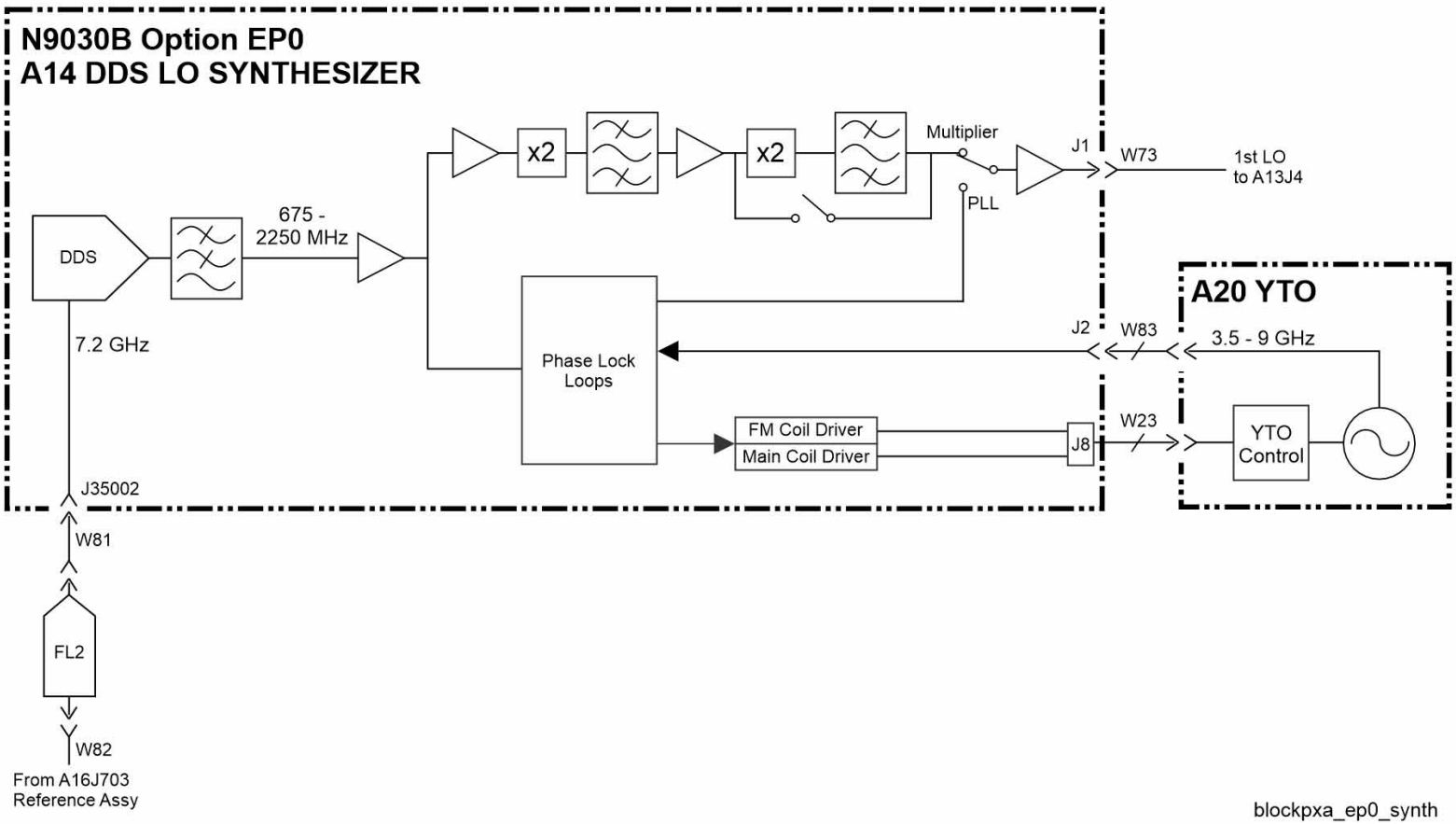

Analog IF Block Diagram

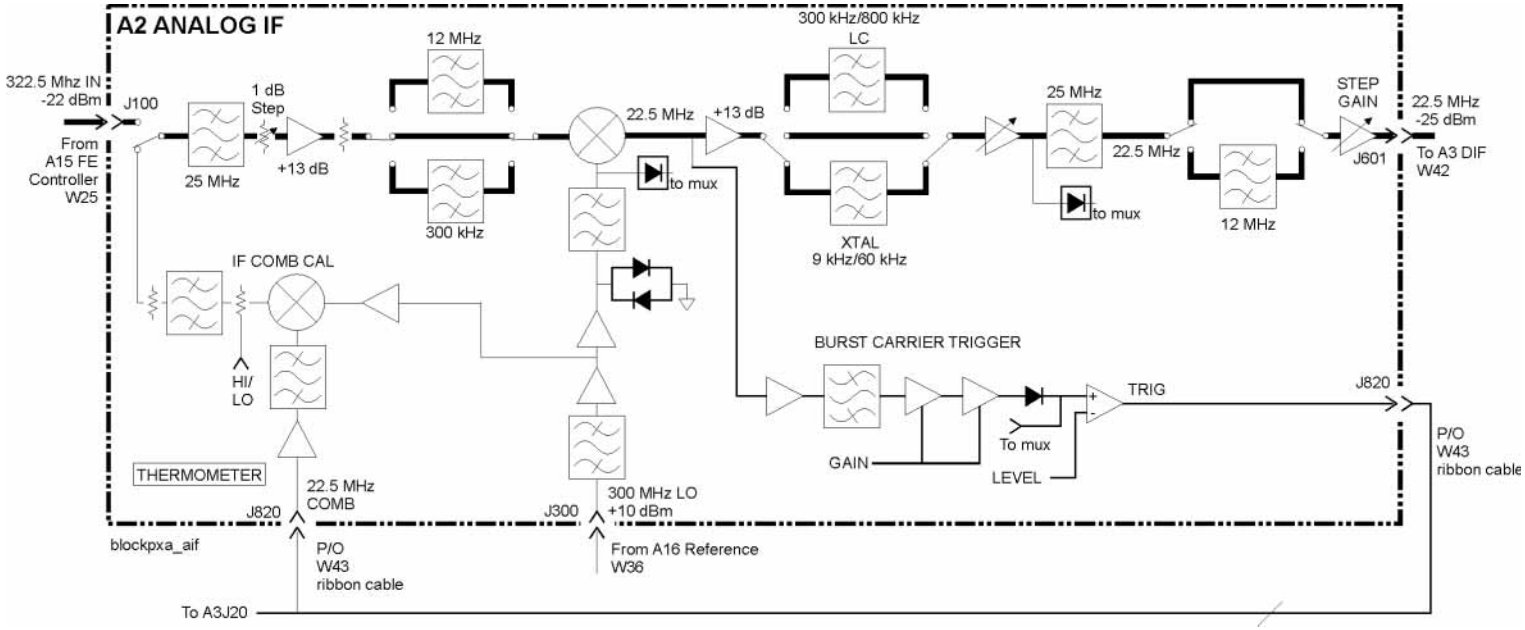

Wideband Analog IF Option B1X or B85 Block Diagram

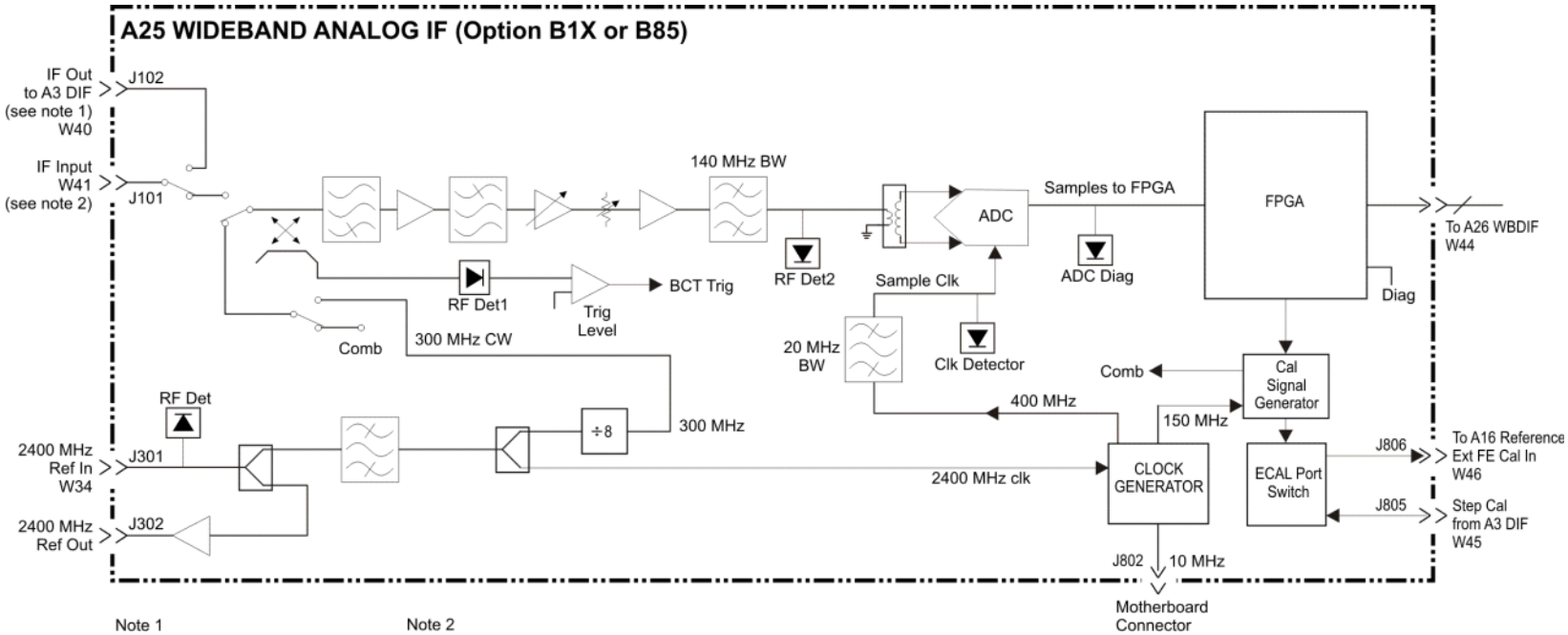

Note 1

IF Path	J102 Frequency
85/160 MHz	Not connected
40 MHz	250 MHz

Note 2

IF Path	W41 Frequency
40 MHz	250 MHz
85 MHz	300 MHz
160 MHz	300 MHz

Wideband Analog IF Option B2X and B5X Block Diagram

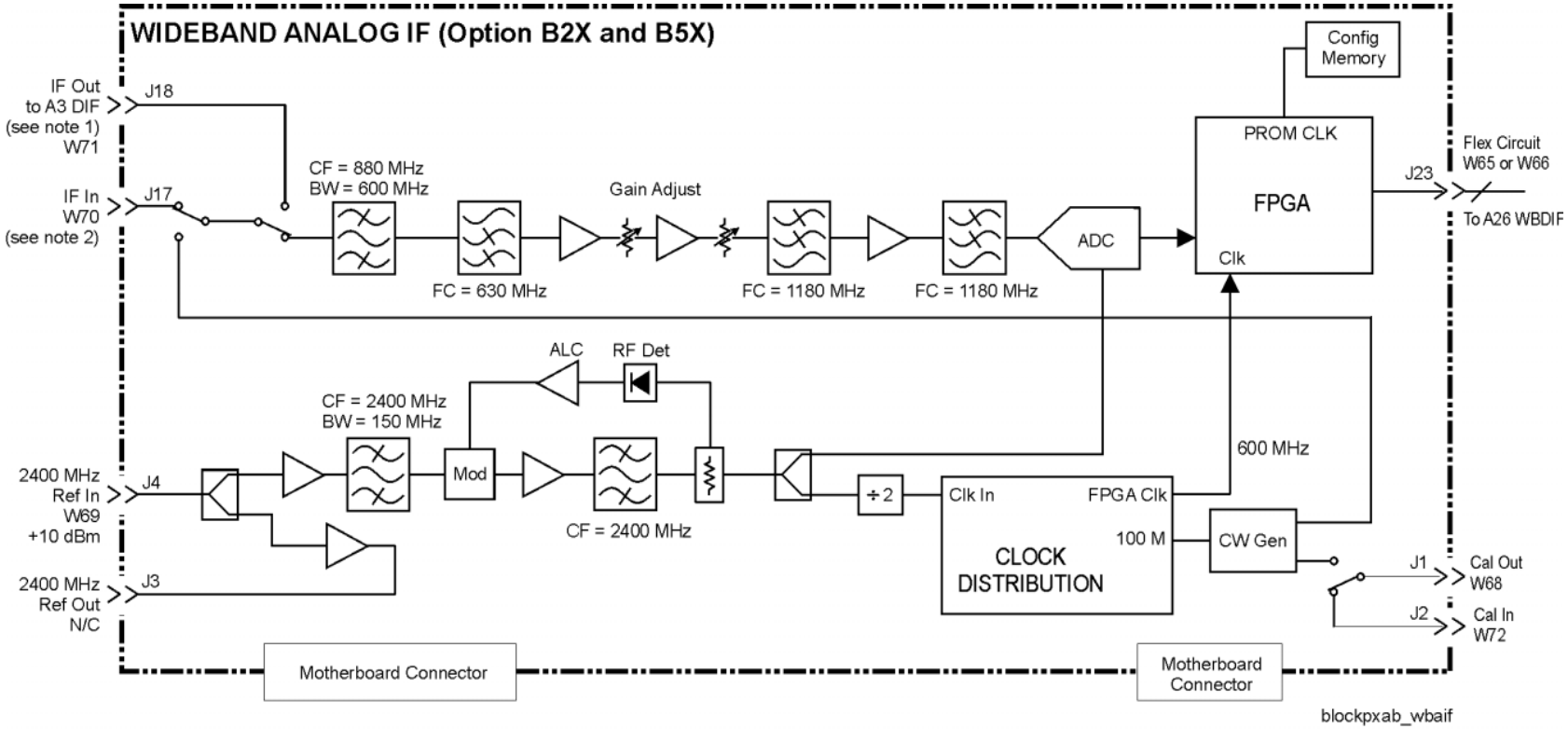

Note 1

IF Path	J18 Frequency
255, 510 MHz	n. c.
40 MHz	250 MHz

Note 2

IF Path	J17 Frequency
40 MHz	250 MHz
255 MHz	750 MHz
510 MHz	877.148 MHz

Digital IF Block Diagram

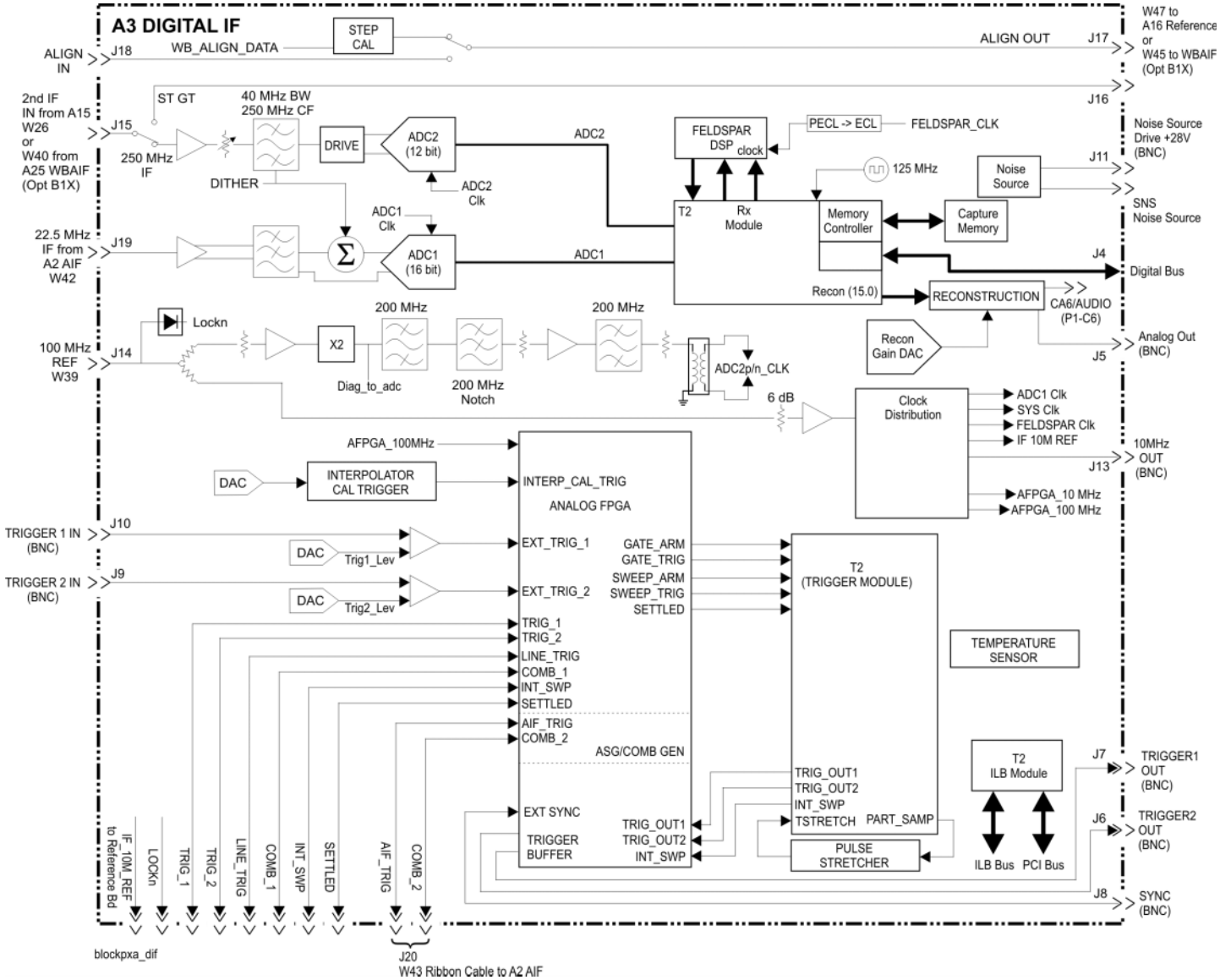

Computer Block Diagram

POWER SUPPLY, CPU, MIDPLANE, MOTHERBOARD, FRONT PANEL BLOCK DIAGRAM

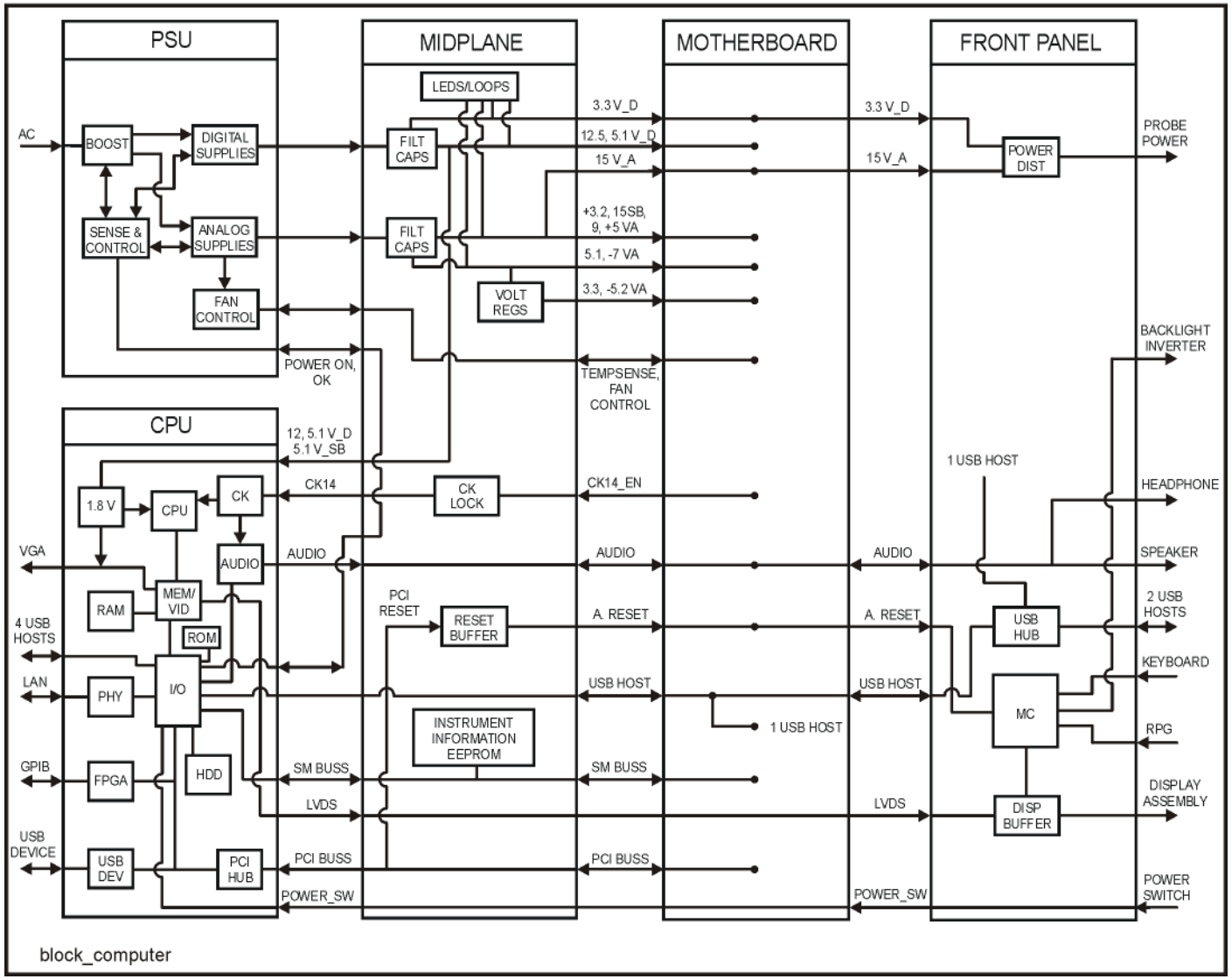

Block Diagrams

16 Service and Diagnostics Menus

Overview

The Service capabilities described below are accessed via the Service and Diagnostic menus in the System menu. The Service capabilities are intended for field service technicians. These technicians may be at an Keysight Service Center or at a self-maintaining customer site.

There are two types of Service capabilities:

1. Diagnostics - These are available to any user and will assist in initial troubleshooting of instrument malfunctions. Examples are the ability to read the mechanical relay cycles.
2. Service Functions - These are for use by the factory or field repair technicians, access is controlled. Examples are the ability to band lock the analyzer and control the DAC which sets the 10 MHz Reference frequency.

Controlling Access

There are two levels of service and diagnostics capabilities:

1. “Regular access” to diagnostic capabilities that everyone is allowed access. Care may be required to use a feature appropriately. This is the “Diagnostic” type of Service capability defined above.
2. “Secure service access” to the Service menu. This prevents the casual user from accessing and using these features. It is intended to provide this access to Keysight Service Centers or any customer who purchases the Service Guide. The “Service Functions” type of Service capability is defined above.

To access secured service capabilities the technician is required to enter a specific numeric Service Code that is controlled by the instrument software. The Service Code is defined to be easily entered via the front panel; an external keyboard or mouse will not be required. Once access has been gained, it persists within the execution of the instrument application. If the user exits the instrument application, they must re-enter the Service Code to gain access.

Secure service access

To access the secure service capabilities press **System, More, Service** with the instrument application running. At this point you will see the window shown in Figure 16-1. Enter the Service Code and press **Enter**.

The Service Code is: -2061

Figure 16-1 Service Code Entry

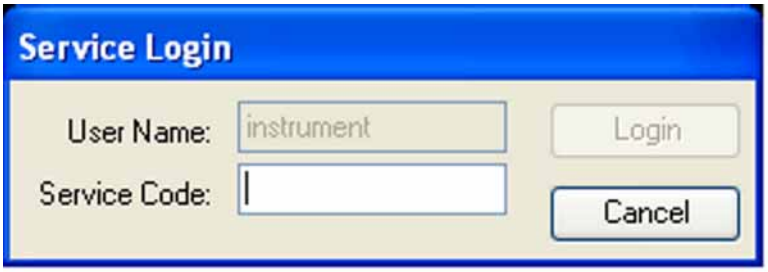

Menus

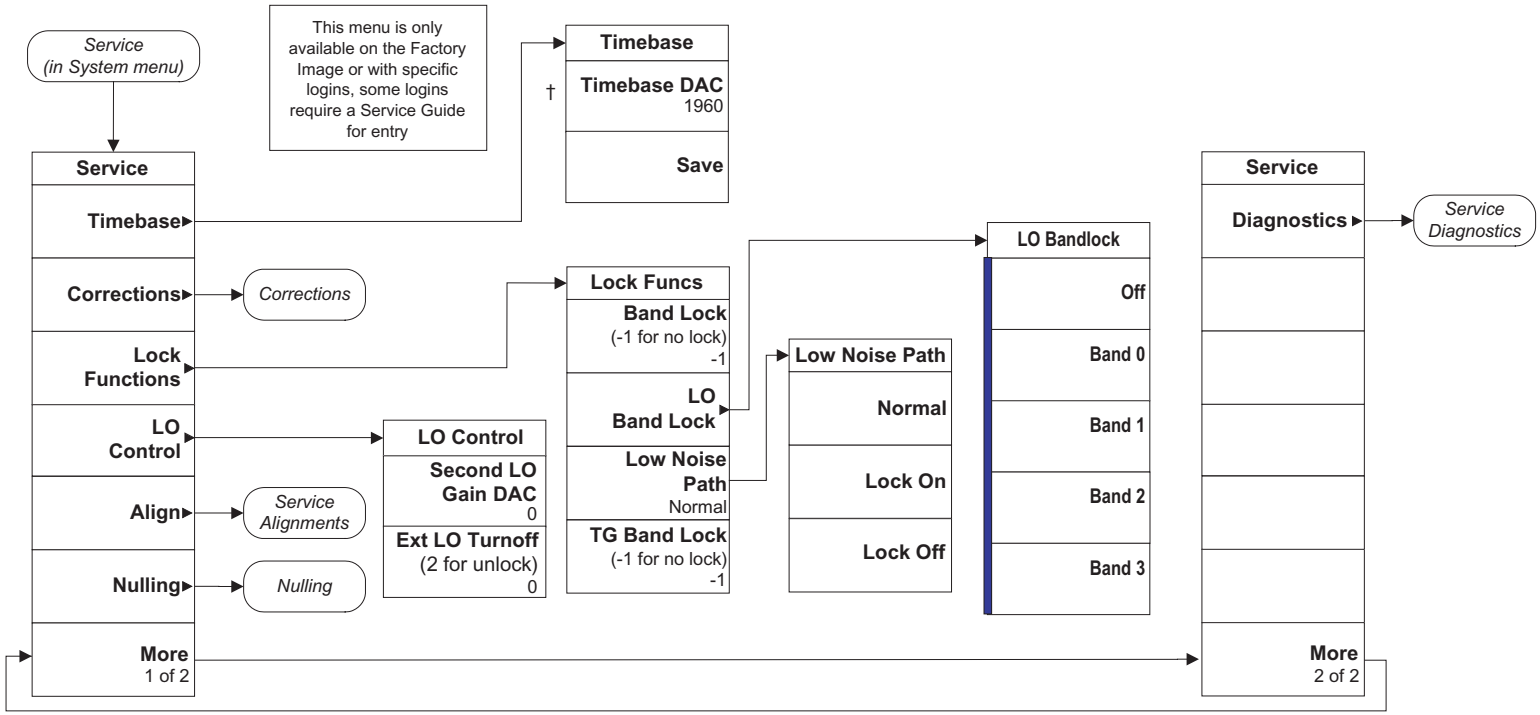
Service
(in System menu)
This menu is only available on the Factory Image or with specific logins, some logins require a Service Guide for entry
Service
Timebase
Corrections
Lock Functions
LO Control
Align
Nulling
More
1 of 2
Corrections
Service Alignments
Nulling
Timebase
†
Timebase DAC
1960
Save
Lock Funcs
Band Lock
(-1 for no lock)
-1
LO Band Lock
Low Noise Path
Normal
TG Band Lock
(-1 for no lock)
-1
LO Control
Second LO Gain DAC
0
Ext LO Turnoff
(2 for unlock)
0
Low Noise Path
Normal
Lock On
Lock Off
LO Bandlock
Off
Band 0
Band 1
Band 2
Band 3
Service
Diagnostics
Service Diagnostics
More
2 of 2

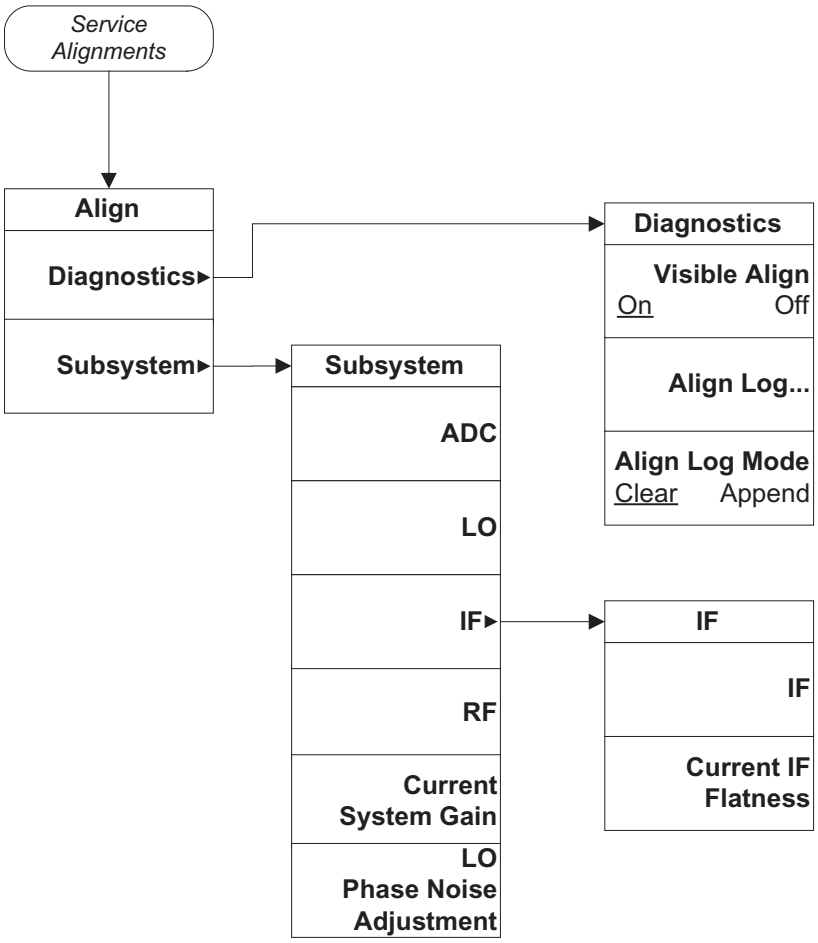
Service Alignments
Align
Diagnostics
Subsystem
Diagnostics
Visible Align
On
Off
Align Log...
Align Log Mode
Clear
Append
Subsystem
ADC
LO
IF
RF
Current System Gain
LO Phase Noise Adjustment
IF
IF
Current IF Flatness

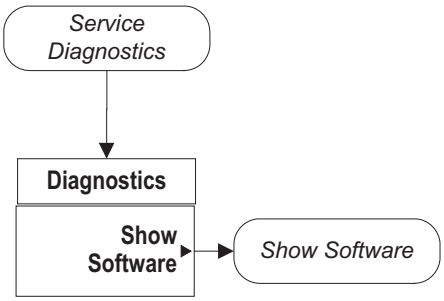
Service
Diagnostics
Diagnostics
Show
Software
Show Software

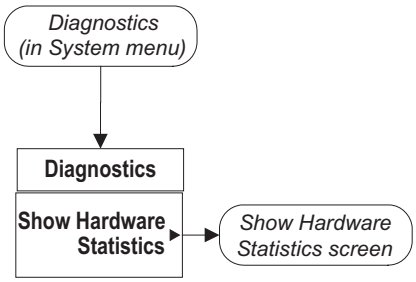
Diagnostics
(in System menu)
Diagnostics
Show Hardware
Statistics
Show Hardware
Statistics screen

Figure 16-2 Hardware Statistical Information

Hardware Statistical Information
PXA Signal Analyzer
Product Number: N9030A
Serial Number: US00072107
Instrument S/W Revision: A.04.00_R0014
Revision Date: 9/11/2009 3:07:02 PM

Component Name	Value
MechAtten #1 Count Total	98478
Calibrator Switch Cycles	6287
AC/DC Switch Cycles	20788
2 dB #1 Mechanical Atten Cycles	35385
2 dB #2 Mechanical Atten Cycles	36018
MechAtten #2 Count Total	118195
6 dB Mechanical Atten Cycles	25182
10 dB Mechanical Atten Cycles	22298
20 dB Mechanical Atten Cycles	38647
30 dB Mechanical Atten Cycles	32068
Low Noise Path Switch	11562
Preselector Bypass Cycles	4364
High temperature operating extreme	65.25
Low temperature operating extreme	11.5
Elapsed Time (On-Time)(hours)	611

Service Key Descriptions

Timebase

Allows the technician to adjust the 10 MHz reference (“timebase”) manually.

NOTE If the Timebase DAC value has been changed, but no Save operation performed before exiting this menu, a warning is provided to the user that they have not saved their setting:

Timebase DAC

Allows the technician the ability to adjust the 10 MHz reference (“timebase”). The adjustment is performed by changing the DAC setting controlling the reference. Once the reference is adjusted to the proper frequency, the DAC value can be saved in non-volatile memory by pressing the Save menu key.

Save

Saves the current Timebase DAC setting in the appropriate cal file. The operator is presented a prompt to confirm the operation:

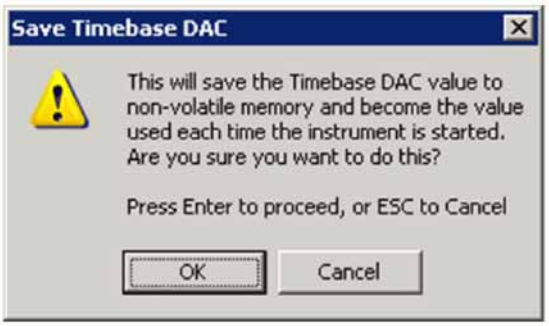

Corrections

The Corrections menu allows the technician to activate and deactivate specific amplitude correction sets. With this capability, the technician can determine if an anomaly is a result of raw hardware performance or incorrect correction data. It also allows the technician the ability to measure the raw hardware performance when all corrections are set to Off.

RF Flatness

Displays a menu which allows the technician to activate and deactivate the corrections unique to the RF flatness of the analyzer. RF Flatness corrections consist of two major parts: raw flatness corrections and temperature corrections. These corrections are summed together and applied by using RF gain, IF gain, and/or “video shift” (post-digitized mathematical offset). The selections in this menu allow the corrections to be applied or not applied to facilitate troubleshooting the cause of flatness-related problems.

Flatness Video Shift On/Off

The Flatness Video Shift turns off the corrections for gain vs. frequency. It does not turn off the corrections for changes in the analog IF gain that accompany flatness changes. This function turns both the gain and video shift on or off, but does not affect the temperature corrections. When set to off, it is possible to measure the raw flatness of the spectrum analyzer while maintaining the temperature corrections.

When **Flatness Video Shift** is **Off**, the Advisory Event “Flatness Video Shift OFF” will be displayed.

When **Flatness Video Shift** is **ON**, the Advisory Event “Flatness Video Shift OFF” will be cleared.

Temperature Gain & Tilt On/Off

This function controls both temperature adjustment mechanisms: overall gain vs. temperature, and the temperature-proportional tilt of the gain vs. frequency.

When **Temperature Gain & Tilt** is **OFF**, the Advisory Event “Flatness Temperature Gain & Tilt OFF” will be displayed.

When **Temperature Gain & Tilt** is **ON**, the Advisory Event “Flatness Temperature Gain & Tilt OFF” will be cleared.

IF Flatness

This function turns the corrections related to IF flatness On or Off.

When **IF Flatness** is **OFF**, the Advisory Event “IF Flatness corrections OFF” will be displayed.

When **IF Flatness** is **ON**, the Advisory Event “IF Flatness corrections OFF” will be cleared.

Snapshot Alignments On/Off

During normal auto alignment operation, the firmware will perform an RBW and IQ alignment when the analyzer RBW state is changed, and every 10 minutes thereafter. These alignments can hinder troubleshooting the analyzer since they can change correction factors when the state is changed. Turning snapshot alignments off disables the RBW portion of these alignments for more accurate troubleshooting. (Use **IF Flatness ON/OFF** to control the IQ alignment.)

When **Snapshot Alignments** are **OFF**, the Advisory Event “Snapshot OFF” will be displayed.

When **Snapshot Alignments** are **ON**, the Advisory Event “Snapshot OFF” will be cleared.

I/Q Freq Response

This function turns the corrections related to I/Q Frequency Response On or Off. This is only available with the Baseband Analog I/Q option (BBA).

When **I/Q Frequency Response** is OFF, the Advisory Event “I/Q Freq Response corrections OFF” will be displayed.

When **I/Q Frequency Response** is ON, the Advisory Event “I/Q Freq Response corrections OFF” will be cleared.

I/Q Gain

This function turns the corrections related to I/Q Gain On or Off. This is only available with the Baseband Analog I/Q option (BBA).

When **I/Q Gain** is OFF, the Advisory Event “I/Q Gain corrections OFF” will be displayed.

When **I/Q Gain** is ON, the Advisory Event “I/Q Gain corrections OFF” will be cleared.

Band Lock

Provides the ability to tune the analyzer over as large a range as can be accommodated by the specified harmonic number and 1st LO frequency range. As a result, this feature can be used to check performance in the frequency band overlap regions. By definition, multi-band sweeps are not allowed.

When band lock is in effect the Advisory Event “Band Locked: Band <x>” where “x” is a value between 0 and 6.

When band lock is not in affect the Advisory Event “Band Locked: Band <x>” is cleared.

Dependencies/Couplings:

1. Band Lock is only available on analyzers with frequency range options beyond 3.6 GHz
2. The individual bands available for selection also depends upon the particular frequency range option.

Off

Turns Band Lock to Off. Analyzer will tune from band to band normally.

Band 0

Locks the analyzer to Band 0.

Band 1

Locks the analyzer to Band 1.

Band 2

Locks the analyzer to Band 2.

Band 3

Locks the analyzer to Band 3.

Band 4

Locks the analyzer to Band 4.

Band 5

Locks the analyzer to Band 5.

Band 6

Locks the analyzer to Band 6. The Band 6 key label can be different depending on which option is installed.

LO Band Lock

Provides the ability to tune the analyzer over as large a range as can be accommodated by the specified LO Band. As a result, this feature can be used to check performance in the LO band overlap regions. By definition, multi-band sweeps are not allowed.

When band lock is in effect the Advisory Event “LO Band Locked: Band <x>” where “x” is a value between 0 and 6.

When band lock is not in affect the Advisory Event “LO Band Locked: Band <x>” is cleared.

Dependencies/Couplings:

LO Bandlock will be grayed-out if Bandlock is OFF. If Harmonic Bandlock is any setting other than OFF, LO Bandlock menu key is enabled. If LO Bandlock is other than OFF, and the Harmonic Bandlock is transitioned to OFF, the LO Bandlock is set to OFF.

Off

Turns LO Band Lock to Off. Analyzer will tune from LO band to LO band normally.

Band 0

Locks the analyzer to LO Band 0.

Band 1

Locks the analyzer to LO Band 1.

Band 2

Locks the analyzer to LO Band 2.

Band 3

Locks the analyzer to LO Band 3.

Low Noise Path

Provides the ability to lock the Option LNP Low Noise Path switch that is used in the µWave Path Control menu into the ON position, regardless of the state of the µWave Path Control menu or functions. The low noise path flatness corrections are applied.

NOTE

In normal operation the Low Noise Path and the Microwave Preselector Bypass (Option MPB) cannot be turned on at the same time. This is done to protect the High Band mixer from excessive power.

WARNING

Assure the mixer power is < -10 dBm
(mixer power = input power - input attenuation)

LO Control

Provides keys that allow you to control the LO. This is only present on analyzers equipped with Opt EXM, External Mixing.

2nd LO Gain DAC

This parameter provides the ability to adjust the output gain of the 2nd LO DAC. The range is from 0 to 4095 where 0 is the minimum gain and 4095 is the maximum gain. Setting a value of 4096 or greater returns control to the instrument. In External Mixing, this DAC controls the level of the 1st LO signal at the front panel EXT MIXER connector.

External LO Turnoff

Disconnects the 1st LO path which will minimize the effect of the 1st LO signal at the front panel EXT MIXER connector.

Align

The Align Menu allows accessing Diagnostic capabilities of Alignment, and invoking alignments for individual subsystems.

Diagnostic

The Diagnostic menu contains items for controlling the operating behavior of Alignment and the Alignment reporting capabilities.

Visible Align

Controls the state of Visible Align. Visible Align replaces the “Aligning 1 or X” messages with descriptive messages describing the alignment piece begin executed.

Align Log...

Invokes Notepad with the Alignment Log loaded. The log can be viewed or saved to an external media or drive. Notepad can be closed without a mouse or external keyboard by pressing ALT front-panel key, then arrow down to highlight Exit, then press Enter.

Align Log Mode

The Alignment System places information about the last alignment performed into a log. The log can be configured to operate in clear or append mode. In clear mode the log only contains information on the last alignment performed; the log is cleared with each alignment performed. In append mode each new alignment appends to the log. In append mode, care must be taken by the operator to not allow the log to grow to a size so large as to inhibit system operation.

Subsystem

The Subsystem menu allows invoking individual components of the internal alignments.

ADC

Immediately executes an alignment of the ADC subsystem. The instrument will stop any measurement currently underway, perform the alignment, then restart the measurement from the beginning.

A failure of ADC will set the Error Condition “Align ADC failed”. A failure will not employ new ADC alignment data.

Successful completion of ADC will clear the Error Condition “Align ADC failed”.

The Advisory Event “Alignment complete” is displayed when the alignment is complete.

Align ADC can be interrupted by pressing the Cancel (ESC) front-panel key. When this occurs, no new ADC alignment data will be employed.

LO

Immediately executes an alignment of the LO subsystem. The instrument will stop any measurement currently underway, perform the alignment, then restart the measurement from the beginning.

A failure of LO will set the Error Condition “Align LO failed”. A failure will not employ new LO alignment data.

Successful completion of LO will clear the Error Condition “Align LO failed”.

The Advisory Event “Alignment complete” is displayed when the alignment is complete.

Align LO can be interrupted by pressing the Cancel (ESC) front-panel key. When this occurs, no new LO alignment data will be employed.

IF

Immediately executes an alignment of the IF subsystem. The instrument will stop any measurement currently underway, perform the alignment, then restart the measurement from the beginning.

A failure of IF will set the Error Condition “Align IF failed”. A failure will not employ new IF alignment data.

Successful completion of IF will clear the Error Condition “Align IF failed” and clear bit 6 in the Status.

The Advisory Event “Alignment complete” is displayed when the alignment is complete.

Align IF can be interrupted by pressing the Cancel (ESC) front-panel key. When this occurs, no new IF alignment data will be employed.

Current IF Flatness

Immediately executes an alignment of the Current IF Flatness, for the purpose of improving the absolute amplitude accuracy within FFT Sweeps and improving the group delay in some digital demodulation measurements. The instrument will stop any measurement currently underway, perform the alignment, then restart the measurement from the beginning.

The Advisory Event “Alignment complete” is displayed when the alignment is complete.

Align Current IF Flatness can be interrupted by pressing the **Cancel (ESC)** front-panel key. When this occurs, no new Current IF Flatness alignment data will be employed.

RF

This is exactly the same as the customer accessible Align Now, RF with one exception: the alignment can be invoked even if a previous Align Now, All has not been executed (this key is not grayed-out if using default alignment data). See description of Align Now, RF in the User's Guide.

Current System Gain

Immediately executes an alignment of the Current System Gain, for the purpose of improving small amplitude variations that occur as resolution bandwidth is switched. This alignment is done by measuring the response of the current system state configuration to the 50 MHz amplitude reference signal. All subsequent measurements are then compensated appropriately for absolute amplitude accuracy. The instrument will stop any measurement currently underway, perform the alignment, then restart the measurement from the beginning.

The Advisory Event “Alignment complete” is displayed when the alignment is complete.

Align Current System Gain can be interrupted by pressing the Cancel (ESC) front-panel key. When this occurs, no new Current System Gain alignment data will be employed.

LO Phase Noise Adjustment

Immediately executes an optimization for LO Phase Noise. When the optimization is finished the value is stored in non-volatile memory. The instrument will stop any measurement currently underway, perform the alignment, and then restart the measurement from the beginning (similar to pressing the **Restart** key).

Nulling

The hardware is capable of nulling (cancelling) the LO Feedthru, intermodulation products, or neither. It is physically not capable of nulling both at the same time.

LO Feedthru Nulling

Control is available to set the state of LO Feedthru nulling ON or OFF. In the ON state, the software will determine when it is appropriate to null the LO Feedthru. LO nulling is only available in low band.

Intermod Nulling

Control is available to set the state of Intermod Nulling On or OFF. In the ON state, the software will determine when it is appropriate to null the intermodulation products. IM nulling is only available in low band.

Diagnostics

Pressing Diagnostics in the Service Menu brings up the Service Diagnostics submenu. The functions in this menu allow the technician to do more detailed, lower-level troubleshooting.

Show Software

The Show Software screen displays revision information for Keysight internal software that comprises the embedded application and programmable hardware devices (FPGAs and PLDs).

Figure 16-3 Example Screen

Software Assembly Name	Version
AcprMeasurement	1.3.47921.24555
ADemodApplication	1.3.47921.24555
ADemodLogicalLicense	1.0.1.1
ADemodMeasurement	1.3.47921.24555
ADemodPhysicalLicense	1.0.1.1
Agilent.Cdf.Api	3.5.12601.11917
Agilent.Cdf.DataAccess	2.2.9815.12243
Agilent.CommonBaseband.HWControl	2.6.9.0
Agilent.Lxi.LxiEventWrapper	1.0.6.0
Agilent.Physics	11.4.0.0
Agilent.Physics.AbortHandler	11.4.12.0
Agilent.Physics.CodeTimer	0.20.1.0
Agilent.Physics.LogicalHardware	11.4.12.0
Agilent.PhysicsServer	11.4.12.0
Agilent.PhysicsServices	0.20.1.0
Agilent.SA.Application	1.3.47921.24555
Agilent.SA.Application.ResourceCatalog	1.3.47921.24555
Agilent.SA.BackusDsp	3.14.0.0
Agilent.SA.BaseInst.ResourceCatalog	1.3.47921.24555
Agilent.SA.BaseInterfaces	1.3.47921.24555
Agilent.SA.Data	3.5.12601.11917
Agilent.SA.Dsp	1.3.47921.24555
Agilent.SA.DynamicTypes	0.0.0.0
Agilent.SA.GPSA.ResourceCatalog	1.3.47921.24555
Agilent.SA.GpsaCommon	1.3.47921.24555
Agilent.SA.GpsaDisplay	1.3.47921.24555
Agilent.SA.GpsaEngine	1.3.47921.24555
Agilent.SA.GPSAMeasurement	1.3.47921.24555
Agilent.SA.GpsaTypes	1.3.47921.24555
Agilent.SA.Graph	1.3.47921.24555
Agilent.SA.Graph.DrawEngine	1.2.3573.17385
Agilent.SA.GuiLibrary	1.3.47921.24555
Agilent.SA.HardwareLogicalLicenses	1.0.2.2
Agilent.SA.Hooks	3.5.12601.11917
Agilent.SA.IACUI	1.3.47921.24555
Agilent.SA.InstInterfaces	1.3.47921.24555

The software name is left justified, with the revision information right justified. This is a multi-page list with Next Page and Previous Page menu key control in accordance with other text screens (Show Systems, Show Errors, etc.).

Show Hardware Screen

Press **System**, **Show**, **Hardware**

Keysight Technologies
N9030B PXA Signal Analyzer

Service Guide

17 Replaceable Parts

What You Will Find in This Chapter

The following information is found in this chapter:

1. Part number tables for assemblies, mechanical parts, cables, front panel connectors, and labels.
2. Part location diagrams for the following:

Figure 17-1, “Major Assemblies” page 401
Figure 17-2, “External Hardware” page 402
Figure 17-3, “CPU Assembly (Option PCA)” page 403
Figure 17-4, “CPU Assembly (Option PC6, PC6S, and PC8)” page 404
Figure 17-5, “Disk Drive Tray Assembly (Option PC6, PC6S, and PC8)” page 405
Figure 17-6, “Top Brace and Reference Bracket” page 406
Figure 17-7, “RF Area (Options 503, 508, 513, 526)” page 407
Figure 17-8, “RF Area (Options 503, 508, 513, 526) with Options LNP and MPB Switches” page 407
Figure 17-9, “RF Area (Options 544, 550)” page 410
Figure 17-10, “Front End Parts (Options 503, 508, 513, 526, EP1)” page 412
Figure 17-11, “Front End Parts (Options 544, 550, EP1)” page 413
Figure 17-12, “Front End Parts (Options 503, 508, 513, 526, EP0, B2X)” page 414
Figure 17-13, “Front End Parts (Options 544, 550, EP0, B2X)” page 415
Figure 17-14, “Front End Parts (Options 544, 550, EP0, B5X)” page 416
Figure 17-15, “Front End Cables (A14 Synthesizer shown is Option EP1)” page 418
Figure 17-16, “Synthesizer Assembly Cables (Option EP0)” page 420
Figure 17-17, “Reference Assembly Cables (Option EP1)” page 421
Figure 17-18, “Reference Assembly Cables (Option EP0), and Wide Bandwidth Analog IF Cables (Option B2X, B5X)” page 422
Figure 17-19, “AIF Cables” page 424
Figure 17-20, “DIF Cables” page 424

Figure 17-21, “AIF/DIF Assemblies” page 426
Figure 17-22, “WBDIF Extension Board - Option RTS” page 427
Figure 17-23, “Motherboard” page 428
Figure 17-24, “Chassis” page 429
Figure 17-25, “Fan Hardware” page 430
Figure 17-26, “Input Connector” page 431
Figure 17-27, “Front Frame Parts” page 432
Figure 17-28, “Front Frame Exploded View” page 433

How to Order Parts

To order an assembly or mechanical part listed in this chapter, go to:

https://www.keysight.com/find/parts

If you do not have web access, or the parts you are interested in cannot be found in the parts list provided, contact your local Keysight Technologies sales and service office with the following information:

- Product model number
- Product serial number
- Description of where the part is located, what it looks like, and its function (if known)
- Quantity required

For a list of Keysight Technologies sales and service office locations, refer to "Contacting Keysight Technologies" on page 29.

Replaceable Parts

Replaceable Parts

Some of the assemblies listed in the following table are related to options that are available with the PXA Signal Analyzer. These options are described below.

Table 17-1 All Replaceable Parts

Reference Designator	Description	Part Number
A1A1	Front Frame Assembly Replacement Kit[a] Includes:	N9020-60299
	Front Frame	n/a
	USB Ground Spring	N9020-20258
	Braided gasket	8160-0660
	EMI Gasket	8160-1997
	Front Frame Side Trim Strips (2 included)	N9020-40018
	Side Trim, Phantom Gray (2 included)	5041-7905
	Top Trim Strip	N9020-40005
	Cover Plate	N9020-00002
	Display Boot	N9020-40002
	Hole Plug, 0.25 inch (2 included)	6960-0076
	Overlay, Main Keyboard	N9020-80127
	Overlay, Solid Left	N9020-80164
	Overlay, BBIQ Bottom	N9020-80166
	Overlay, BBIQ top	N9020-80163
A1A2	Front Panel Controller Board	
	Serial Number ≥MY/SG/US62490400	N9020-63296
	Serial Number <MY/SG/US62490400	N9020-60268[b]
A1A3	Liquid Crystal Display 10.6-in w/PCAP Touch 1280X768-Pixels	
	Serial Number ≥MY/SG/US62490400	2090-1158
	Serial Number <MY/SG/US62490400	N9020-60268[b]
A1A4	Main Keyboard	N9020-63275
A1A5	Main Keypad	N9020-40001
A1MP1	Overlay, Solid Left	N9020-80164
A1MP2	Overlay, Main Keyboard	N9020-80127

Replaceable Parts

Table 17-1 All Replaceable Parts

Reference Designator	Description	Part Number
A1MP3	Frequency Label, 3.6 GHz, Option 503	N9030-80063
A1MP4	Frequency Label, 8.4 GHz, Option 508	N9030-80064
A1MP5	Frequency Label, 13.6 GHz, Option 513	N9030-80065
A1MP6	Frequency Label, 26.5 GHz, Option 526	N9030-80066
A1MP7	Frequency Label, 44 GHz, Option 544	N9030-80067
A1MP8	Frequency Label, 50 GHz, Option 550	N9030-80068
A1MP9	Display Compression Pad	
	Serial Number ≥MY/SG/US62490400	N9020-40026
	Serial Number <MY/SG/US62490400	N9020-40003
A1MP10	Bracket Front Panel Shield	N9020-00064
A1MP11	Display Bracket, Front Panel	N9020-00078
A1MP13	RPG Knob	W1312-40179
A1MP14	Front Panel Shield	N9020-00066
A1MP15	Cable Clamp, for A1W1 Flex Circuit	1400-2219
A1MP16	Core Bracket	
	Option BBA - Top	N9020-00071
	Option BBA - Bottom	N9020-00072
A1MP17	Overlay, BBIQ Bottom, Option BBA	N9020-80166
A1MP18	Overlay, BBIQ Top, Option BBA	N9020-80163
A1MP19	Overlay, Audio Input, Option 107	N9030-80062
A1MP20	Cover Plate, Audio Input, Option 107	N9030-00004
A1W1	Flex Circuit, Display to Front Panel Control Board	N9020-60273
A1W2	Cable Assembly, Backlight	N9020-60217
A2	25 MHz Analog IF Assembly	
	Standard	N9020-60290
	TAA Compliant	N9020-60290
A3	40 MHz Digital IF Assembly	
	New	N9020-60016
	Exchange	N9020-69016

Replaceable Parts

Table 17-1 All Replaceable Parts

Reference Designator	Description	Part Number
A3W1	Wire Harness, Smart Noise Source	N9020-60090
A4	Processor Assembly, without A5 Disk Drive or SD Card	
	Options PC6, PC6S	W1312-60214
	Option PC8	W1312-60524
	Option PCA	W1312-60561
A4A1	Disk Drive Interconnect Board	W1312-63079
	Options PC6, PC6S	W1312-63377
	Option PC8	W1312-63377
	Option PCA	W1312-63571
A4A2	Memory Card, SD, Options PC6, PC6S, PC8	1819-1354
A4BT1	Battery, CPU, 3V, LI Manganese Dioxide	1420-0356 (CR2032)
A5	Solid State Disk Drive	
	Options PC6, PC6S - Windows 7	N9020-60355
	Options PC6, PC6S - Windows 10	N9020-60381
	Option PC8 - Windows 10	N9032-60039
	Option PCA - Windows 10	N9032-60025
A5MP0	Disk Drive Tray Assembly, Options PC6, PC6S, PC8	E6607-61820
A5MP1	Disk Drive Tray, Options PC6, PC6S, PC8	W1312-40078
A5MP2	Disk Drive Rear Panel, Options PC6, PC6S, PC8	W1312-00103
A5MP3	Disk Drive Handle, Options PC6, PC6S, PC8	1440-0421
A6	Power Supply	
	Option EP1	0950-4934
	Option EP0, B2X, B5X	0950-5748
A7	Midplane	W1312-63310
A8	Motherboard	N9030-63002
A9	RF Attenuator A (0-4 dB), Options 503, 508, 513, 526	33360-60011
	RF Attenuator A (0-10 dB), Options 544, 550	33326-60019
A10	RF Attenuator B (0-66 dB), Options 503, 508, 513, 526	33321-60085

Replaceable Parts

Table 17-1 All Replaceable Parts

Reference Designator	Description	Part Number
	RF Attenuator B (0-60 dB), Options 544, 550	33325-60027
A11	Low Band Switch	
	Options 503, 508, 513, 526	E4410-60121
	Options 544, 550	N9020-60368
A12	YTF Preselector	
	Options 503, 508, 513, 526	5087-7382
	Options 544, 550	5087-7383
A12MP1	Gap Pad, for A12 Mounting	5022-7179
A13	Front End Assembly	
	Options 503, 508, 513, 526	N9020-60143
	Options 503, 508, 513, 526 with Option B2X	N9020-60129
	Options 503, 508, 513, 526 with Option B5X	N9020-60328
	Options 544, 550	N9020-60144
	Options 544, 550 with Option B2X	N9020-60210
	Options 544, 550 with Option B5X	N9020-60337
A13MP1	Bracket, Coax Switch Cover, Option B5X	N9030-00003
A14	Synthesizer Assembly	
	Option EP1	N9020-60008
	Option EP1 - TAA Compliant	N9020-60008G
	Option EP0	N9020-60377
A15	Front End Controller (FEC)	
	Option EP1	N9020-60172
	Option EP0	N9020-60295
A16	Reference Assy	
	Option EP1 - New	N9020-60188
	Option EP1 - Exchange	N9020-69188
	Option EP0 - New	N9020-60387
	Option EP0 - Exchange	N9020-69387
	Option EP0 - TAA Compliant	N9020-60387G

Replaceable Parts

Table 17-1 All Replaceable Parts

Reference Designator	Description	Part Number
A16A3	Reference OCXO, Option EP0	N9020-63194
A17	BBIQ LED Board, Option BBA	N9020-63095
A18	BBIQ Interface Board, Option BBA	N9020-60094
A19	BBIQ Main Board, Option BBA	N9020-60093
A20	YIG Tuned Oscillator (YTO)	N9020-60009
A25	Wideband Analog IF (WBAIF)	
	Option B85 or B1X	N9020-60044
	Option B2X or B5X	N9020-60038
A26	Wideband Digital IF (WBDIF)	
	Option B85, B1X, B2X, B5X - New	N9020-60311
	Option B85, B1X, B2X, B5X - Exchange	N9020-69311
A27	Wideband Digital IF (WBDIF)	
	Option B5X - New	N9020-60311
	Option B5X - Exchange	N9020-69311
A28	Wideband DIF Extension Board, Option RTS	N9020-60272
A28A1	Gasket, EMI, for WBDIF Extension, Option RTS	N9020-20178
A29	Audio Digitizer Assembly, Option 107	N9030-60047
AT1	Attenuator, 6 dB, Coax, Connects to SW2 and W13, Option MPB	08493-60026
B1, B2, B3	Fan	3160-4199
FL2	7.2 GHz Bandpass Filter, Option EP0	9135-6218
FL3	5.7 GHz Bandpass Filter on A13, Option B5X	9135-6217
J1	Input Connector Assembly	
	Type-N Input, Option CNF	N9039-60030
	3.5 mm Input, Option C35	N9020-60196
	2.4 mm Input, Option 544 or 550	N9030-60011
	EMI O-Ring, Input Connector	8160-1637
J2	EXT MIXER Connector	1250-1666
SW1	Switch, Coax, Preselector Bypass, Options 503, 508, 513, 526 with Option MPB	N1810-60143
SW2	Switch, Coax, Preselector Bypass, Options 503, 508, 513, 526 with Option MPB	N1810-60143

Replaceable Parts

Table 17-1 All Replaceable Parts

Reference Designator	Description	Part Number
SW3	Switch, Transfer, Low Noise Path	
	Options 503, 508, 513, 526 with Option LNP	87222-60026
	Options 544, 550 with Option LNP	87222-60029
SW4	Switch, Transfer, used for Microwave Preselector Bypass, Options 544, 550 with Options MPB	87222-60031
SW5	Switch, Coax, on Option B5X Front End Assembly	N1810-60144
SW6	Switch, Coax, on Option B5X Front End Assembly	N1810-60144

Chassis Parts		
	Chassis Base	N9020-00015
	Chassis Side, Left, Inner	W1312-00117
	Chassis Side, Left, Outer, Fans	W1312-00118
	Chassis Side, Right, Inner	W1312-00116
	Chassis Side, Right, Outer	N9020-00014
	Bracket, Midplane	W1312-00048
	Bracket, Chassis Front	W1312-00098
	Bracket, Power Supply	W1312-00131
	Rear Frame	N9020-00065
	Gusset, Chassis, Near RF Input Connector	W1312-00093
	Bracket, Attenuator, used for both Attenuators	
	Options 503, 508, 513, 526	E4449-00103
	Options 544, 550	N9020-00047
	Shield, Magnetic, Attenuator A, Options 544, 550	N9020-00043
	Shield, Magnetic, Attenuator B, Option 544, 550	N9020-00044
	Bracket, Low Band Switch Assembly	
	Options 503, 508, 513, 526	N9020-00023
	Options 544, 550	N9020-00013
	Bracket, WBDIF Extension Board, Option RTS	N9020-00067
	Bracket, SW1, Options 503, 508, 513, 526 with Option MPB	E4410-00104

Replaceable Parts

Table 17-1 All Replaceable Parts

Reference Designator	Description	Part Number
	Bracket, SW2, Options 503, 508, 513, 526 with Option MPB	E4410-00110
	Bracket, SW3, Options 503, 508, 513, 526 with Option MPB	N9020-00022
	Bracket, Bypass, Options 544, 550 with Options LNP or MPB	N9020-00021
	Shield, YTO, Top	N9020-00005
	Shield, YTO, Bottom	N9020-00006
	Top Brace Assembly, includes 4 each Vibration Mounts 0460-2725	N9030-60005
	Fan Guard, Steel	3160-0281
	Rivet, Fan Mounting	0361-1272

Cables		
W1	Cable, Ribbon 68 pin, Front Panel Interface to Motherboard	N9020-60216
W2	Cable, Semi-rigid, RF Input to Attenuator A	
	(Option CNF) Type-N Input	N9020-20100
	(Option C35) 3.5 mm Input	N9020-20139
	(Option 544, 550) 2.4 mm Input	N9020-20173
W3	Cable, Semi-rigid, Cal In to Attenuator, Reference Assy J701 to Attenuator A	
	Options 503, 508, 513, 526	N9020-20023
	Options 544, 550	N9020-20072
W4	Cable, Semi-rigid, Attenuator B to Attenuator A	
	Options 503, 508, 513, 526	N9020-20025
	Options 544, 550	N9020-20068
W5	Cable, Ribbon, Attenuator A/B to FEC J800	E4410-60157
W6	Cable, Semi-rigid, Attenuator B to Low Band Switch	
	Options 503, 508, 513, 526 without Option MPB or LNP	N9020-20024
	Options 544, 550 without Option MPB or LNP	N9010-20004
W7	Cable, ribbon, Low Band Switch J4 to FEC J700	N9020-60092
W8	Cable, Semi-rigid, Front End assy J2 to Low Band Switch J2	
	Options 503, 508, 513, 526	N9020-20101
	Options 544, 550	N9020-20131

Replaceable Parts

Table 17-1 All Replaceable Parts

Reference Designator	Description	Part Number
W10	Cable, Semi-rigid, Switch 2 port 2 to YTF, Options 503, 508, 513, 526 with Option LNP or MPB	E4410-20163
W11	Cable, Wire Harness, YTF Control, FEC J300 to YTF J1	N9020-60059
W12	Cable, Wire Harness, Preselector Bypass Switch Control, FEC J801	
	Option LNP / MPB, no B5X	E4410-60159
	Option B5X	N9030-60035
W13	Cable, Semi-rigid, Switch 1 port 1 to AT1 6 dB Pad, Options 503, 508, 513, 526 with Option LNP or MPB	N9020-20210
W14	Cable, Semi-rigid, YTF out to Switch 1 port 2, Options 503, 508, 513, 526 with Option LNP or MPB	E4410-20165
W15	Cable, Semi-rigid, Switch 1 Port C to Front End Assy RF Input. J9, Options 503, 508, 513, 526 with Option LNP or MPB	E4410-20164
W16	Cable, IF Out from Front End Assy J7 to FEC J902	8121-1862
W18	Cable, Semi-rigid, 2nd LO In, Reference Assy J702 to Front End Assy J1	N9020-20022
W19	Cable, Semi-rigid, AUX LO Out from Front End Assy J3 to Switched Filter Assy J6	N9020-20077
W20	Cable, Semi-rigid, Front End Assy J4 To YTO	
	Options 503, 508, 513, 526 - without EP0	N9020-20018
	Options 544, 550 - without EP0	N9020-20152
W21	Cable, Semi-rigid, LO Synthesizer Assy J20 to Front End Assy J5, Without EP0	N9020-20019
W22	Cable, ribbon, Front End Assy control J12 to FEC J102	E4410-60156
W23	Cable, ribbon, YTO Control, LO Synthesizer J25 to YTO	N9020-60024
W24	Cable Assembly, Ribbon Cable, BBIQ Interface Board J1 to BBIQ Main Board J1, Option BBA	8121-2090
W25	Cable, coax, Narrow Band IF Out, FEC J900 to Analog IF J100	8121-1865
W26	Cable, coax, Wideband IF Out, FEC J901 to Digital IF J15	
	Instruments without Option B1X, B2X, B5X	8121-1919
W27	Cable, Coax, Aux IF Out, FEC J1100 to Rear Panel Aux IF Out	8121-1859
W28	Cable, Ribbon, Switched Filter control, FEC J1300 to Switched Filter J1	N9020-60064
W29	Cable, Semi-rigid, Front Panel Ext Mixer Connector to W75, Option EXM	N9020-20166
W30	Cable, Coax, Ext IF Out, A13J13 to FEC J903	
	Option 503, 508, 513, 526 with Option EXM	8121-2027

Replaceable Parts

Table 17-1 All Replaceable Parts

Reference Designator	Description	Part Number
	Option 544, 550 with Option EXM	8121-2025
W31	Cable, Semi-rigid, 4.8GHz 2nd LO. Reference Assy, J703 to Synthesizer Assy J4, Without EP0	N9020-20021
W32	Cable, Coax, 100 MHz, Reference Assy J706 to LO Synthesizer J10	8121-1401
W33	Cable, Coax, 50 MHz Align, Front End Assy J6 to Reference Assy J705	8121-1940
W34	Cable, Coax, 2400 MHz, Reference Assy J718 to WBAIF J301, Option B85 or B1X	8121-0152
W35	Cable Assembly, Flexible Coax, BBIQ Main Board J101 to Reference Assy J707, Option BBA	8121-1401
W36	Cable, Coax, 300 MHz, Reference Assy J711 to Analog IF J300	8121-1861
W37	Cable, Coax, External Reference IN, rear panel to Reference Assy J704	8121-1860
W39	Cable, Coax, 100 MHz ref B, Reference Assy J716 to Digital IF J14	8121-1401
W40	Cable, Coax, 250 MHz from WBAIF J102 to Digital IF J15, Option B85 or B1X	8121-1401
W41	Cable, Coax, Wideband IF from FEC J901 to WBAIF J101, Option B85 or B1X	8121-1865
W42	Cable, Coax, 22.5 MHz IF Out, Analog IF J601 to Digital IF J19	8120-8868
W43	Cable, Ribbon Interconnect from Analog IF J820 to Digital IF J30	N9020-60046
W44	Cable, Ribbon, WBAIF J2 to WBDIF J504, Option B85 or B1X	8121-1854
W45	Cable, Coax, Step Cal, Digital IF J17 to WBAIF J805, Option B85 or B1X	8121-1401
W46	Cable, Coax, Step Cal, WBAIF J806 to Reference Assy J726, Option B85 or B1X	8121-0152
W47	Cable, Coax, Step Cal, A3 Digital IF J17 to Reference Assy J726, Required if no Option B85, B1X, B2X, B5X	8121-1401
W50	Cable, Coax, Audio Input, Option 107	N9020-60344
W51	Cable, Semi-rigid, Input Attenuator B to Switch 3 port 1	
	Options 503, 508, 513, 526 with Option LNP or MPB	N9020-20143
	Options 544, 550 with Option LNP or MPB	N9020-20171
W52	Cable, Semi-rigid, Switch 3 Port 4 to A11 Low Band Switch J1	
	Options 503, 508, 513, 526 with Option LNP or MPB	N9020-20146
	Options 544, 550 with Option LNP or MPB	N9020-20125
W53	Cable, Semi-rigid, Switch 3 port 2 to Switch 2 Port C, Options 503, 508, 513, 526 with Option LNP or MPB	N9020-20144
W54	Cable, Semi-rigid, Switch 3 port 3 to A11 Low Band Switch J3	

Replaceable Parts

Table 17-1 All Replaceable Parts

Reference Designator	Description	Part Number
	Options 503, 508, 513, 526 with Option LNP or MPB	N9020-20145
	Options 544, 550 with Option LNP or MPB	N9020-20127
W55	Cable, Ribbon, Low Band Switch Bypass Control Switch 3 to FEC J802	
	Options 503, 508, 513, 526 with Option LNP or MPB	N9020-60087
	Options 544, 550 with Option LNP or MPB	N9020-60177
W56	Cable, Semi-rigid, Low band Switch Assy J3 to YTF Input	
	Options 503, 508, 513, 526 without Option MPB or LNP	N9020-20123
	Options 544, 550 without Option MPB or LNP	N9010-20005
W57	Cable, Semi-rigid, YTF Output to Front End Assy J9	
	Options 503, 508, 513, 526 without Option MPB or LNP	N9020-20124
	Options 544, 550 without Option MPB or LNP	N9010-20006
W59	Cable, Semi-rigid, Switch 3 Port 2 to Switch 4 Port 1, Options 544, 550 with Option LNP or MPB	N9020-20151
W60	Cable, Semi-rigid, Switch 4 Port 4 to YTF Input, Options 544, 550 with Option LNP or MPB	N9020-20128
W61	Cable, Semi-rigid, YTF Output to Switch 4 Port 3, Options 544, 550 with Option LNP or MPB	N9020-20129
W62	Cable, Semi-rigid, Switch 4 Port 2 to A13A1 Input J9, Options 544, 550 with Option LNP or MPB	N9020-20130
W63	Cable, Ribbon, WBDIF J9000 to WBDIF Extension Board J1, Option RTS	N9020-60278
W64	Cable, Ribbon, WBDIF J9000 to WBDIF Extension Board J2, Options RTS and B5X	N9020-60278
W65	Cable, Flex Circuit, WBAIF to WBDIF, Option B2X	N9030-60033
W66	Cable, Flex Circuit, WBAIF to A26 WBDIF and A27 WBDIF, Option B5X	N9030-60034
W68	Cable, Coax, Reference Assy J726 to WBAIF J1, Option B2X or B5X	8121-0152
W69	Cable, Coax, Reference Assy J718 to WBAIF J4, Option B2X or B5X	8121-0152
W70	Cable, Coax, WBAIF J17 to FEC J901, FEC, Option B2X or B5X	8121-1865
W71	Cable, Coax, WBAIF J18 to Digital IF J15, Option B2X or B5X	8121-1401
W72	Cable, Coax, WBAIF J2 to Digital IF J17, Option B2X or B5X	8121-1401
W73	Cable, Semi-rigid, Synthesizer Assy J1 to Front End Assy J4, Option EP0	N9020-20301

Replaceable Parts

Table 17-1 All Replaceable Parts

Reference Designator	Description	Part Number
W74	Cable, Semi-rigid, Front End Assy J9 to Lower Coax Switch Port C, Option B2X, B5X	N9020-20305
W75	Cable, Semi-rigid, Front End Assy J8 to W29	
	Option EXM, 508, 513, 526	N9020-20304
	Option EXM, 544, 550	N9020-20167
W76	Cable, Semi-rigid, Front End Assy IF Out to SW5 Port C, Option B5X, 508, 513, 526, 544, 550	N9020-20266
W77	Cable, Semi-rigid, SW5 Port 1 to BP Filter In, Option B5X	N9020-20268
W78	Cable, Semi-rigid, SW5 Port 2 to Switched Filter In, Option B5X	N9020-20267
W79	Cable, Semi-rigid, Switched Filter Out to SW6 Port 2, Option B5X	N9020-20292
W80	Cable, Semi-rigid, BP Filter Out to SW6 Port 1, Option B5X	N9020-20293
W81	Cable, Semi-rigid, DDS Synthesizer Assy J3500 2 to FL2 7.2 GHz BPF, Option EP0	N9020-20226
W82	Cable, Semi-rigid, Reference Assy J703 to FL2 7.2 GHz BPF, Option EP0	N9020-20303
W83	Cable, Semi-rigid, DDS Synthesizer Assy J2 to YTO Output	
	Options 503, 508, 513, 526 with Option EP0	N9020-20302
	Options 544, 550 with Option EP0	N9020-20298
W84	Cable, Semi-rigid, SW6 port C to Front End Assy IF IN J11	
	Options B5X, 508, 513, 526	N9020-20265
	Options B5X, 544, 550	N9020-20276

Labels		
	Warning Label, External Mixing, Option EXM	N9030-80018
	Blank Label, Rear Panel Holes Cover, Wideband Digital Bus Port, Without Option RTS	N9030-80045

Miscellaneous		
	50 Ohm Load, SMA, for A13A1J8	1810-0118
	Cable Clamp, for Coax Cables (Attaches to Right Rear Chassis Side)	5023-1379
	Cable Clamp, Nylon, 0.375 Wide	1400-1439
	Cable Clamp, Ribbon (Attaches to Right Front Chassis Side)	5023-1397
	Cable Tie, 0.062 - 2 dia, .045 Wide	1400-0507

Replaceable Parts

Table 17-1 All Replaceable Parts

Reference Designator	Description	Part Number
	Cable Tie, 0.062 - 0.625 dia 0.091 Wide	1400-0249
	Card Guide, for Chassis Left and Right	W1312-40001
	Edge Protector, for Chassis Left and Right	0400-0018
	Fastener, Hook and Loop	0510-1303
	Spiral Wrap; 0.250 IN OD; 0.160 IN ID, for Digital IF Cables	0890-0025
	Spring Clip, Secures Flex Cable to WB-DIF Assy, Options B2X, B5X	N9030-00002
	Vibration Mounts	0460-2725
Button Up		
	Dress Cover	N9020-00069
	Rear Feet (4 Required)	5041-7903
	Bottom Feet (4 Required)	5041-7906
	Bottom Feet Key Locks (4 Required)	5021-2840
	Strap Handle (4 Required)	N9020-60253
	End Cap, for Strap Handle	5041-7902
	Hole Plug, Dome Head, Nylon, for 0.875 Hole	6960-0177
	Hole Plug, Nylon1810-0118, for 0.25 hole (SMA Size)	6960-0076
	Hole Plug, Nylon, for 0.5 D Hole (BNC Size)	6960-0149
	Front Panel Impact Cover, Plastic	N9020-40004
	Touch-up Paint, Phantom-Gray, 1-Oz Bottle	6010-3330

a. Included, but not required for use on N9030B.
b. Original part discontinued. N9020-60268 is the Front Panel Interface and Display Replacement Kit to replace both A1A2 Front Panel Controller and A1A3 Touch Screen Display assemblies to ensure compatibility. Verify the instrument has not already had the kit installed; the previous part numbers for these assemblies are N9020-63294 and 2090-1103, respectively.

Table 17-2 Attaching Hardware

Attach	To	Qty	Part Number	Type	Tool	Torque
Analog IF	Digital IF	3	0515-0372	M3 X 0.5 (8 mm long)	Torx T-10	9 inch-lbs
Attenuators	Attenuator Bracket	2 per	0515-0372	M3 X 0.5 (8 mm long)	Torx T-10	9 inch-lbs
Attenuator Bracket	Chassis	2 per	0515-0372	M3 X 0.5 (8 mm long)	Torx T-10	9 inch-lbs
Backlight Inverter Board	Inverter Bracket	2	0515-0372	M3 X 0.5 (8 mm long)	Torx T-10	9 inch-lbs
Backlight Inverter Top Shield	Backlight Inverter Bottom Shield	8	0515-0372	M3 X 0.5 (8 mm long)	Torx T-10	9 inch-lbs
Chassis Bottom	Chassis Front & Side Brackets	15	0515-0372	M3 X 0.5 (8 mm long)	Torx T-10	9 inch-lbs
Chassis Front Bracket	Chassis	10	0515-0372	M3 X 0.5 (8 mm long)	Torx T-10	9 inch-lbs
Chassis Gusset	Chassis	3	0515-0372	M3 X 0.5 (8 mm long)	Torx T-10	9 inch-lbs
Chassis Side (Right Outside)	Chassis	8	0515-0372	M3 X 0.5 (8 mm long)	Torx T-10	9 inch-lbs
CPU Assembly	Chassis	6	0515-0372	M3 X 0.5 (8 mm long)	Torx T-10	9 inch-lbs
CPU Top Shield	CPU Assembly	3	0515-0372	M3 X 0.5 (8 mm long)	Torx T-10	9 inch-lbs
		19	0515-1227	M3 X 0.5 (6 mm long)	Torx T-10	9 inch-lbs
Display	Display Bracket	4	0515-0365	M2 X 0.4 (4 mm long)	Torx T-6	2 inch-lbs

Table 17-2 Attaching Hardware

Attach	To	Qty	Part Number	Type	Tool	Torque
Display Bracket	Front Frame	2	0515-0372	M3 X 0.5 (8 mm long)	Torx T-10	9 inch-lbs
Disk Drive	Disk Drive Tray	4	0515-0372	M3 X 0.5 (8 mm long)	Torx T-10	9 inch-lbs
Disk Drive Handle	Disk Drive Rear Panel	2	0515-1227	M3 X 0.5 (6 mm long)	Torx T-10	9 inch-lbs
Disk Drive Interconnect	CPU Assembly	2	0515-0372	M3 X 0.5 (8 mm long)	Torx T-10	9 inch-lbs
Disk Drive Rear Panel	Disk Drive Tray	4	0515-2219	M2.5 X 0.45 (5 mm long)	Torx T-8	6 inch-lbs
External Reference BNC	Rear Panel	1	2190-0102	Lock Washer	n/a	n/a
		1	0590-2332	Hex Nut	9/16” Nut Driver	21 inch-lbs
Fan	Fan Bracket	4 per	0361-1272	Rivets	n/a	n/a
Fan Assembly	Chassis	7	0515-0372	M3 X 0.5 (8 mm long)	Torx T-10	9 inch-lbs
Front Frame Assembly	Chassis	8	0515-2032	M3 X 0.5 (8 mm long)	Torx T-10	9 inch-lbs
Front Panel Connector Cover Plate	Front Frame	2	0515-1227	M3 X 0.5 (6 mm long)	Torx T-10	9 inch-lbs
Front Panel Daughter Board	Front Frame	3	0515-0372	M3 X 0.5 (8 mm long)	Torx T-10	9 inch-lbs
Front Panel Interface Board	Front Frame	13	0515-1521	M3 X 0.5 (5 mm long)	Torx T-10	9 inch lbs.

Table 17-2 Attaching Hardware

Attach	To	Qty	Part Number	Type	Tool	Torque
Front Panel Shield	Front Frame	4	0515-0372	M3 X 0.5 (8 mm long)	Torx T-10	9 inch-lbs
LO Synthesizer Assembly	Chassis	2	0515-2032	M3 X 0.5 (8 mm long)	Torx T-10	9 inch-lbs
Low Band Switch Assy.	Low Band Switch Bracket	4	0515-0372	M3 X 0.5 (8 mm long)	Torx T-10	9 inch-lbs
Low Band Switch Bracket.	Chassis	2	0515-0372	M3 X 0.5 (8 mm long)	Torx T-10	9 inch-lbs
Midplane Assembly	Midplane Bracket	6	0515-0375	M3 X 0.5 (16 mm long)	Torx T-10	9 inch-lbs
Midplane Bracket	Chassis Sides	4	0515-0372	M3 X 0.5 (8 mm long)	Torx T-10	9 inch-lbs
	Motherboard	4	0515-0372	M3 X 0.5 (8 mm long)	Torx T-10	9 inch-lbs
Motherboard	Chassis Bottom	4	0515-0372	M3 X0.5 (8 mm long)	Torx T-10	9 inch-lbs
Power Supply Bracket	Chassis	8	0515-0372	M3 X 0.5 (8 mm long)	Torx T-10	9 inch-lbs
	Power Supply	3	0515-1946	M3 X 0.5 (8 mm long)	Torx T-10	9 inch-lbs
Preselector Bypass Switch (Option 508, 513, 526)	Preselector Bypass Switch Bracket	2 per	0515-1992	M2.5 X 0.45 (20 mm long)	Torx T-8	6 inch-lbs
Preselector Bypass Switch (Option 544, 550)	Preselector Bypass Switch Bracket	3	0515-1934	M2.5 X 0.45 (6 mm long)	Torx T-8	6 inch-lbs
Preselector Bypass Switch Bracket	Low Band Switch Bracket	1	0515-0372	M3 X 0.5 (8 mm long)	Torx T-10	9 inch-lbs

Table 17-2 Attaching Hardware

Attach	To	Qty	Part Number	Type	Tool	Torque
Rear Feet	Rear Panel	4	0515-1619	M4 X 0.7 (25 mm long)	Torx T-20	21 inch-lbs
		4	3050-0893	Flat Washer	n/a	n/a
Rear Frame	Chassis	5	0515-0372	M3 X 0.5 (8 mm long)	Torx T-10	9 inch-lbs
Rear Frame Hole Cover	Rear Frame Inner Hole Cover	16	0515-0372	M3 X 0.5 (8 mm long)	Torx T-10	9 inch-lbs
Reference Assy	Chassis	2	0515-0372	M3 X 0.5 (8 mm long)	Torx T-10	9 inch-lbs
RF Front End Assembly	Chassis	6	0515-0372	M3 X 0.5 (8 mm long)	Torx T-10	9 inch-lbs
RF Input Connector	Chassis	2	0515-0372	M3 X 0.5 (8 mm long)	Torx T-10	9 inch-lbs
Strap Handles	Chassis Side	2 per	0515-0710	M4 X 0.8 (18 mm long)	Torx T-20	21 inch-lbs
Top Brace	Chassis	12	0515-0372	M3 X 0.5 (8 mm long)	Torx T-10	9 inch-lbs
	Chassis & PCB Assemblies	12	0515-1946	M3 X 0.5 (6 mm long)	Torx T-10	9 inch-lbs
Transfer Switch	Transfer Switch Bracket	3	0515-1934	M2.5 X 0.45 (6 mm long)	Torx T-8	6 inch-lbs
Transfer Switch Bracket	Chassis	2	0515-2032	M3 X 0.5 (8 mm long)	Torx T-10	9 inch-lbs
	Low Band Switch Bracket	1	0515-0372	M3 X 0.5 (8 mm long)	Torx T-10	9 inch-lbs

Table 17-2 Attaching Hardware

Attach	To	Qty	Part Number	Type	Tool	Torque
YIG Tuned Filter Assembly	Chassis	4	0515-0372	M3 X 0.5 (8 mm long)	Torx T-10	9 inch-lbs
YIG Tuned Oscillator Assembly	Chassis	2	0515-0372	M3 X 0.5 (8 mm long)	Torx T-10	9 inch-lbs
YIG Tuned Oscillator Top Shield	YIG Tuned Oscillator	2	0515-0372	M3 X 0.5 (8 mm long)	Torx T-10	9 inch-lbs

Hardware

Figure 17-1 Major Assemblies

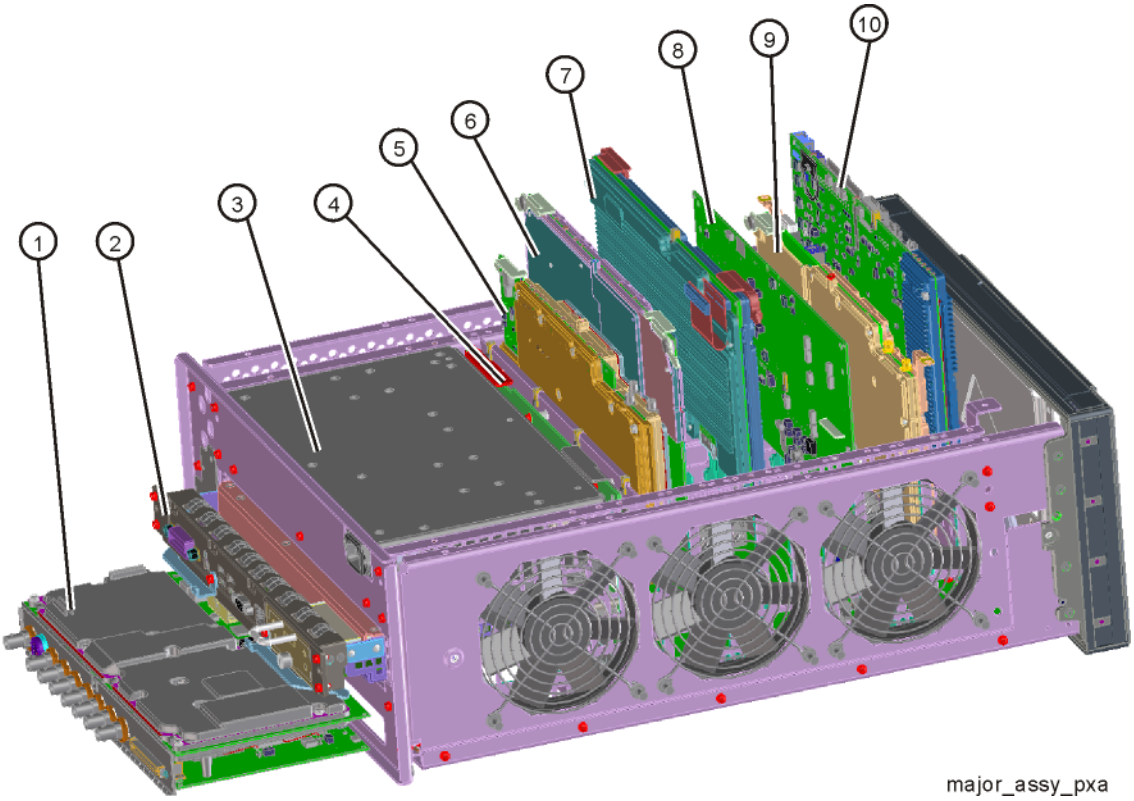

Table 17-3 Major Assemblies

Item	Description
1	A2 25 MHz Analog IF Assembly A3 40 MHz Digital IF Assembly
2	A4 Processor Assembly, without A5 Disk Drive or SD Card
3	A6 Power Supply
4	A7 Midplane
5	A16 Reference Assy
6	A25 Wideband Analog IF (WBAIF)
7	A26 Wideband Digital IF (WBDIF)
8	A19 BBIQ Main Board, Option BBA
9	A14 Synthesizer Assembly
10	A15 Front End Controller (FEC)

Figure 17-2 External Hardware

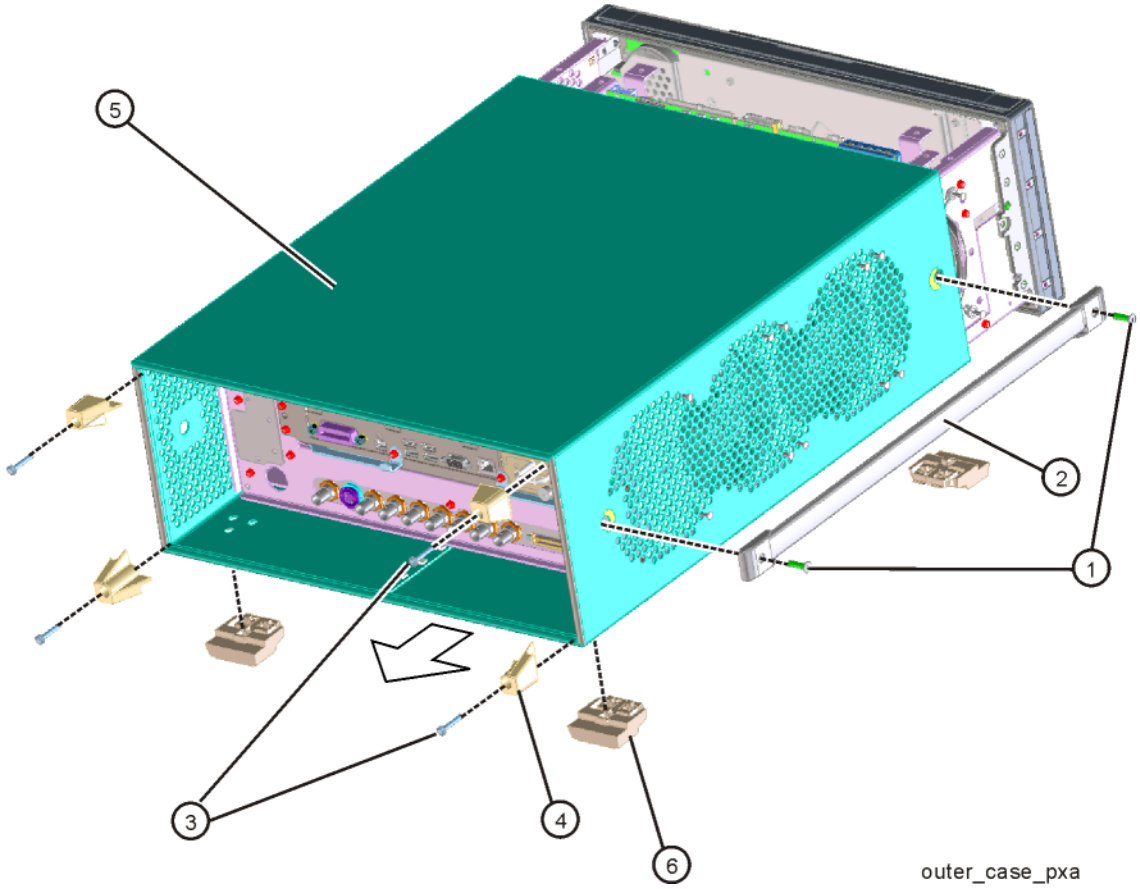

Table 17-4 External Hardware

Item	Description	Keysight Part Number
1, 2	Strap Handle (4 Required) (includes screws)	N9020-60253
3	Screw M4 X 0.7 (25 mm long) Flat Washer	0515-1619 3050-0893
4	Rear Feet (4 Required)	5041-7903
5	Dress Cover	N9020-00069
6	Bottom Feet (4 Required)	5041-7906

Figure 17-3 CPU Assembly (Option PCA)

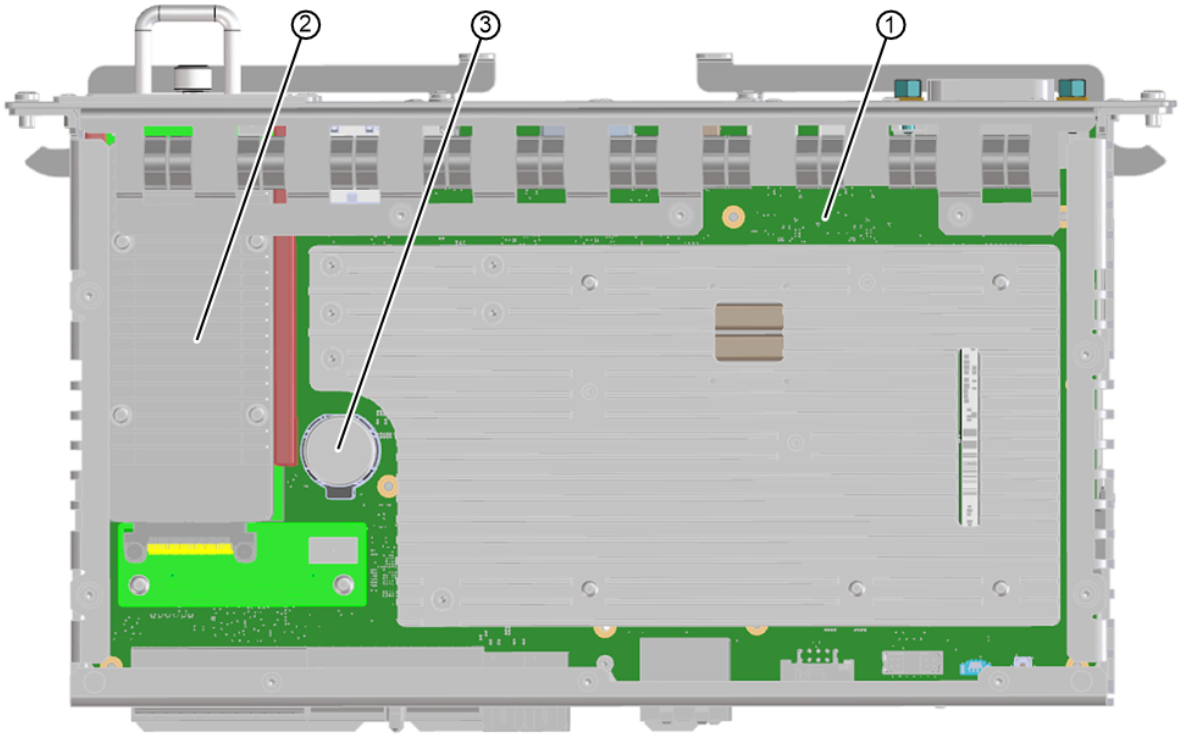

Table 17-5 CPU Assembly (Option PCA)

Item	Description	Keysight Part Number
1	A4 Processor Assembly, without A5 Disk Drive or SD Card	W1312-60561
2	A5 Solid State Disk Drive	N9032-60025
3	A4BT1 Battery, CPU, 3V, LI Manganese Dioxide	1420-0356 (CR2032)

Figure 17-4 CPU Assembly (Option PC6, PC6S, and PC8)

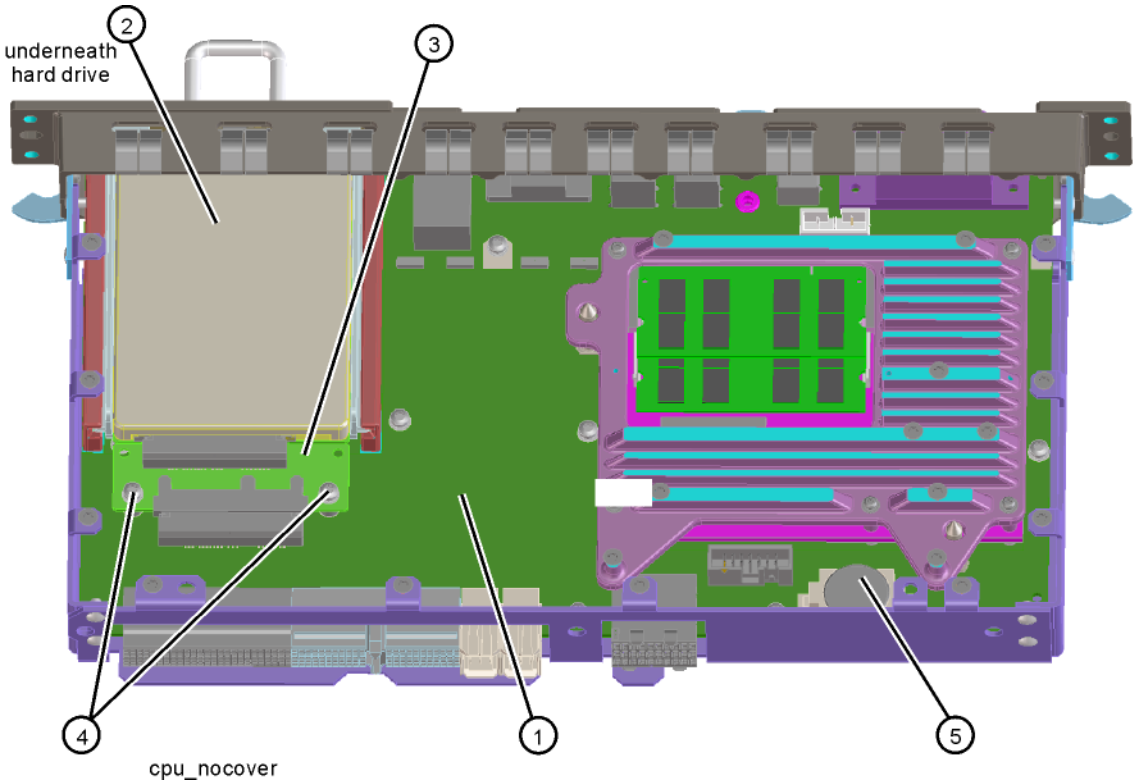

Table 17-6 CPU Assembly (Option PC6, PC6S, and PC8)

Item	Description	Keysight Part Number
1	A4 Processor Assembly, without A5 Disk Drive or SD Card	
	Options PC6, PC6S	W1312-60214
	Option PC8	W1312-60524
2	A4A2 Memory Card, SD , Options PC6, PC6S, PC8	1819-1354
3	A4A1 Disk Drive Interconnect Board	W1312-63377
4	Screw M3 x 0.5 (8 mm long)	0515-0372
5	A4BT1 Battery, CPU, 3V, LI Manganese Dioxide	1420-0356 (CR2032)

Figure 17-5 Disk Drive Tray Assembly (Option PC6, PC6S, and PC8)

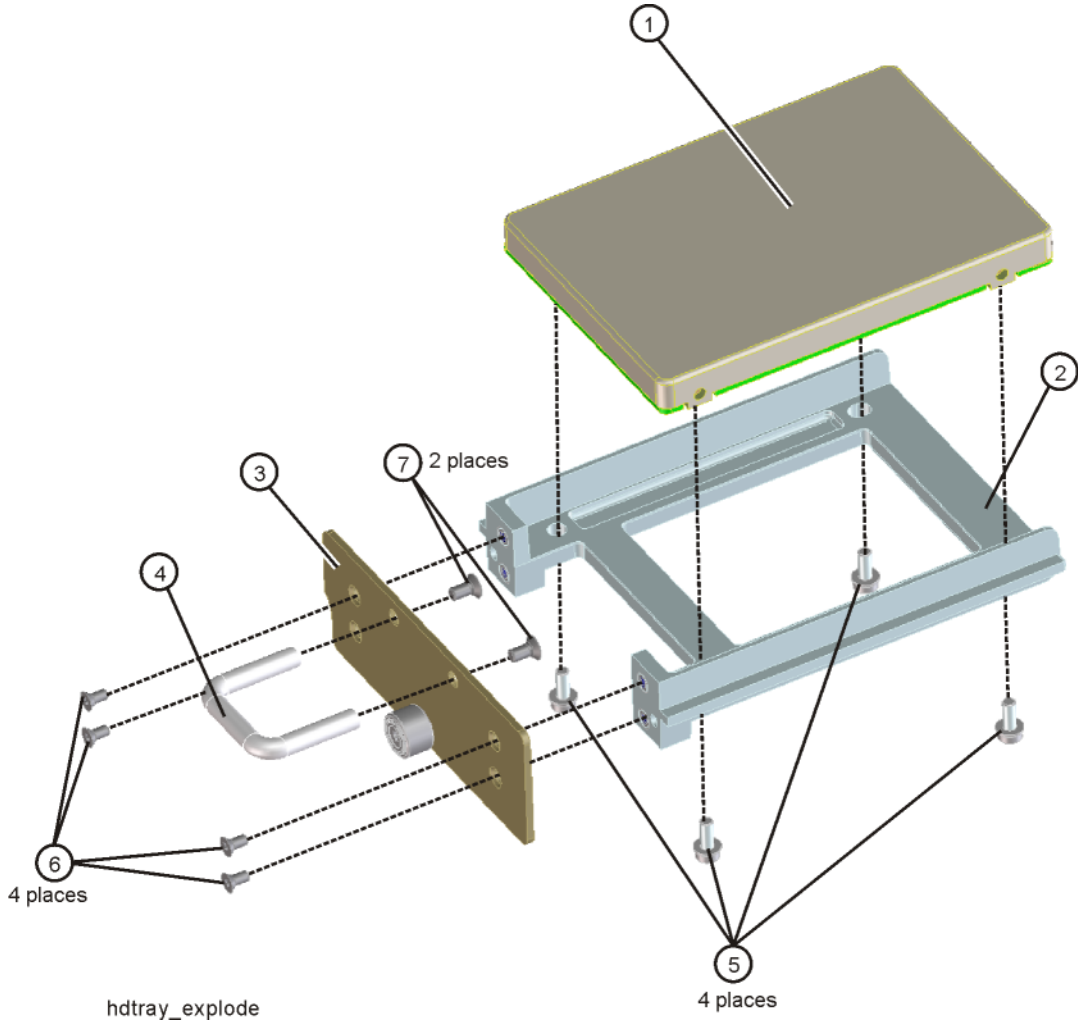

Table 17-7 Disk Drive Tray Assembly

Item	Description	Keysight Part Number
1	A5 Solid State Drive - Windows 7	N9020-60355 (PC6, PC6S)
	A5 Solid State Drive - Windows 10	N9020-60381 (PC6, PC6S) N9032-60039 (PC8)
2	A5MP1 Disk Drive Tray	W1312-40078
3	A5MP2 Disk Drive Rear Panel	W1312-00103
4	A5MP3 Disk Drive Assembly Handle	1440-0421
5	Screw M3 x 0.5 (8 mm long)	0515-1035 Flat head
6	Screw M2.5 x 0.45 (5 mm long)	0515-2219
7	Screw M3 x 0.5 (6 mm long)	0515-1227

Figure 17-6 Top Brace and Reference Bracket

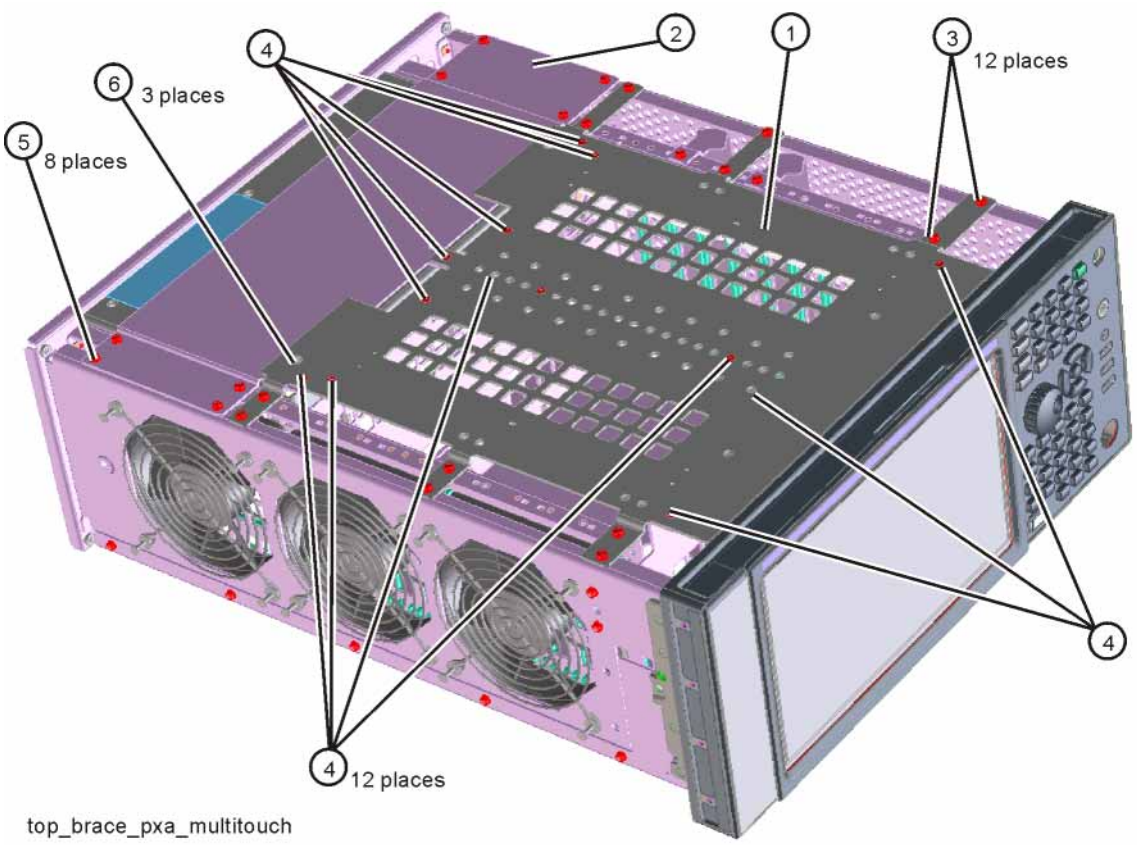

Table 17-8 Top Brace and Reference Bracket

Item	Description	Keysight Part Number
1	Top Brace Assembly, includes 4 each Vibration Mounts 0460-2725	N9030-60005
2	Bracket, Power Supply	W1312-00131
3	Screw M3 X 0.5 (8 mm long)	0515-0372
4	Screw M3 X 0.5 (6 mm long)	0515-1946
5	Screw M3 X 0.5 (8 mm long)	0515-0372
4	Screw M3 X 0.5 (8 mm long)	0515-1946

Figure 17-7 RF Area (Options 503, 508, 513, 526)

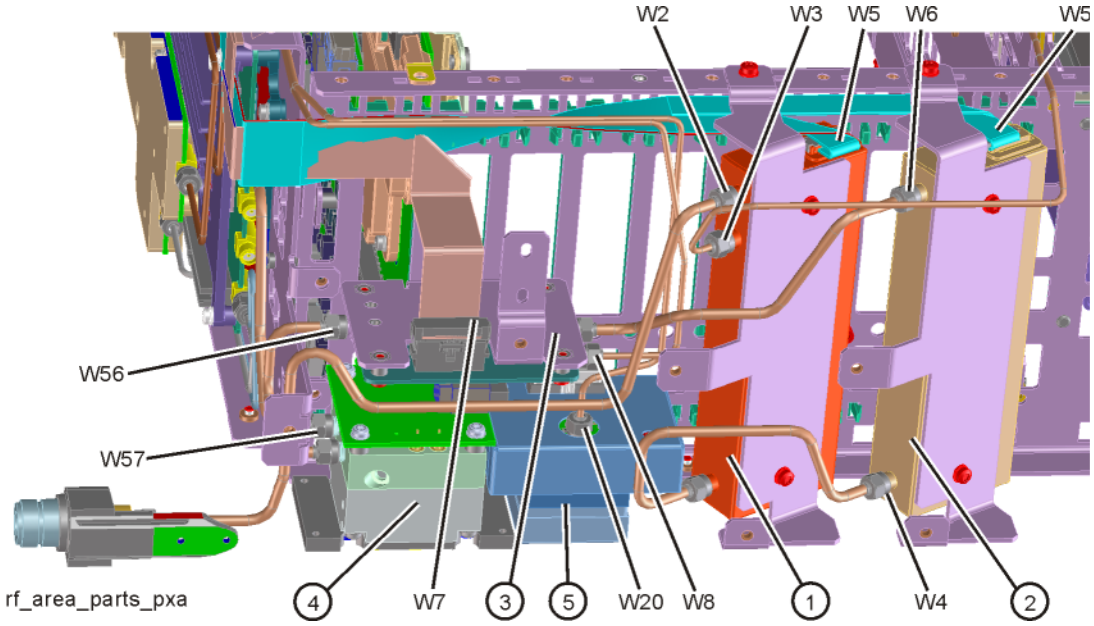

Figure 17-8 RF Area (Options 503, 508, 513, 526) with Options LNP and MPB Switches

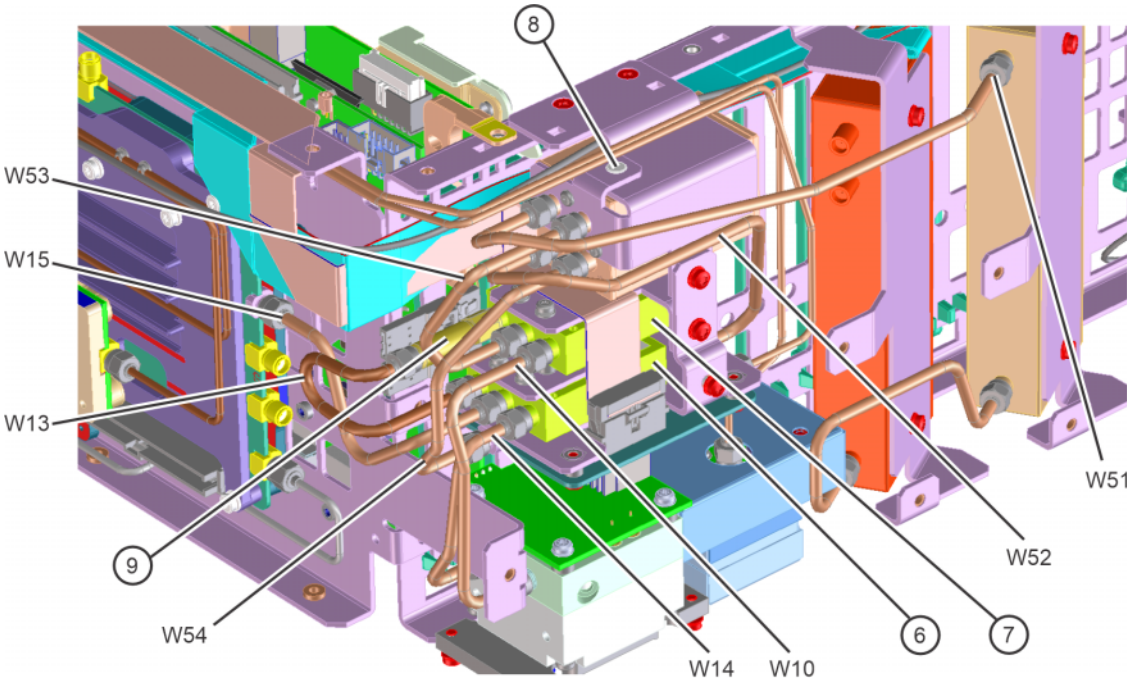

Table 17-9 RF Area (Options 503, 508, 513, 526)

Item	Description	Keysight Part Number
1	A9 RF Attenuator A (0-4 dB), Options 503, 508, 513, 526	33360-60011
2	A10 RF Attenuator B (0-66 dB) , Options 503, 508, 513, 526	33321-60085
3	A11 Low Band Switch	E4410-60121
4	A12 YTF Preselector	5087-7382
5	A20 YIG Tuned Oscillator (YTO)	N9020-60009
W2	Cable, Semi-rigid, RF Input to Attenuator A	N9020-20100
W3	Cable, Semi-rigid, Cal In to Attenuator, Reference Assy J701 to Attenuator A	N9020-20023
W4	Cable, Semi-rigid, Attenuator B to Attenuator A	N9020-20025
W5	Cable, Ribbon, Attenuator A/B to FEC J800	E4410-60157
W6	Cable, Semi-rigid, Attenuator B to Low Band Switch	N9020-20024
W7	Cable, ribbon, Low Band Switch J4 to FEC J700	N9020-60092
W8	Cable, Semi-rigid, Front End assy J2 to Low Band Switch J2	N9020-20101
W20	Cable, Semi-rigid, Front End Assy J4 To YTO	N9020-20018
W56	Cable, Semi-rigid, Low band Switch Assy J3 to YTF Input	N9020-20123
W57	Cable, Semi-rigid, YTF Output to Front End Assy J9	N9020-20124

Table 17-10 RF Area (Options 503, 508, 513, 526) with Options LNP and MPB Switches

Item	Description	Keysight Part Number
6	SW1 Switch, Coax, Preselector Bypass, Options 503, 508, 513, 526 with Option MPB	N1810-60143
7	SW2 Switch, Coax, Preselector Bypass, Options 503, 508, 513, 526 with Option MPB	N1810-60143
8	SW3 Switch, Transfer, Low Noise Path	87222-60026
9	AT1 Attenuator, 6 dB, Coax, Connects to SW2 and W13, Option MPB	08493-60026
W10	Cable, Semi-rigid, Switch 2 port 2 to YTF, Options 503, 508, 513, 526 with Option LNP or MPB	E4410-20163
W13	Cable, Semi-rigid, Switch 1 port 1 to AT1 6 dB Pad, Options 503, 508, 513, 526 with Option LNP or MPB	N9020-20210
W14	Cable, Semi-rigid, YTF out to Switch 1 port 2, Options 503, 508, 513, 526 with Option LNP or MPB	E4410-20165
W15	Cable, Semi-rigid, Switch 1 Port C to Front End Assy RF Input. J9, Options 503, 508, 513, 526 with Option LNP or MPB	E4410-20164

Table 17-10 RF Area (Options 503, 508, 513, 526) with Options LNP and MPB Switches

Item	Description	Keysight Part Number
W51	Cable, Semi-rigid, Input Attenuator B to Switch 3 port 1	N9020-20143
W52	Cable, Semi-rigid, Switch 3 Port 4 to A11 Low Band Switch J1	N9020-20146
W53	Cable, Semi-rigid, Switch 3 port 2 to Switch 2 Port C, Options 503, 508, 513, 526 with Option LNP or MPB	N9020-20144
W54	Cable, Semi-rigid, Switch 3 port 3 to A11 Low Band Switch J3	N9020-20127

Figure 17-9 RF Area (Options 544, 550)

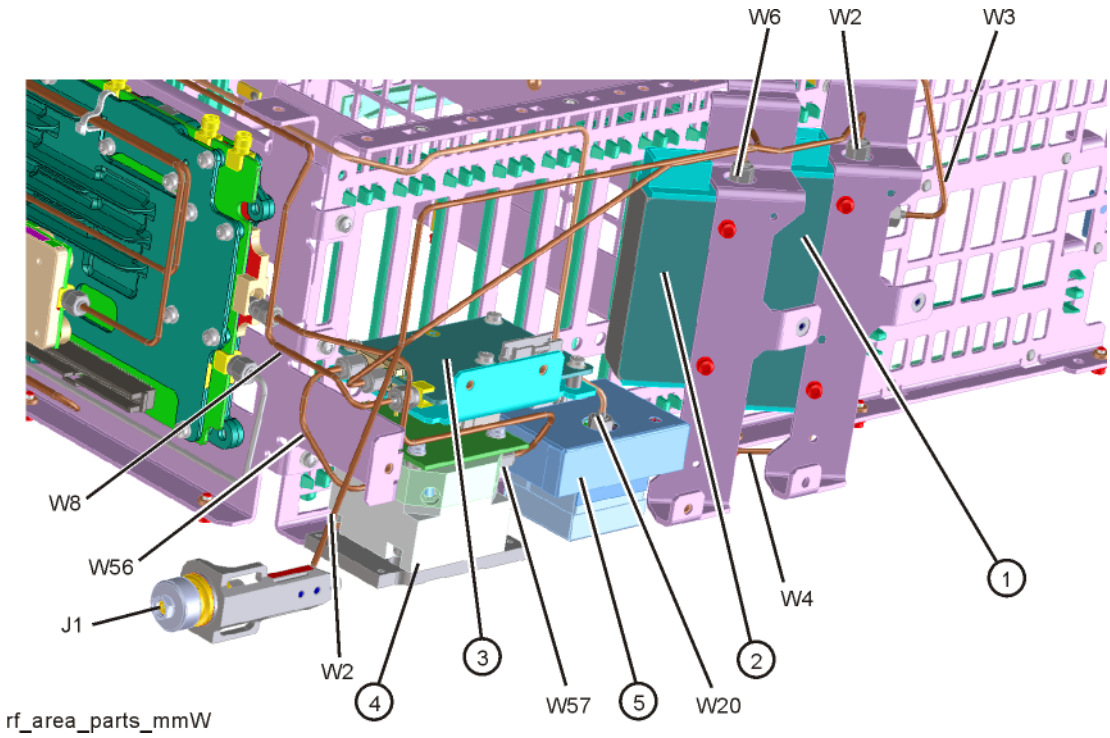

Table 17-11 RF Area (Options 544, 550)

Item	Description	Keysight Part Number
1	A9 RF Attenuator A (0-10 dB), Options 544, 550	33326-60019
2	A10 RF Attenuator B (0-60 dB), Options 544, 550	33325-60027
3	A11 Options 544, 550	N9020-60368
4	A12 Options 544, 550	5087-7383
5	A20 YIG Tuned Oscillator (YTO)	N9020-60009
J1	3.5 mm Input, Option C35	N9020-60196
W2	(Option C35) 3.5 mm Input	N9020-20139
W3	Options 544, 550	N9020-20072
W4	Options 544, 550	N9020-20068
W6	Options 544, 550 without Option MPB or LNP	N9010-20004
W8	Options 544, 550	N9020-20131
W20	Cable, Semi-rigid, Front End Assy J4 To YTO	N9020-20152
W56	Options 544, 550 without Option MPB or LNP	N9010-20005
W57	Options 544, 550 without Option MPB or LNP	N9010-20006

Figure 17-10 Front End Parts (Options 503, 508, 513, 526, EP1)

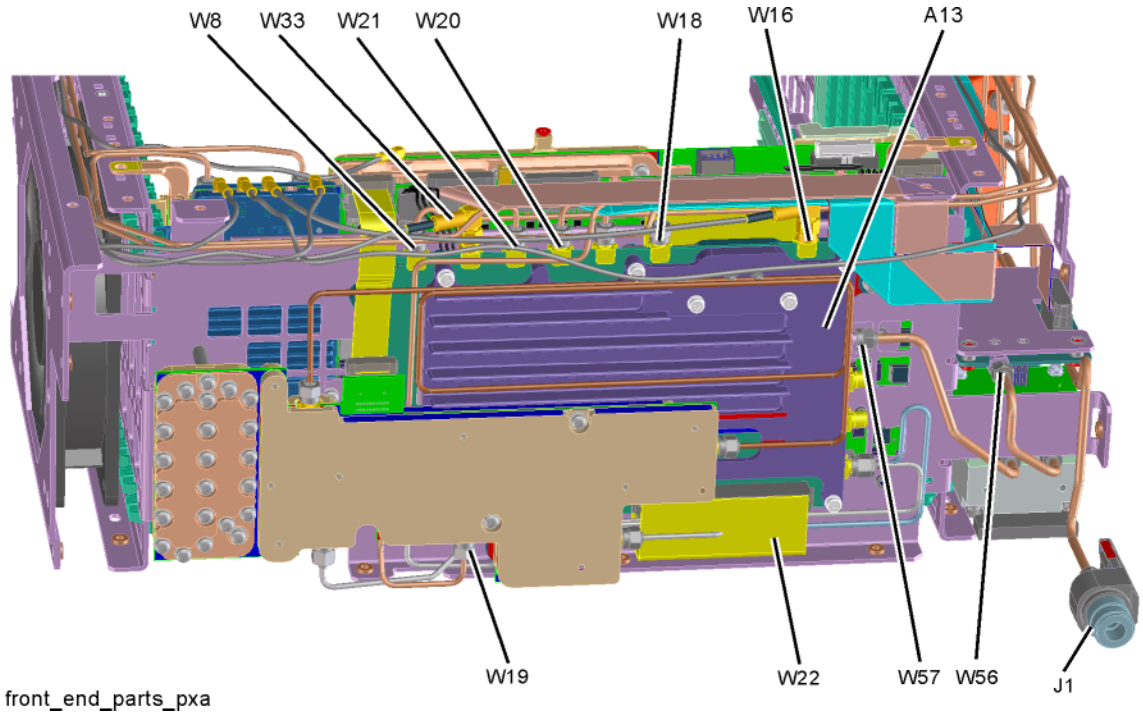

Table 17-12 Front End Parts (Options 503, 508, 513, 526, EP1)

Item	Description	Keysight Part Number
A13	A13 Front End Assembly	N9020-60143
J1	Input Connector Assembly	
W8	Cable, Semi-rigid, Front End assy J2 to Low Band Switch J2	N9020-20101
W16	Cable, IF Out from Front End Assy J7 to FEC J902	8121-1862
W18	Cable, Semi-rigid, 2nd LO In, Reference Assy J702 to Front End Assy J1	N9020-20022
W20	Cable, Semi-rigid, Front End Assy J4 To YTO	N9020-20018
W21	Cable, Semi-rigid, LO Synthesizer Assy J20 to Front End Assy J5, Without EP0	N9020-20019
W22	Cable, ribbon, Front End Assy control J12 to FEC J102	E4410-60156
W33	Cable, Coax, 50 MHz Align, Front End Assy J6 to Reference Assy J705	8121-1940

Figure 17-11 Front End Parts (Options 544, 550, EP1)

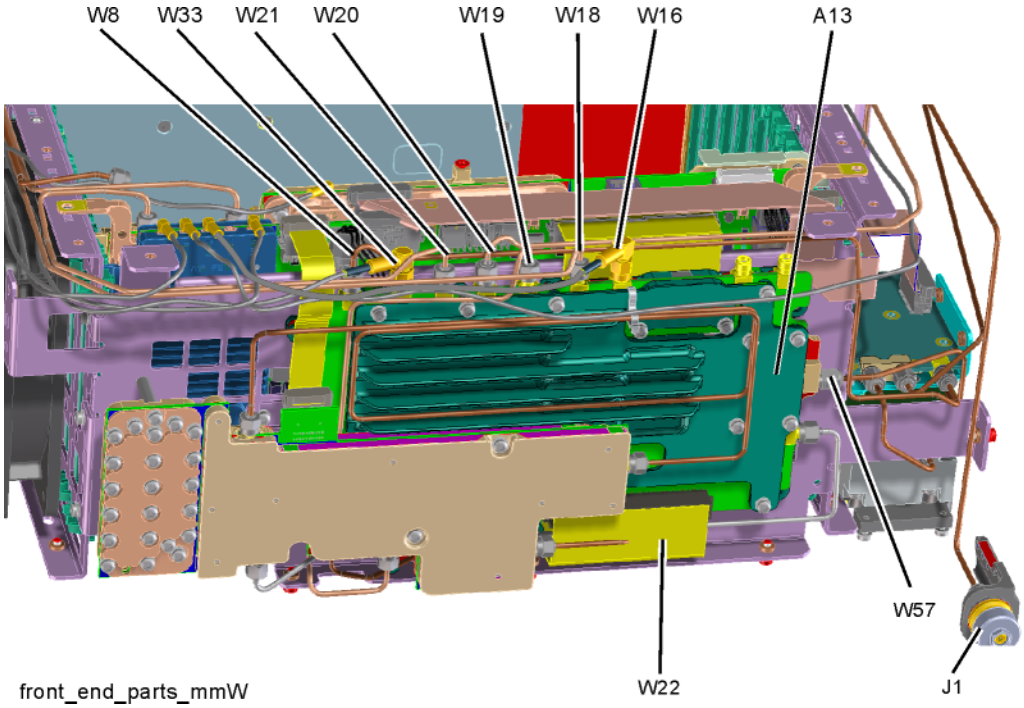

Table 17-13 Front End Parts (Options 544, 550, EP1)

Item	Description	Keysight Part Number
A13	A13 Options 544, 550	N9020-60144
J1	3.5 mm Input, Option C35	N9020-60196
W8	Options 544, 550	N9020-20131
W16	Cable, IF Out from Front End Assy J7 to FEC J902	8121-1862
W18	Cable, Semi-rigid, 2nd LO In, Reference Assy J702 to Front End Assy J1	N9020-20022
W19	Cable, Semi-rigid, AUX LO Out from Front End Assy J3 to Switched Filter Assy J6	N9020-20077
W20	Cable, Semi-rigid, Front End Assy J4 To YTO	N9020-20152
W21	Cable, Semi-rigid, LO Synthesizer Assy J20 to Front End Assy J5, Without EP0	N9020-20019
W22	Cable, ribbon, Front End Assy control J12 to FEC J102	E4410-60156
W33	Cable, Coax, 50 MHz Align, Front End Assy J6 to Reference Assy J705	8121-1940
W57	Options 544, 550 without Option MPB or LNP; see W62 if Option LNP/MPB	N9010-20006

Figure 17-12 Front End Parts (Options 503, 508, 513, 526, EP0, B2X)

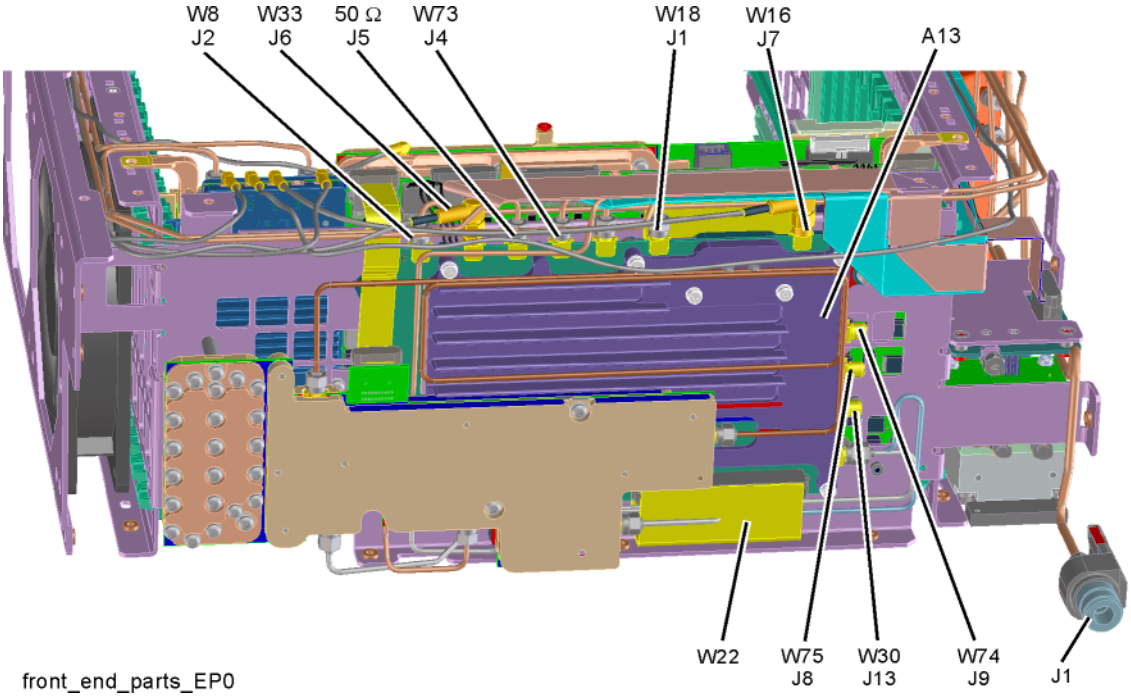

Table 17-14 Front End Parts (Options 503, 508, 513, 526, EP0, B2X)

Item	Description	Keysight Part Number
A13	A13 Front End Assembly	N9020-60129
J1	Input Connector Assembly	
W8	Cable, Semi-rigid, Front End assy J2 to Low Band Switch J2	N9020-20101
W16	Cable, IF Out from Front End Assy J7 to FEC J902	8121-1862
W18	Cable, Semi-rigid, 2nd LO In, Reference Assy J702 to Front End Assy J1	N9020-20022
W22	Cable, ribbon, Front End Assy control J12 to FEC J102	E4410-60156
W30	Cable, Coax, Ext IF Out, A13J13 to FEC J903	8121-2027
W33	Cable, Coax, 50 MHz Align, Front End Assy J6 to Reference Assy J705	8121-1940
W73	Cable, Semi-rigid, Synthesizer Assy J1 to Front End Assy J4, Option EP0	N9020-20301
W74	Cable, Semi-rigid, Front End Assy J9 to Lower Coax Switch Port C, Option B2X, B5X	N9020-20305
W75	Cable, Semi-rigid, Front End Assy J8 to W29	N9020-20304

Figure 17-13 Front End Parts (Options 544, 550, EP0, B2X)

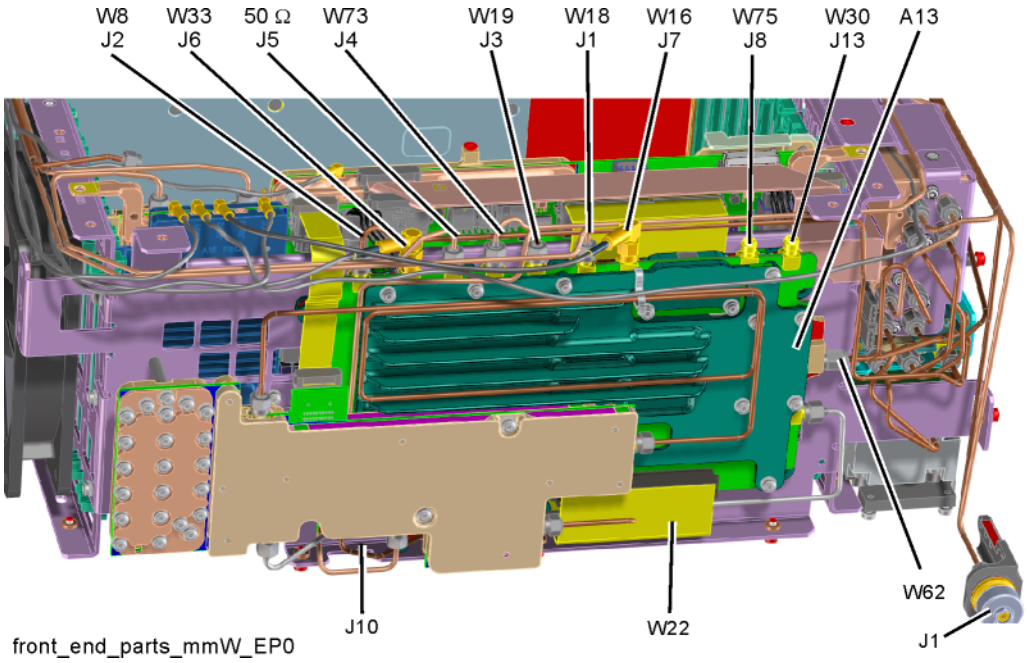

Table 17-15 Front End Parts (Options 544, 550, EP0, B2X)

Item	Description	Keysight Part Number
A13	A13 Options 544, 550 with Option B2X	N9020-60210
J1	3.5 mm Input, Option C35	N9020-60196
W8	Options 544, 550	N9020-20131
W16	Cable, IF Out from Front End Assy J7 to FEC J902	8121-1862
W18	Cable, Semi-rigid, 2nd LO In, Reference Assy J702 to Front End Assy J1	N9020-20022
W22	Cable, ribbon, Front End Assy control J12 to FEC J102	E4410-60156
W30	Option 544, 550 with Option EXM	8121-2025
W33	Cable, Coax, 50 MHz Align, Front End Assy J6 to Reference Assy J705	8121-1940
W62	Cable, Semi-rigid, Switch 4 Port 2 to A13A1 Input J9, Options 544, 550 with Option LNP or MPB	N9020-20130
W73	Cable, Semi-rigid, Synthesizer Assy J1 to Front End Assy J4, Option EP0	N9020-20301
W75	Option EXM, 544, 550	N9020-20167

Figure 17-14 Front End Parts (Options 544, 550, EP0, B5X)

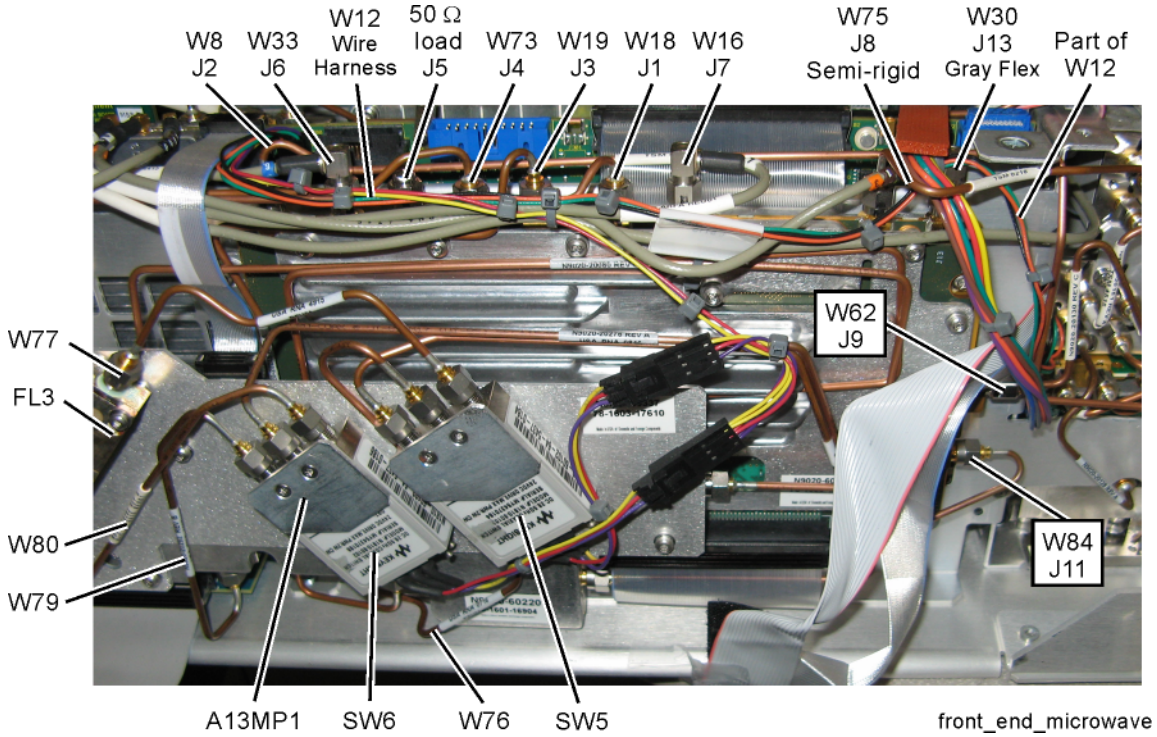

Table 17-16 Front End Parts (Options 544, 550, EP0, B5X)

Item	Description	Keysight Part Number
A13MP1	Bracket, Coax Switch Cover, Option B5X	N9030-00003
FL3	5.7 GHz Bandpass Filter on A13, Option B5X	9135-6217
SW5	Switch, Coax, on Option B5X Front End Assembly	N1810-60144
SW6	Switch, Coax, on Option B5X Front End Assembly	N1810-60144
W8	Cable, Semi-rigid, Front End assy J2 to Low Band Switch J2	N9020-20131
W12	Cable, Wire Harness, Preselector Bypass Switch Control, FEC J801	N9030-60035
W16	Cable, IF Out from Front End Assy J7 to FEC J902	8121-1862
W18	Cable, Semi-rigid, 2nd LO In, Reference Assy J702 to Front End Assy J1	N9020-20077
W19	Cable, Semi-rigid, AUX LO Out from Front End Assy J3 to Switched Filter Assy J6	N9020-20022
W30	Option 544, 550 with Option EXM	8121-2025
W33	Cable, Coax, 50 MHz Align, Front End Assy J6 to Reference Assy J705	8121-1940
W62	Cable, Semi-rigid, Switch 4 Port 2 to A13A1 Input J9, Options 544, 550 with Option LNP or MPB	N9020-20130

Table 17-16 Front End Parts (Options 544, 550, EP0, B5X)

Item	Description	Keysight Part Number
W73	Cable, Semi-rigid, Synthesizer Assy J1 to Front End Assy J4, Option EP0	N9020-20301
W75	Option EXM, 544, 550	N9020-20167
W76	Cable, Semi-rigid, Front End Assy IF Out to SW5 Port C, Option B5X, 508, 513, 526, 544, 550	N9020-20266
W77	Cable, Semi-rigid, SW5 Port 1 to BP Filter In, Option B5X	N9020-20268
W79	Cable, Semi-rigid, Switched Filter Out to SW6 Port 2, Option B5X	N9020-20292
W80	Cable, Semi-rigid, BP Filter Out to SW6 Port 1, Option B5X	N9020-20293
W84	Cable, Semi-rigid, SW6 port C to Front End Assy IF IN J11	N9020-20276

Figure 17-15 Front End Cables (A14 Synthesizer shown is Option EP1)

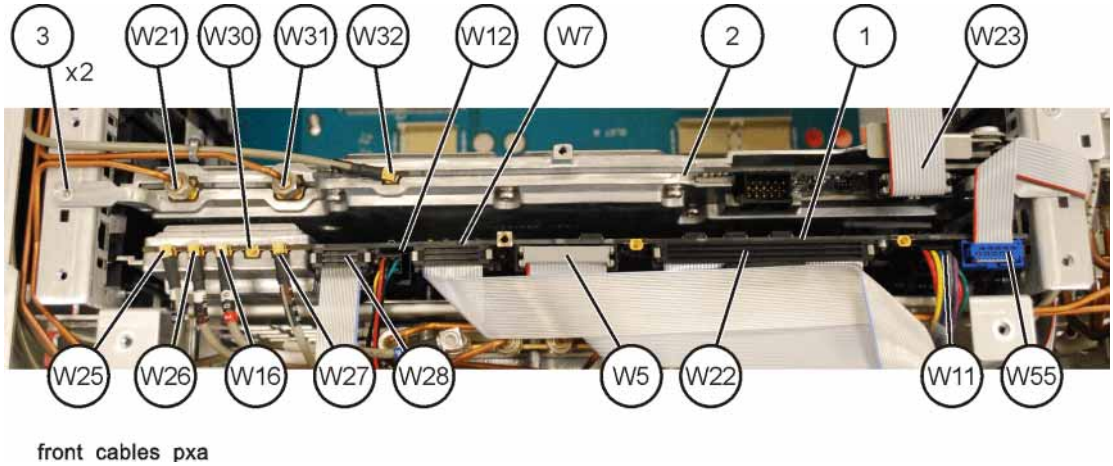

Table 17-17 Front End Cables

Item	Description	Keysight Part Number
1	A15 Front End Controller (FEC)	Option dependent
2	A14 Synthesizer Assembly	Option dependent
W5	Cable, Ribbon, Attenuator A/B to FEC J800	E4410-60157
W7	Cable, ribbon, Low Band Switch J4 to FEC J700	N9020-60092
W11	Cable, Wire Harness, YTF Control, FEC J300 to YTF J1	N9020-60059
W12	Cable, Wire Harness, Preselector Bypass Switch Control, FEC J801	Option dependent
W16	Cable, IF Out from Front End Assy J7 to FEC J902	8121-1862
W21	Cable, Semi-rigid, LO Synthesizer Assy J20 to Front End Assy J5, Without EP0	N9020-20019
W25	Cable, coax, Narrow Band IF Out, FEC J900 to Analog IF J100	8121-1865
W26	Cable, coax, Wideband IF Out, FEC J901 to Digital IF J15	8121-1919
W27	Cable, Coax, Aux IF Out, FEC J1100 to Rear Panel Aux IF Out	8121-1859
W28	Cable, Ribbon, Switched Filter control, FEC J1300 to Switched Filter J1	N9020-60064
W30	Option 544, 550 with Option EXM	8121-2025
W31	Cable, Semi-rigid, 4.8GHz 2nd LO. Reference Assy, J703 to Synthesizer Assy J4, Without EP0	N9020-20021
W32	Cable, Coax, 100 MHz, Reference Assy J706 to LO Synthesizer J10	8121-1401

Table 17-17 Front End Cables

Item	Description	Keysight Part Number
W55	Cable, Ribbon, Low Band Switch Bypass Control Switch 3 to FEC J802	Option dependent

Figure 17-16 Synthesizer Assembly Cables (Option EP0)

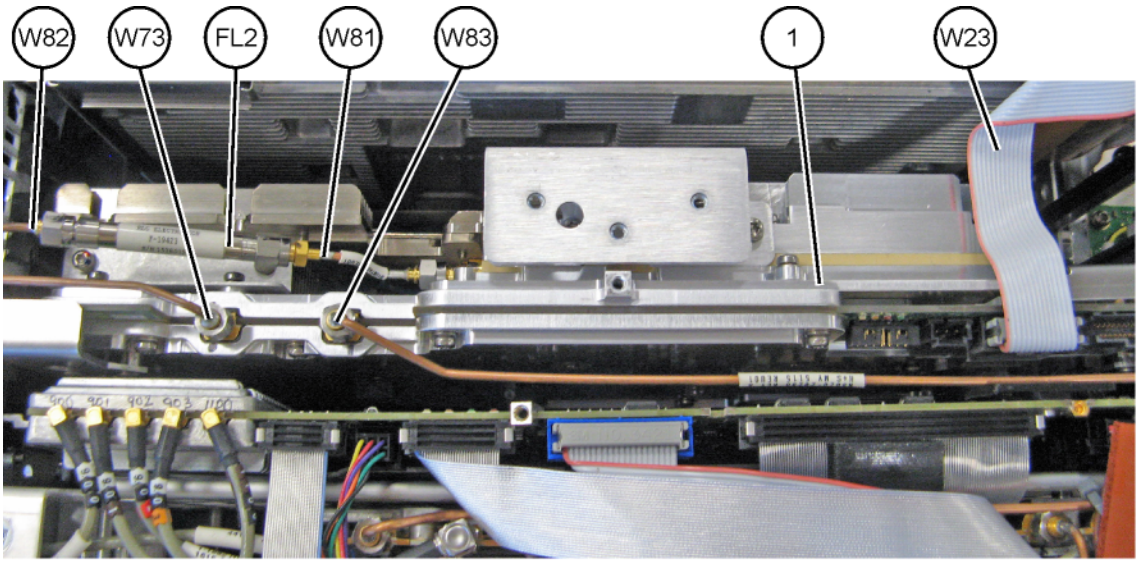

synthbd_cables_510

Table 17-18 Synthesizer Assembly Cables (Option EP0)

Item	Description	Keysight Part Number
1	A14 Option EP1	N9020-60008
FL2	7.2 GHz Bandpass Filter, Option EP0	9135-6218
W23	Cable, ribbon, YTO Control, LO Synthesizer J25 to YTO	N9020-60024
W73	Cable, Semi-rigid, Synthesizer Assy J1 to Front End Assy J4, Option EP0	N9020-20301
W81	Cable, Semi-rigid, DDS Synthesizer Assy J35002 to FL2 7.2 GHz BPF, Option EP0	N9020-20226
W82	Cable, Semi-rigid, Reference Assy J703 to FL2 7.2 GHz BPF, Option EP0	N9020-20303
W83	Cable, Semi-rigid, DDS Synthesizer Assy J2 to YTO Output Options 544, 550 with Option EP0	N9020-20298

Figure 17-17 Reference Assembly Cables (Option EP1)

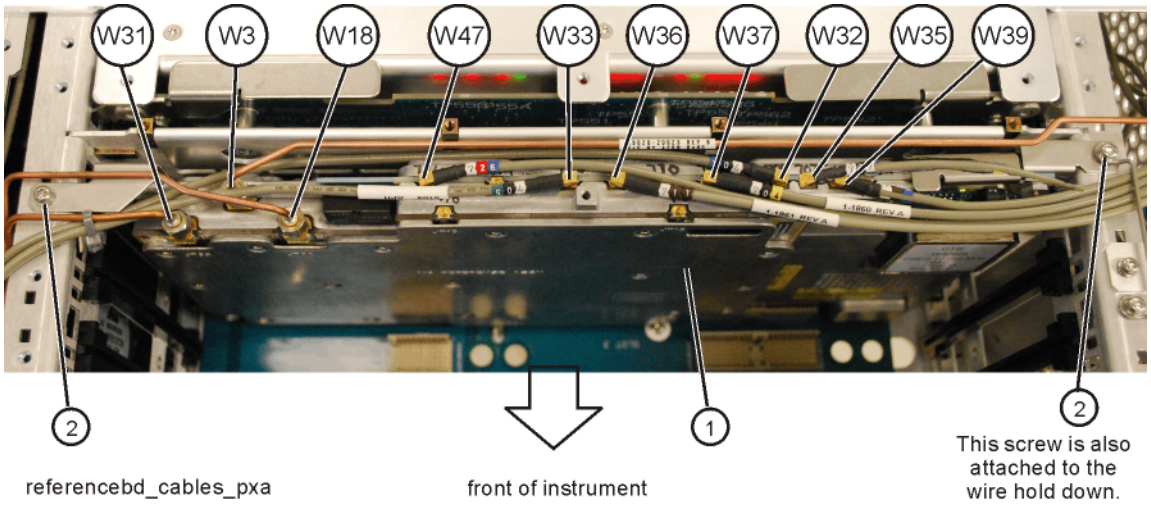

Table 17-19 Reference Assembly Cables (Option EP1)

Item	Description	Keysight Part Number
1	A16 Reference Assy	N9020-60188
W3	Cable, Semi-rigid, Cal In to Attenuator, Reference Assy J701 to Attenuator A, Options 544, 550	N9020-20072
W18	Cable, Semi-rigid, 2nd LO In, Reference Assy J702 to Front End Assy J1	N9020-20022
W31	Cable, Semi-rigid, 4.8GHz 2nd LO. Reference Assy, J703 to Synthesizer Assy J4, Without EP0	N9020-20021
W32	Cable, Coax, 100 MHz, Reference Assy J706 to LO Synthesizer J10	8121-1401
W33	Cable, Coax, 50 MHz Align, Front End Assy J6 to Reference Assy J705	8121-1940
W35	Cable Assembly, Flexible Coax, BBIQ Main Board J101 to Reference Assy J707, Option BBA	8121-1401
W36	Cable, Coax, 300 MHz, Reference Assy J711 to Analog IF J300	8121-1861
W37	Cable, Coax, External Reference IN, rear panel to Reference Assy J704	8121-1860
W39	Cable, Coax, 100 MHz ref B, Reference Assy J716 to Digital IF J14	8121-1401
W47	Cable, Coax, Step Cal, A3 Digital IF J17 to Reference Assy J726, Required if no Option B85, B1X, B2X, B5X	8121-1401

Figure 17-18 Reference Assembly Cables (Option EP0), and Wide Bandwidth Analog IF Cables (Option B2X, B5X)

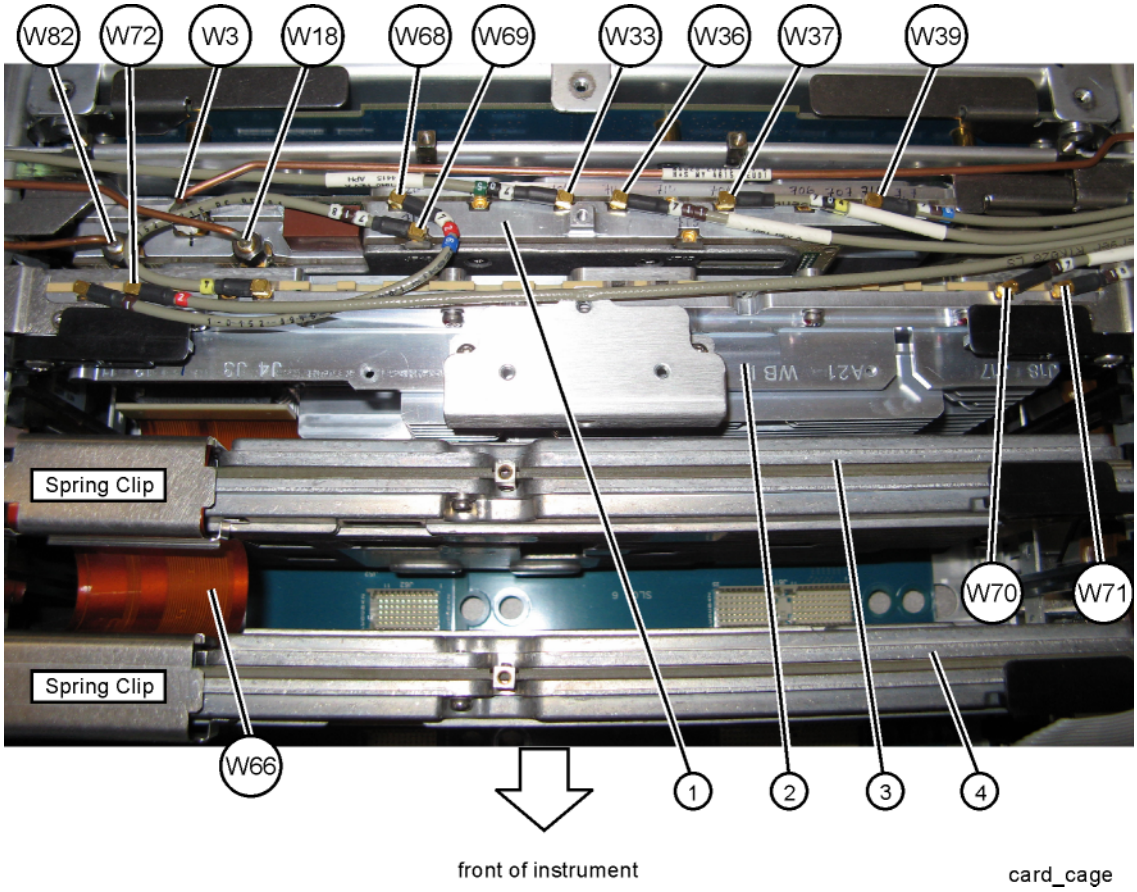

Table 17-20 Reference Assembly Cables (Option EP0), and Wide Bandwidth Analog IF Cables (Option B2X, B5X)

Item	Description	Keysight Part Number
1	A16 Option EP1 - New	N9020-60188
2	A25 Option B2X or B5X	N9020-60038
3	A26 Wideband Digital IF (WBDIF)	N9020-60311
4	A27 Wideband Digital IF (WBDIF) Option B5X - New	N9020-60311
W3	Cable, Semi-rigid, Cal In to Attenuator, Reference Assy J701 to Attenuator A, Options 544, 550	N9020-20072
W18	Cable, Semi-rigid, 2nd LO In, Reference Assy J702 to Front End Assy J1	N9020-20022
W33	Cable, Coax, 50 MHz Align, Front End Assy J6 to Reference Assy J705	8121-1940
W36	Cable, Coax, 300 MHz, Reference Assy J711 to Analog IF J300	8121-1861

Table 17-20 Reference Assembly Cables (Option EP0), and Wide Bandwidth Analog IF Cables (Option B2X, B5X)

Item	Description	Keysight Part Number
W37	Cable, Coax, External Reference IN, rear panel to Reference Assy J704	8121-1860
W39	Cable, Coax, 100 MHz ref B, Reference Assy J716 to Digital IF J14	8121-1401
W66	Cable, Flex Circuit, WBAIF to A26 WBDIF and A27 WBDIF, Option B5X	N9030-60034
W68	Cable, Coax, Reference Assy J726 to WBAIF J1, Option B2X or B5X	8121-0152
W69	Cable, Coax, Reference Assy J718 to WBAIF J4, Option B2X or B5X	8121-0152
W70	Cable, Coax, WBAIF J17 to FEC J901, FEC, Option B2X or B5X	8121-1865
W71	Cable, Coax, WBAIF J18 to Digital IF J15, Option B2X or B5X	8121-1401
W72	Cable, Coax, WBAIF J2 to Digital IF J17, Option B2X or B5X	8121-1401
W82	Cable, Semi-rigid, Reference Assy J703 to FL2 7.2 GHz BPF, Option EP0	N9020-20303

Figure 17-19 AIF Cables

Figure 17-20 DIF Cables

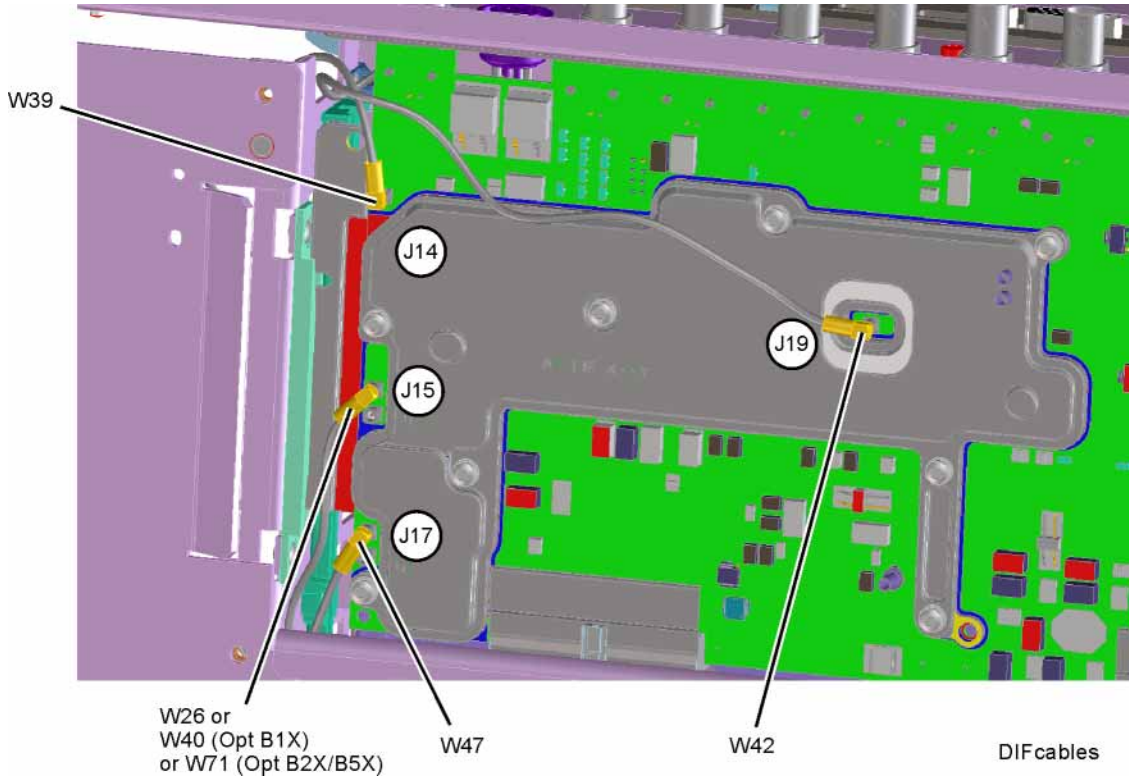

Table 17-21 AIF and DIF Cables

Item	Description	Keysight Part Number
W26	Cable, coax, Wideband IF Out, FEC J901 to Digital IF J15	8121-1919
W36	Cable, Coax, 300 MHz, Reference Assy J711 to Analog IF J300	8121-1861
W40	Cable, Coax, 250 MHz from WBAIF J102 to Digital IF J15, Option B85 or B1X	8121-1401
W42	Cable, Coax, 22.5 MHz IF Out, Analog IF J601 to Digital IF J19	8120-8868
W47	Cable, Coax, Step Cal, A3 Digital IF J17 to Reference Assy J726, Required if no Option B85, B1X, B2X, B5X	8121-1401

Figure 17-21 AIF/DIF Assemblies

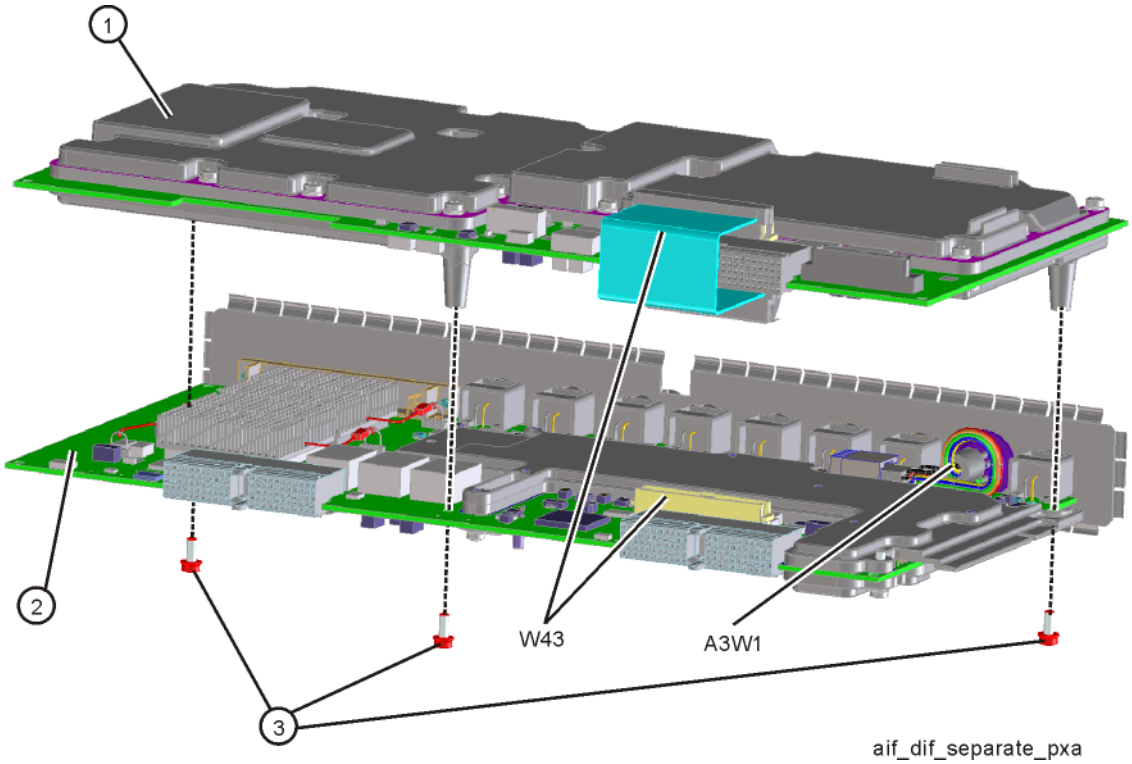

Table 17-22 AIF/DIF Assemblies

Item	Description	Keysight Part Number
1	A2 25 MHz Analog IF Assembly	N9020-60290
2	A3 40 MHz Digital IF Assembly	N9020-60016
3	Screw, M3 X 0.5 (8 mm long)	0515-0372
W43	Cable, Ribbon Interconnect from Analog IF J820 to Digital IF J30	N9020-60046
A3W1	Wire Harness, Smart Noise Source	N9020-60090

Figure 17-22 WBDIF Extension Board - Option RTS

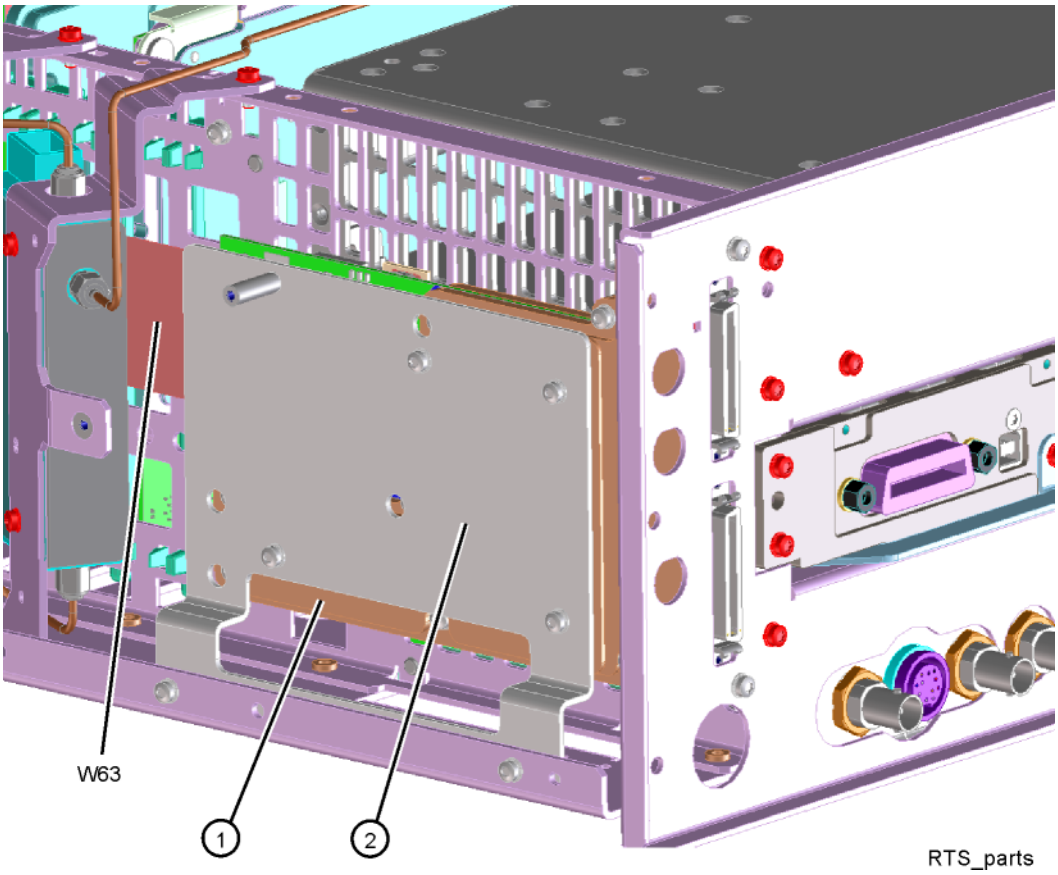

Table 17-23 WBDIF Extension Board - Option RTS

Item	Description	Keysight Part Number
1	A28 Wideband DIF Extension Board, Option RTS	N9020-60272
2	Bracket, WBDIF Extension Board, Option RTS	N9020-00067
W63	Cable, Ribbon, WBDIF J9000 to WBDIF Extension Board J1, Option RTS	N9020-60278

Figure 17-23 Motherboard

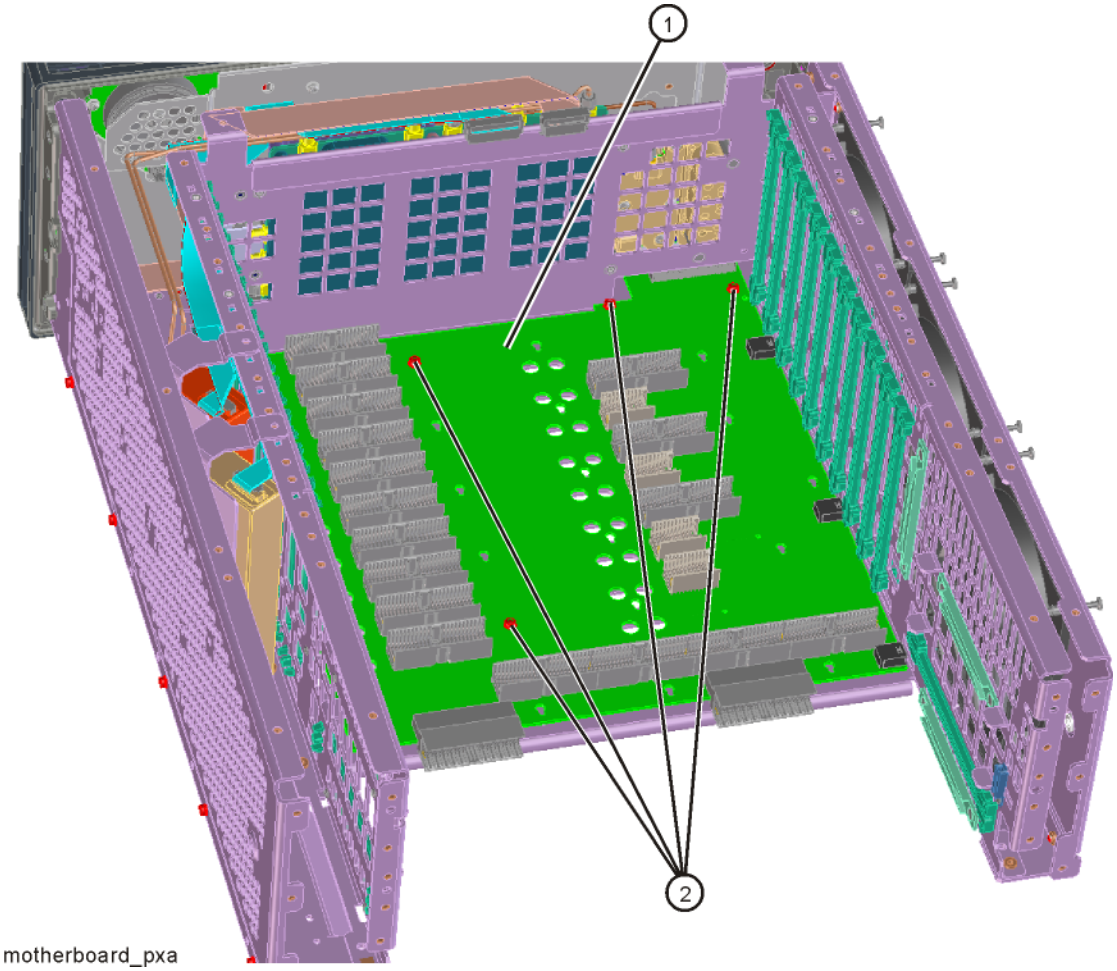

Table 17-24 Motherboard

Item	Description	Keysight Part Number
1	A8 Motherboard	N9030-63002
2	Screw M3 X0.5 (8 mm long)	0515-0372

Figure 17-24 Chassis

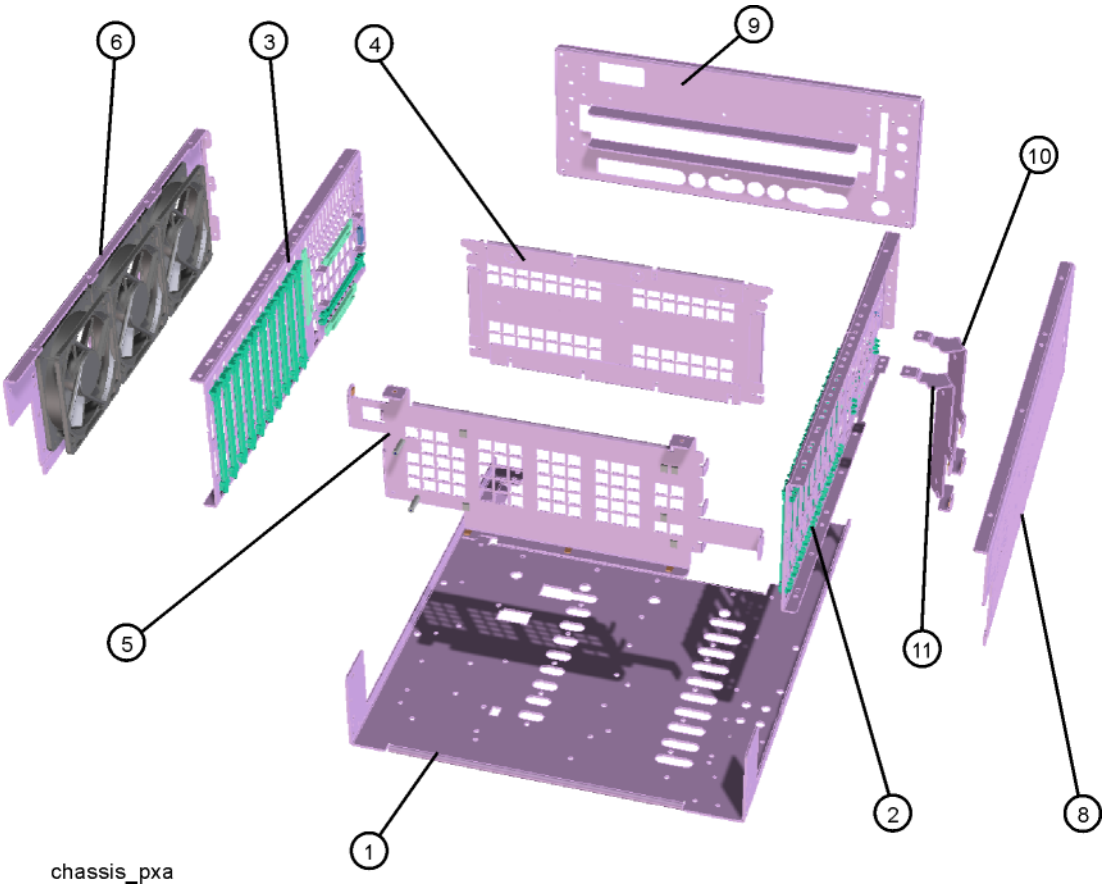

Table 17-25 Chassis

Item	Description	Keysight Part Number
1	Chassis Base	N9020-00015
2	Chassis Side, Right, Inner	W1312-00116
3	Chassis Side, Left, Inner	W1312-00117
4	Bracket, Midplane	W1312-00048
5	Bracket, Chassis Front	W1312-00098
6	Chassis Side, Left, Outer, Fans	W1312-00118
8	Chassis Side, Right, Outer	N9020-00014
9	Rear Frame	N9020-00065
10 + 11	Bracket, Attenuator, used for both Attenuators	Option dependent

Figure 17-25 Fan Hardware

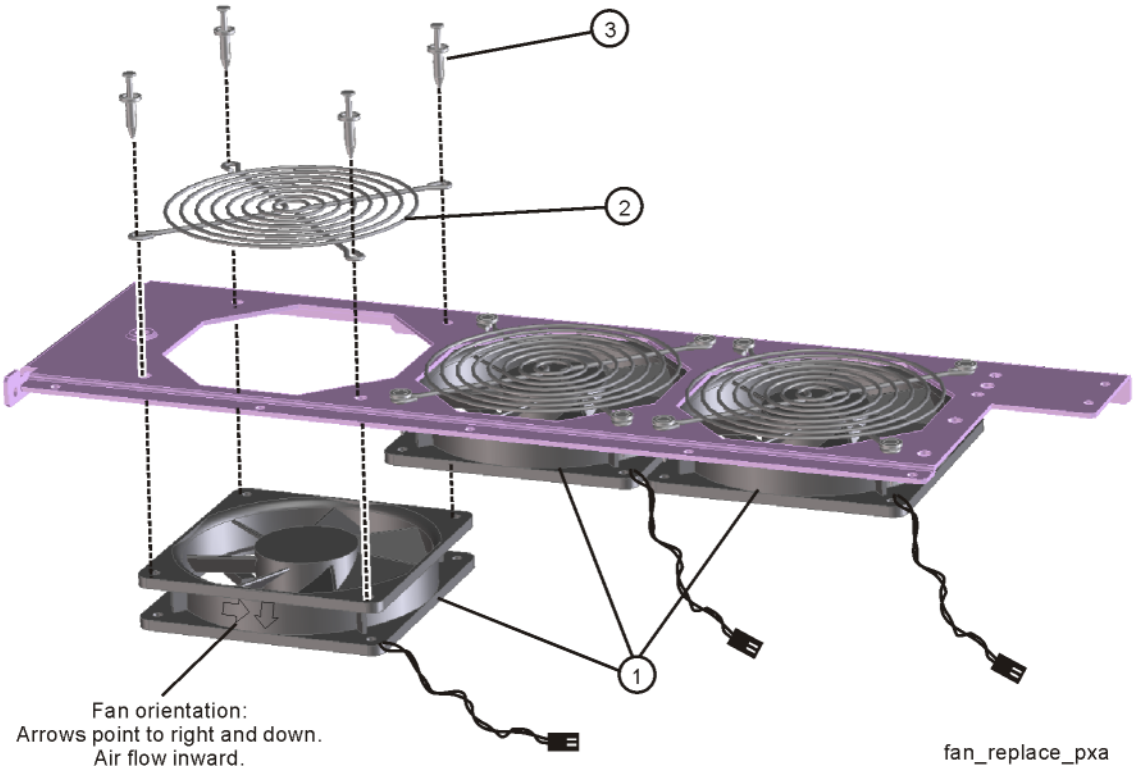

Table 17-26 Fan Hardware

Item	Description	Keysight Part Number
1	B1, B2, B3 Fan	3160-4199
2	Fan Guard, Steel	3160-0281
3	Rivet, Fan Mounting	0361-1272

Figure 17-26 Input Connector

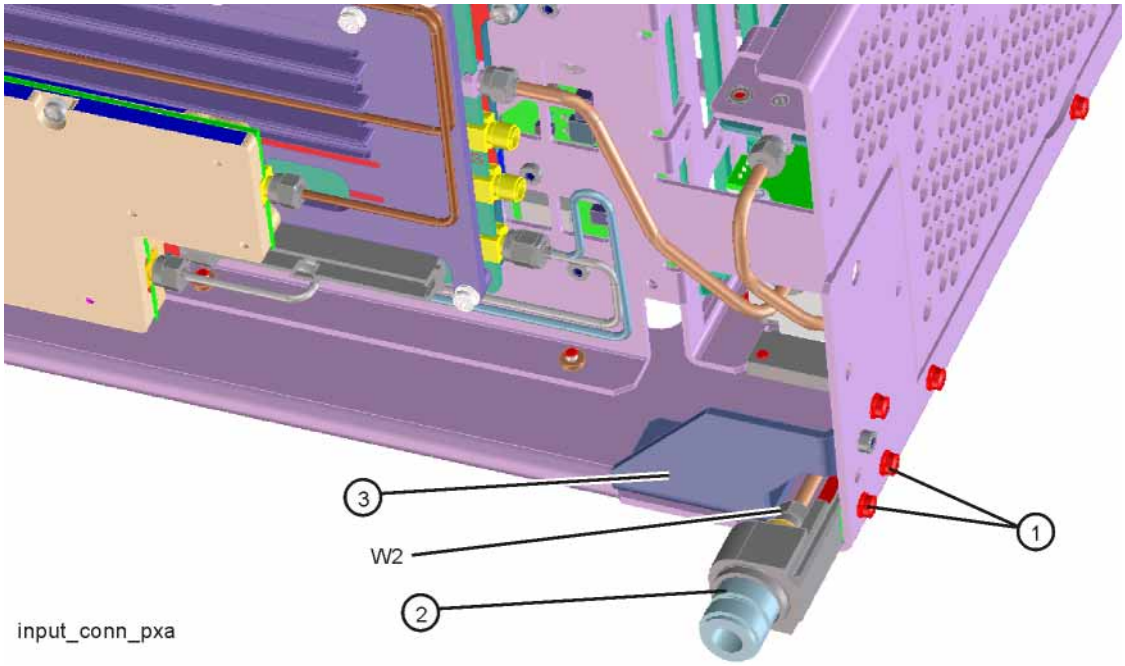

Table 17-27 Input Connector

Item	Description	Keysight Part Number
1	Screw M3 X 0.5 (8 mm long)	0515-0372
2	J1 Input Connector Assembly	
	Type-N Input, Option CNF	N9020-60196
	3.5 mm Input, Option C35	N9039-60030
W2	Cable, Semi-rigid, RF Input to Attenuator A (Option C35) 3.5 mm Input	N9020-20139
3	Gusset, Chassis, Near RF Input Connector	W1312-00093

Figure 17-27 Front Frame Parts

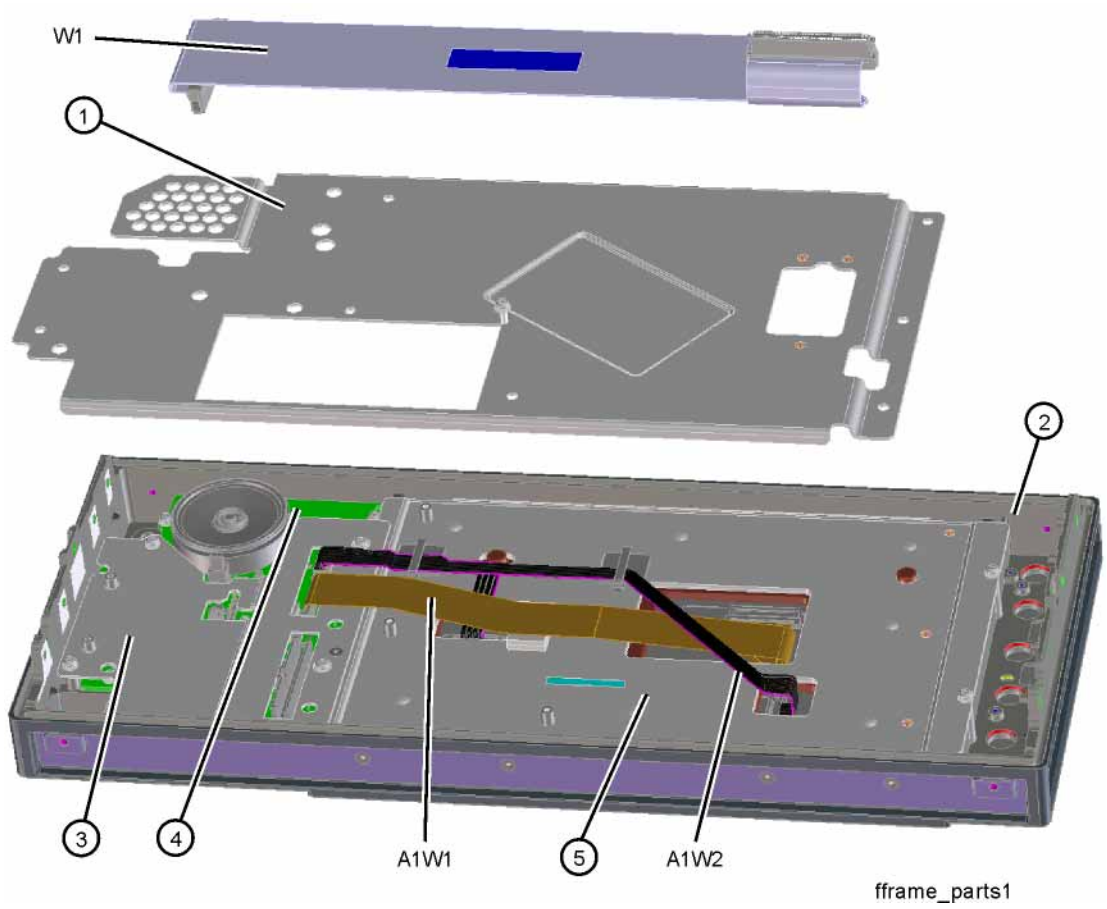

Table 17-28 Front Frame Parts

Item	Description	Keysight Part Number
1	A1MP14 Front Panel Shield	N9020-00066
2	A1A1 Front Frame	N9020-60299
3	A1MP10 Bracket Front Panel Shield	N9020-00064
4	A1A2 Front Panel Controller Board	
	Serial Number <MY/SG/US62490400	---[a]
	Serial Number ≥MY/SG/US62490400	N9020-63296
5	A1MP11 Display Bracket, Front Panel	N9020-00078
A1W1	Flex Circuit, Display to Front Panel Control Board	N9020-60273
A1W2	Cable Assembly, Backlight	N9020-60217

a. Original part number is not orderable, see N9020-60268 kit.

Figure 17-28 Front Frame Exploded View

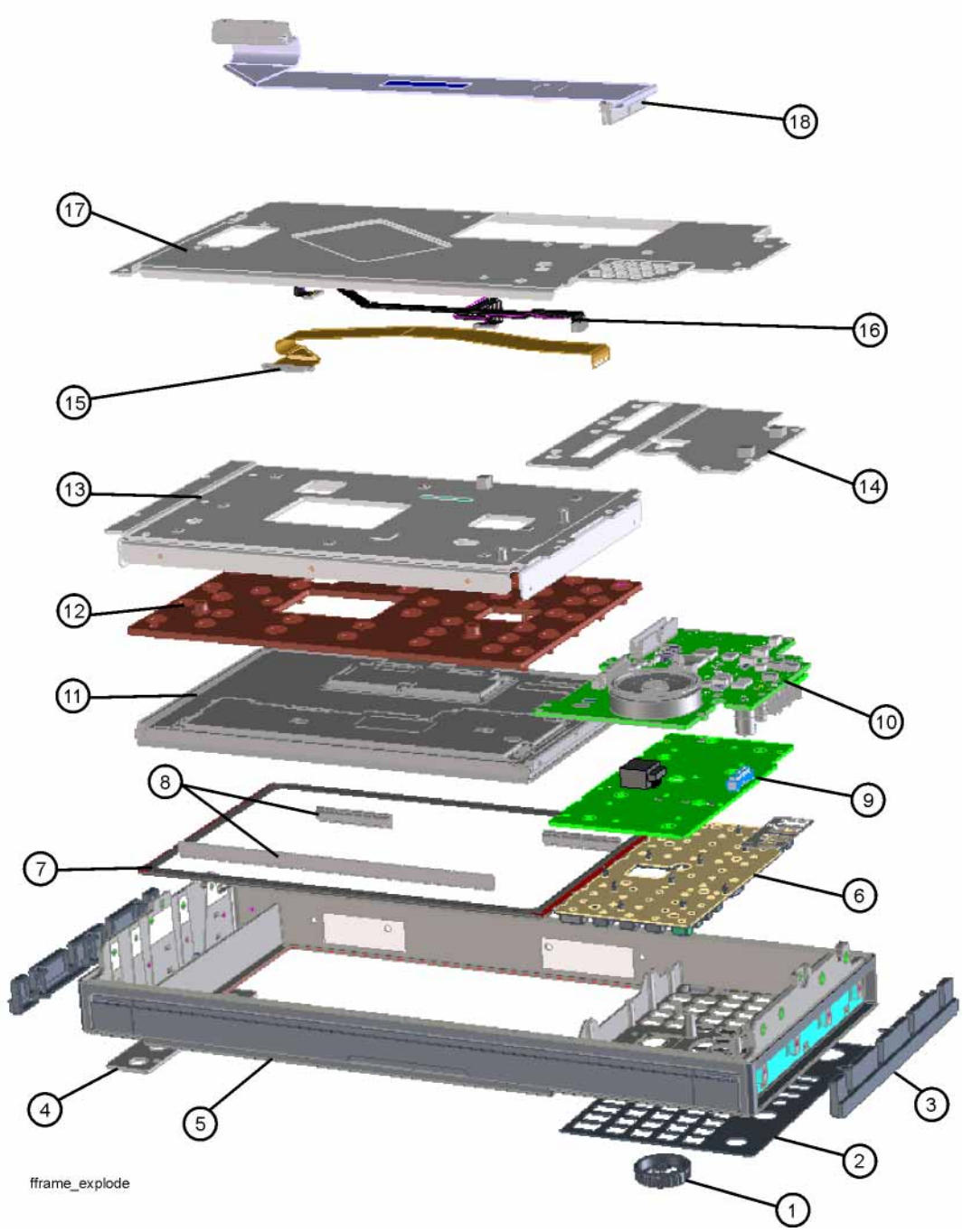

Table 17-29 Front Frame Exploded View

Item	Description	Keysight Part Number
1	RPG Knob	W1312-40179
2	Overlay, Keyboard	N9020-80127
3	Front Frame Side Trim Strip (plastic, 2 ea)	N9020-40018
4	Cover Plate	N9020-00002
5	Front Frame	---[a]
6	A1A5 Main Keypad	N9020-40001
7	Display Boot	N9020-40002
8	EMI Gasket	---[a]
9	A1A4 Main Keyboard	N9020-63275
10	A1A2 Front Panel Controller Board Serial Number ≥MY/SG/US62490400 Serial Number <MY/SG/US62490400	 N9020-63296 ---[b]
11	A1A3 Liquid Crystal Display 10.6-in w/PCAP Touch 1280X768-Pixels Serial Number ≥MY/SG/US62490400 Serial Number <MY/SG/US62490400	 2090-1158 ---[b]
12	A1MP9 Display Compression Pad Serial Number ≥MY/SG/US62490400 Serial Number <MY/SG/US62490400	 N9020-40026 N9020-40003
13	A1MP11 Display Bracket, Front Panel	N9020-00078
14	A1MP10 Bracket Front Panel Shield	N9020-00064
15	A1W1 Flex Circuit, Display to Front Panel Control Board	N9020-60273
16	A1W2 Cable Assembly, Backlight	N9020-60217
17	A1MP14 Front Panel Shield	N9020-00066
18	W1 Cable, Ribbon 68 pin, Front Panel Interface to Motherboard	N9020-60216

a. Non-orderable item, see A1A1.
b. Original part number is not orderable, see N9020-60268 kit. Note that the part may have already been replaced with the newer part, in which case, see part number for serial number ≥MY/SG/US62490400.

18 Assembly Replacement Procedures

What You Will Find in This Chapter

Procedures in this chapter enable you to locate, remove, and replace the following major assemblies in your instrument.

Refer to Chapter 17, “Replaceable Parts.” for part numbers, assembly descriptions, and ordering information.

Instrument Outer Case on page 439

Top Brace and Power Supply Bracket on page 441

Front Frame Assembly on page 443

RF Area (Options 503, 508, 513, 526) on page 455

RF Area (Options 544, 550) on page 491

RF Front End Assembly on page 513

Front End Controller on page 516

LO Synthesizer Assembly on page 518

Reference Assembly on page 520

Option B1X on page 524

Option BBA on page 526

Midplane Board on page 527

Rear Panel on page 529

Power Supply Assembly on page 530

CPU Assembly on page 532

Disk Drive on page 534

AIF/DIF Assembly on page 540

Wideband Extension Board (Option RTS) on page 544

Motherboard Assembly on page 547

Fan Assembly on page 552

Input Connector Assembly on page 556

Before Starting

Before starting to disassemble the instrument:

- Check that you are familiar with the safety symbols marked on the instrument. And, read the general safety considerations and the safety note definitions given in the front of this guide.
- The instrument contains static sensitive components. Read the section entitled "ESD Information" on page 21.

Safety

WARNING The opening of covers or removal of parts is likely to expose dangerous voltages. Disconnect the product from all voltage sources while it is being opened.

WARNING The instrument contains potentially hazardous voltages. Refer to the safety symbols on the instrument and the general safety considerations at the beginning of this service guide before operating the unit with the cover removed. Failure to heed the safety precautions can result in severe or fatal injury.

Tools you will need

Figure 18-1 TORX Tool

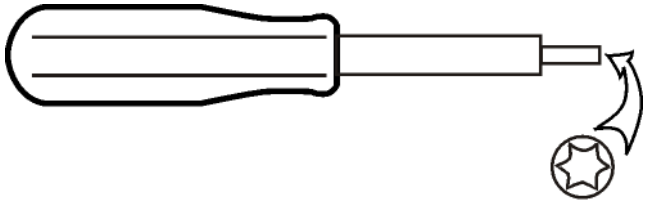

Table 18-1

Description	Keysight Part Number
TORX Hand Driver - Size T-8	source locally
TORX Hand Driver - Size T-10	source locally
TORX Hand Driver - Size T-20	source locally
9/16 inch nut driver	source locally
1/4 inch nut driver	source locally
5/16 inch open-end wrench	source locally
1/4 inch open-end wrench	source locally
1/4 inch socket on 4 lb torque wrench	source locally

Adjustments Tests after an instrument repair

Refer to Table 19-1, “Post-Repair Testing Requirements,” for information about post-repair procedures. If one or more instrument assemblies have been repaired or replaced, perform the related adjustments and performance verification tests.

Major Assembly Locations

Figure 18-2 Major Assemblies

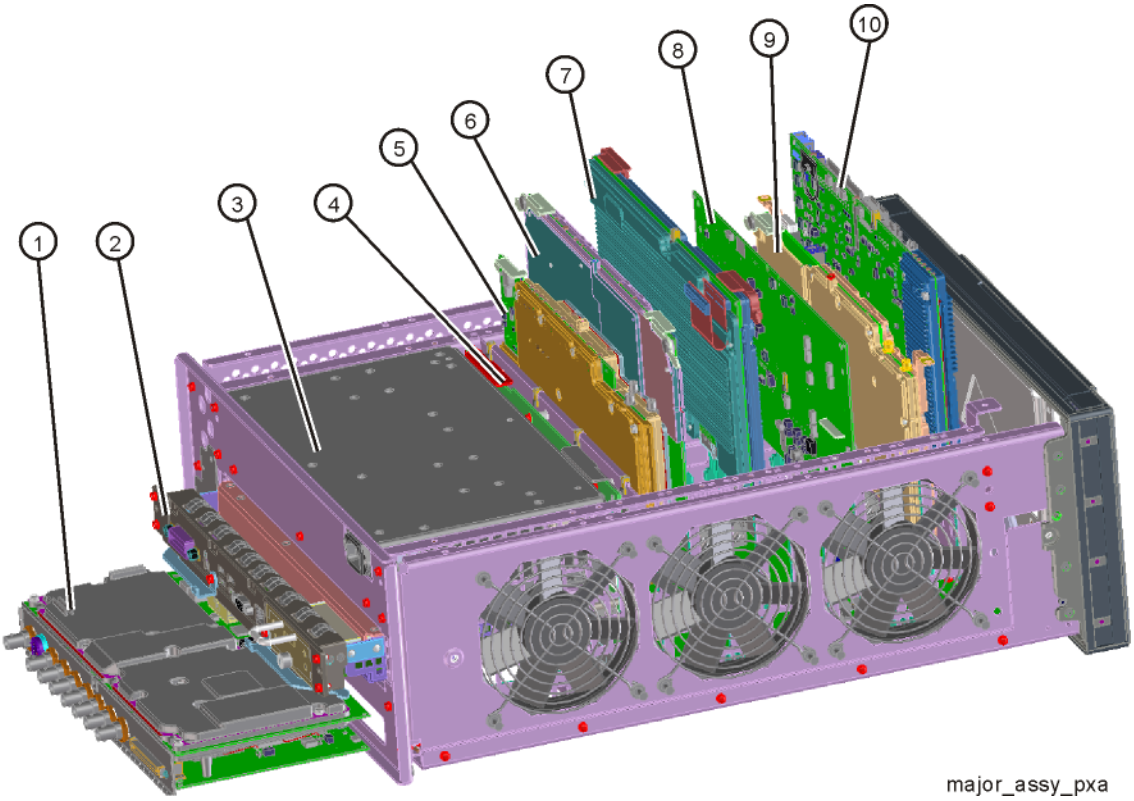

Table 18-2

Item	Description
1	A2 25 MHz Analog IF Assembly and A3 40 MHz Digital IF Assembly
2	A4 CPU Assembly
3	A6 Power Supply
4	A7 Midplane
5	A16 Reference Assy
6	A25 Wideband Analog IF (WBAIF)
7	A26 Wideband Digital IF (WBDIF)
8	A19 BBIQ Main Board, Option BBA
9	A14 Synthesizer Assembly
10	A15 Front End Controller (FEC)

Instrument Outer Case

CAUTION If the instrument is placed on its face during any of the following procedures, be sure to use a soft surface or soft cloth to avoid damage to the front panel, keys, or input connector.

Removal

1. Disconnect the instrument from ac power.
2. Refer to Figure 18-3. Using the T-20 driver, remove the four screws (two on each side) **(1)** that attach the handle strap **(2)** on each side of the instrument.
3. Remove the bottom feet and locks **(6)** by lifting the tabs on the feet and sliding to disengage from the outer case.
4. Using the T-20 driver, remove the four screws (including washers) **(3)** that hold the rear feet **(4)** in place.
5. Pull the instrument cover **(5)** off towards the rear of the instrument.

Figure 18-3 Instrument Outer Case Removal

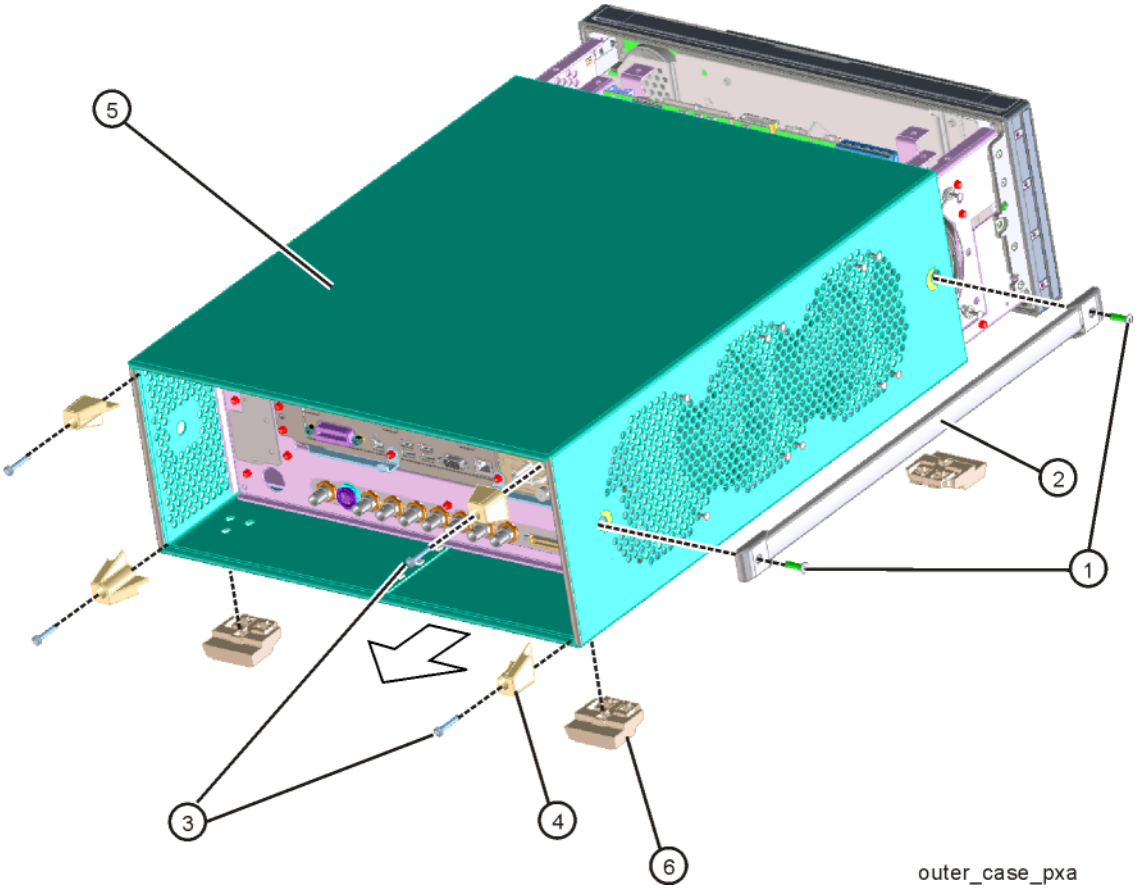

Replacement

1. Disconnect the instrument from ac power.
2. Slide the instrument cover back onto the deck from the rear. The seam on the cover should be on the bottom. Be sure the cover seats into the gasket groove in the Front Frame Assembly.
3. Replace the four rear feet to the rear of the instrument. Torque the rear feet screws (0515-1619 and 3050-0893 washers) to 21 inch pounds.
4. Replace the bottom feet by sliding into place until they snap in. Install the locks by pressing in flat.
5. Replace the handle straps on both sides of the instrument. Torque the handle strap screws to 21 inch pounds.

Top Brace and Power Supply Bracket

Removal

1. Remove the instrument outer case. Refer to the Instrument Outer Case removal procedure.
2. Refer to Figure 18-4. To remove the top brace **(1)**, use the T-10 driver to remove the twelve panhead screws **(3)** (0515-0372) attaching the top brace to the chassis. Remove the wire hold down 1 (as shown in Figure 18-5). Remove the twelve flathead screws (number of screws may vary) **(4)** (0515-1946) attaching the top brace to the boards.
3. To remove the power supply bracket **(2)**, use the T-10 driver to remove the eight screws **(5)** (0515-0372) attaching the power supply bracket to the instrument and the three screws **(6)** (0515-1946) attaching the power supply bracket to the power supply.

Figure 18-4 Top Brace and Power Supply Bracket Removal

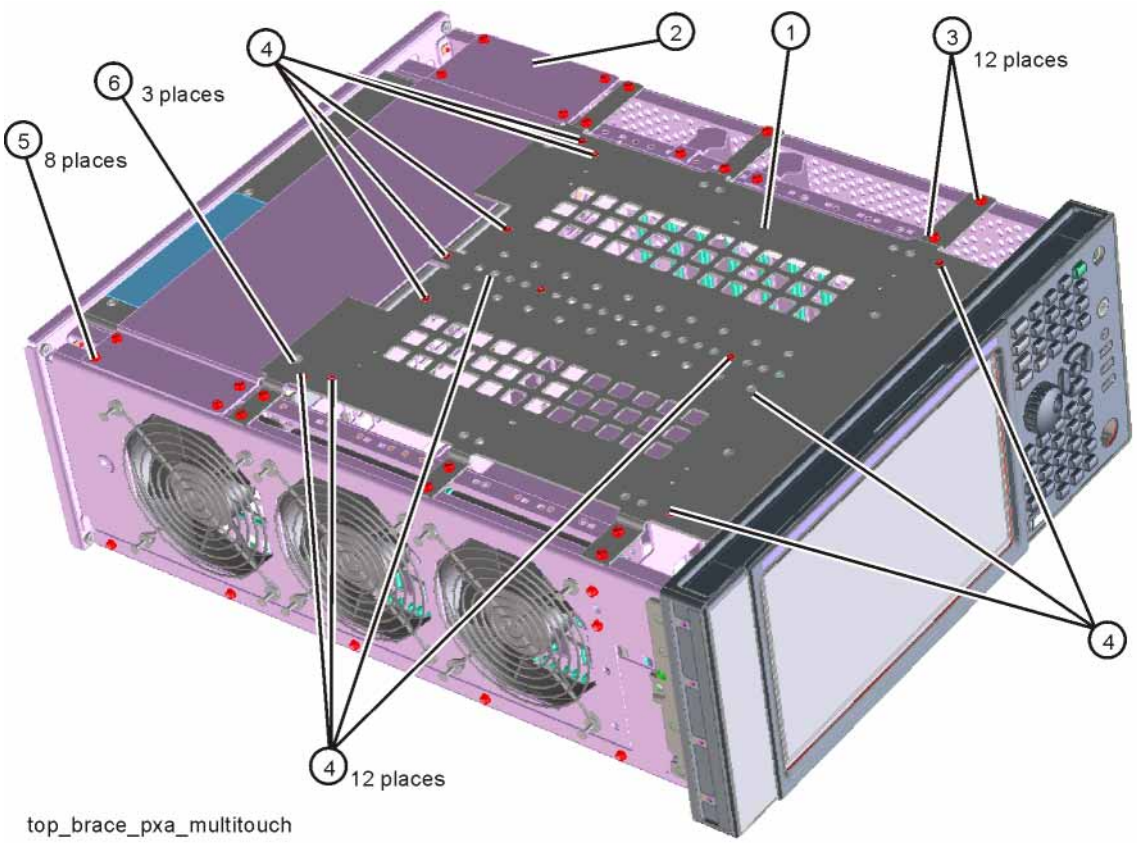

Figure 18-5 Wire Hold Downs

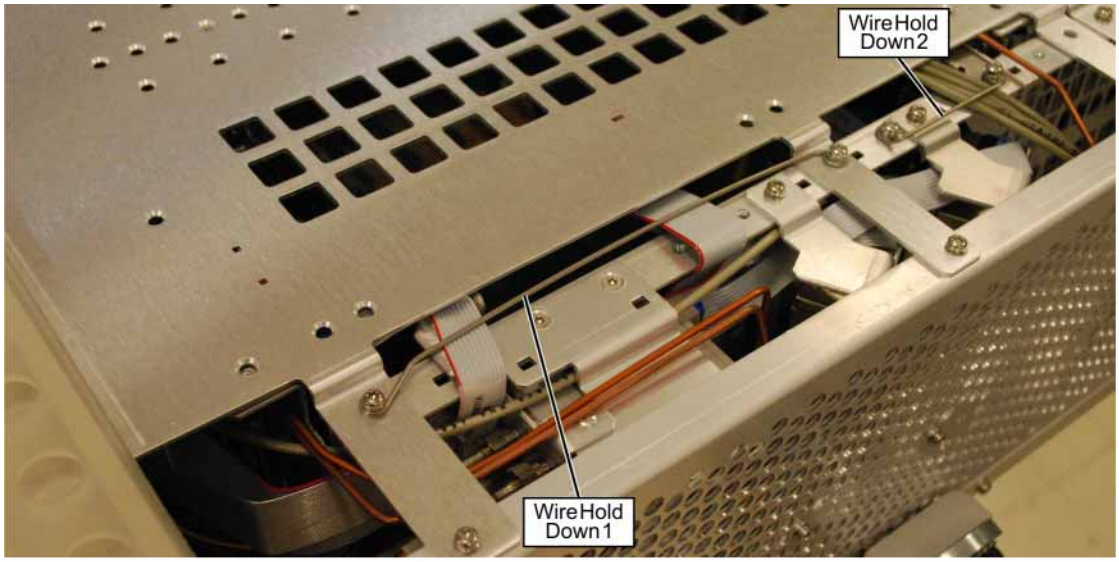

cable_hold_downs

Replacement

1. Refer to Figure 18-4. To replace the top brace or the power supply bracket, place them into the correct position and attach the screws referred to in the removal process. Reinstall wire hold down 1. Torque to 9 inch-pounds.

Front Frame Assembly

Removal

NOTE Make sure any connectors on the front panel are removed.

1. Remove the instrument outer case. Refer to the Instrument Outer Case removal procedure.
2. Refer to Figure 18-6. If Option EXM, External Mixing, is installed, disconnect semi-rigid cable connection **(1)** on LO/IF cable using a ¼-inch wrench to hold the cable and a 5/16-inch wrench to loosen the SMA nut.
3. Refer to Figure 18-6. Using the T-10 driver, remove the eight screws **(2)** (0515-2032), four on each side, to detach the Front Frame Assembly from the chassis.
4. Refer to Figure 18-7. Pull the Front Frame Assembly carefully away from the chassis. Remove the ribbon cable W1 from the motherboard. The cable has locking tabs on each side, pinch and pull to release. If Option 107, Audio Input and Digitizer, is installed, use a 9/16-inch wrench to remove the nut at the Audio In connector and carefully push the connector through the Front Frame assembly. Leave the connector and cable W50 attached to the A29 Audio Digitizer Assembly.

Figure 18-6 Front Frame Assembly Removal

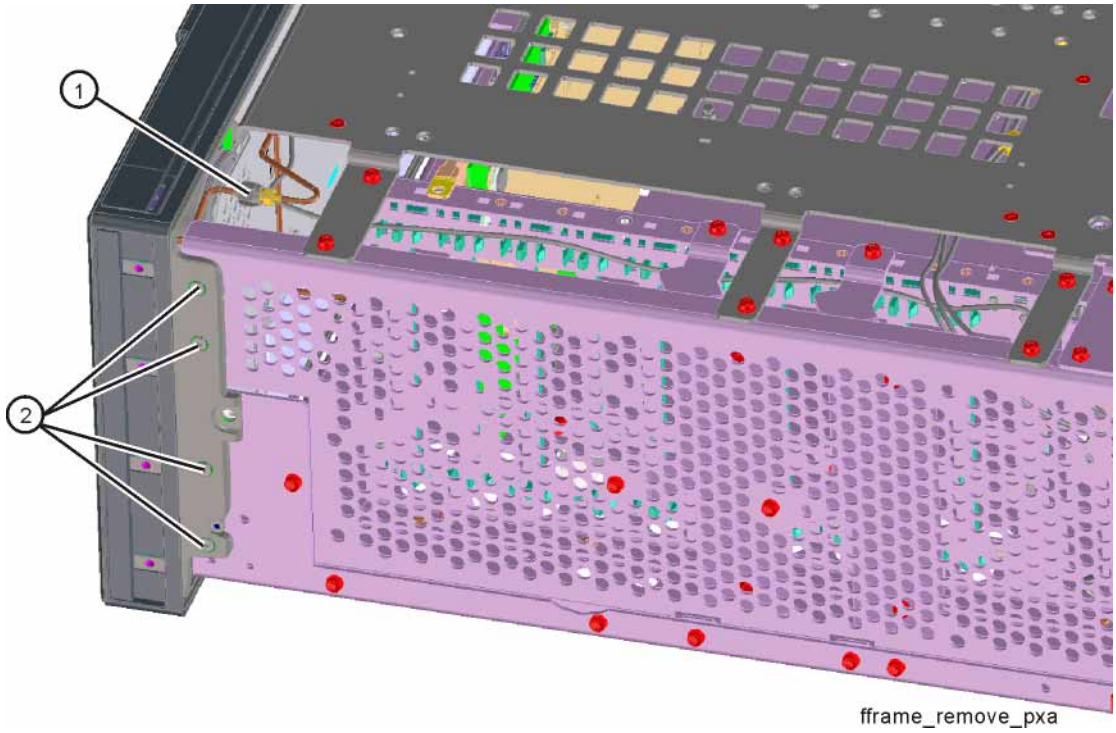

Figure 18-7 Front Panel Cable

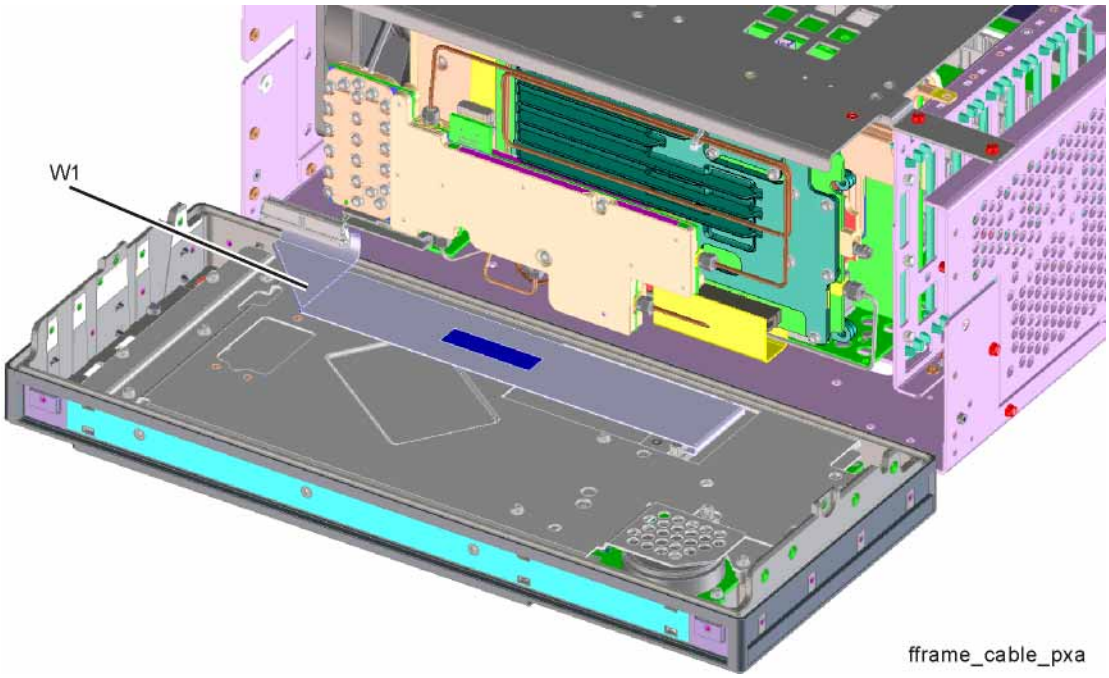

Replacement

1. Reattach the ribbon cable W1. Ensure the locking tabs are engaged.
2. Refer to Figure 18-6. Carefully position the Front Frame Assembly onto the chassis. Ensure no cables are crushed. Replace the eight screws **(2)** (0515-2032), four on each side of the chassis. Torque to 9 inch pounds.
3. If option EXM, External Mixing, is installed attach semi-rigid LO/IF cable. Torque to 10 inch-pounds.
4. Replace the outer case. Refer to the Instrument Outer Case replacement procedure.

Front Frame Assembly Components

NOTE Access to any of the Front Frame assemblies requires removal of the Front Frame Assembly from the chassis.

Figure 18-8 Front Frame Parts

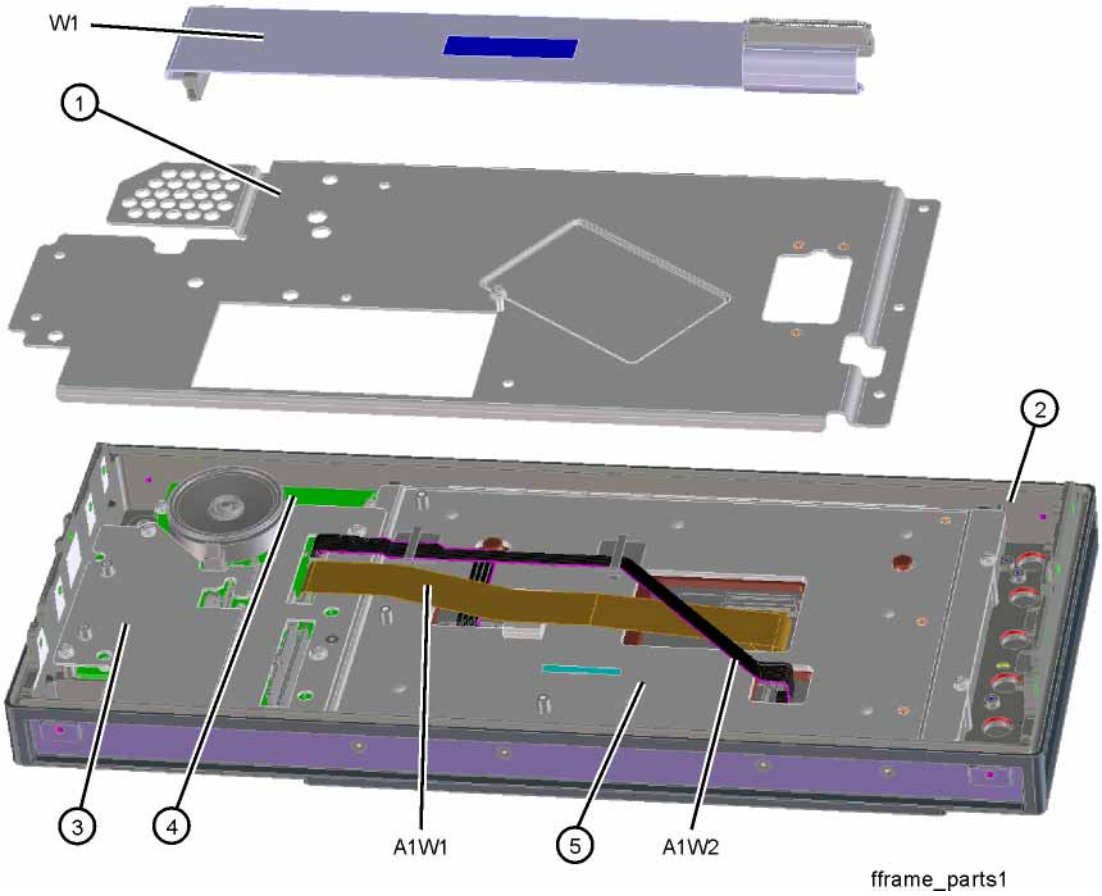

Table 18-3 Front Frame Parts

Item	Description
1	A1MP14 Front Panel Shield
2	A1A1 Front Frame
3	A1MP10 Bracket Front Panel Shield
4	A1A2 Front Panel Controller Board
5	A1MP11 Display Bracket, Front Panel
A1W1	Flex Circuit, Display to Front Panel Control Board
A1W2	Cable Assembly, Backlight

Figure 18-9 Front Frame Exploded View

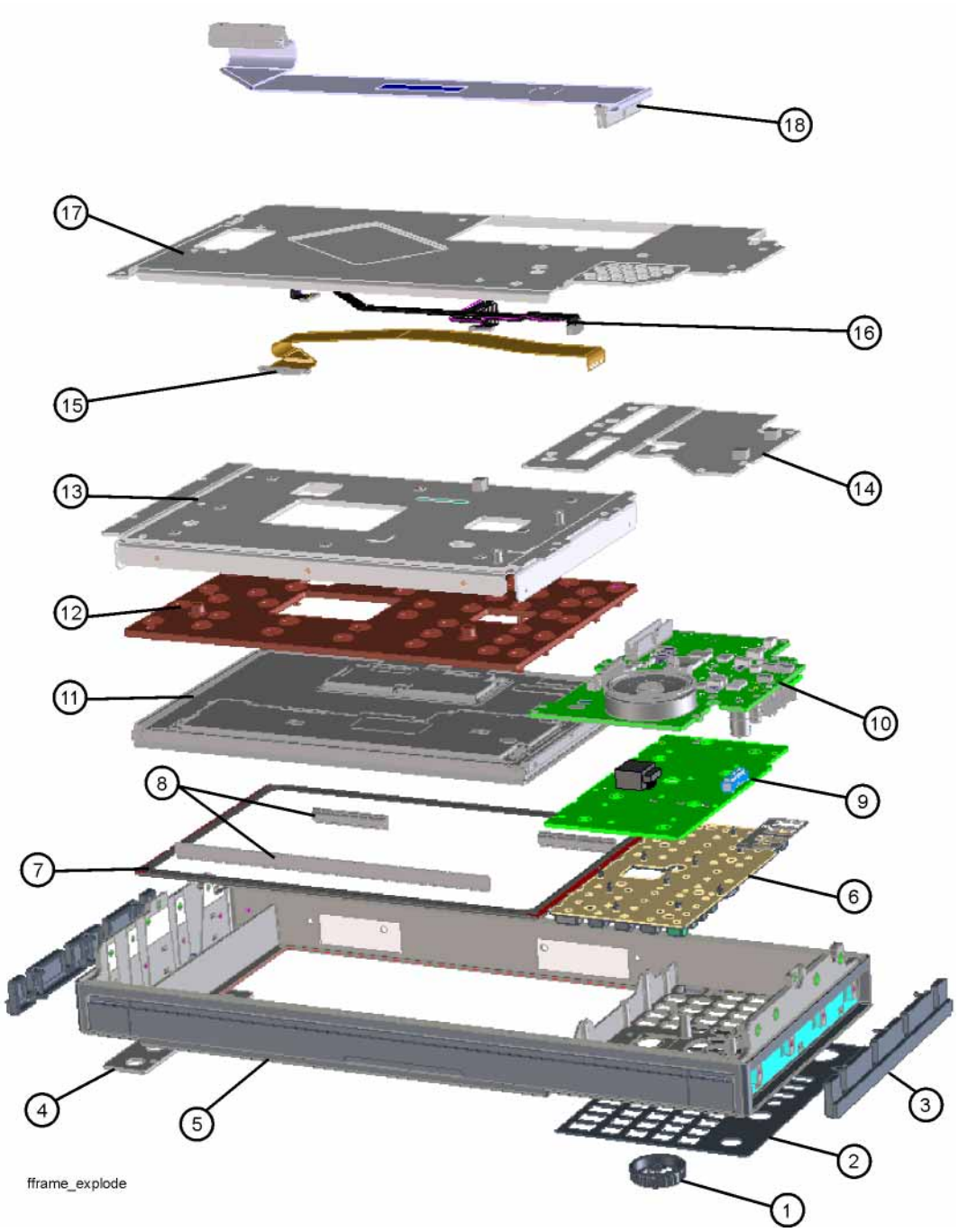

Table 18-4

Item	Description
1	RPG Knob
2	Overlay, Keyboard
3	Front Frame Side Trim Strip (plastic, 2 ea)
4	Cover Plate
5	Front Frame
6	A1A5 Main Keypad
7	Braided Gasket
8	EMI Gasket
9	A1A4 Main Keyboard
10	A1A2 Front Panel Controller Board
11	A1A3 Liquid Crystal Display 10.6-in w/PCAP Touch 1280X768-Pixels
12	A1MP9 Display Compression Pad
13	A1MP11 Display Bracket, Front Panel
14	A1MP10 Bracket Front Panel Shield
15	A1W1 Flex Circuit, Display to Front Panel Control Board
16	A1W2 Cable Assembly, Backlight
17	A1MP14 Front Panel Shield
18	W1 Cable, Ribbon 68 pin, Front Panel Interface to Motherboard

Front Panel Shield

Figure 18-10 Front Panel Shield

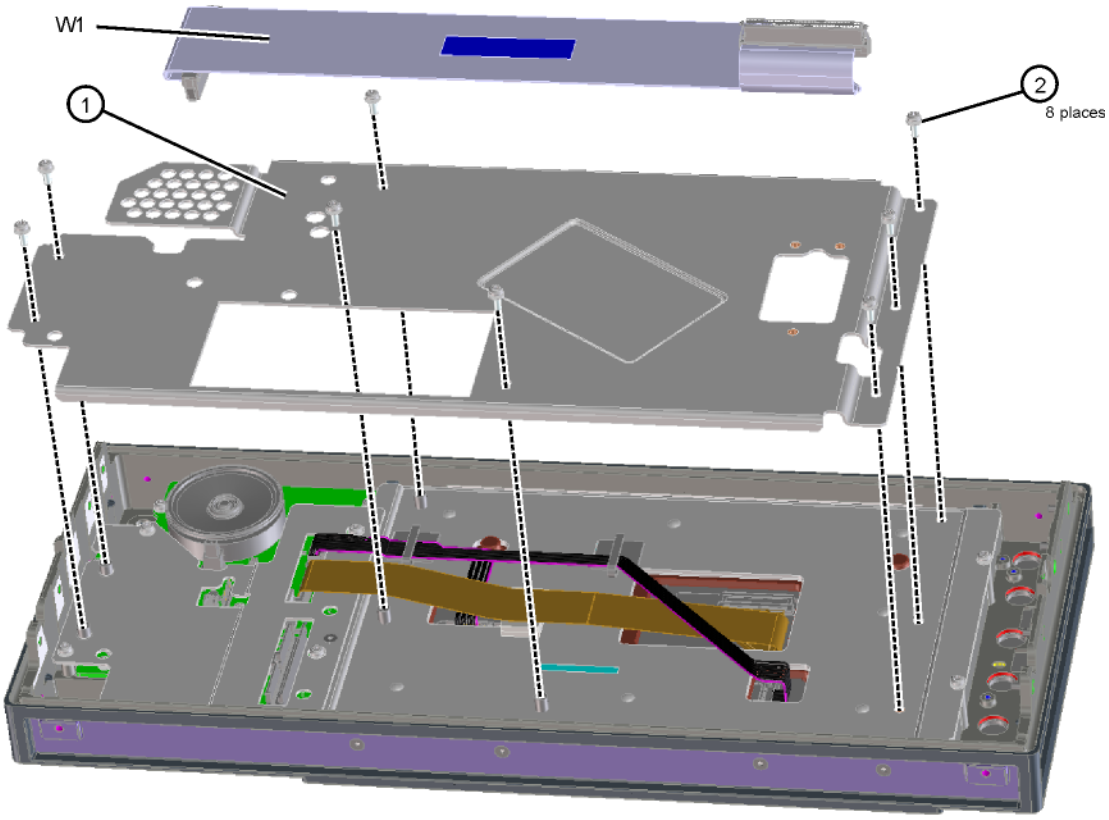

fframe_shield

1. Refer to Figure 18-10. Remove ribbon cable W1.
2. To remove the front panel shield **(1)**, remove the eight screws **(2)** (0515-0372).
3. When replacing the front panel shield, torque all screws to 9 inch-pounds, When replacing ribbon cable W1 press firmly on each side to ensure the hooks catch on the boards mating connector.

Front Panel Cables

1. Refer to Figure 18-8. Remove cables A1W1 and A1W2.
2. When replacing the cables, dress in the appropriate cable clamps.

Front Panel Control Board and Shield

1. Refer to Figure 18-11. To remove the Front Panel Control Shield **(1)**, remove the two screws **(2)** (0515-1946) and the two screws **(3)** (0515-0372).

Figure 18-11 Front Panel Control Shield and Board Removal

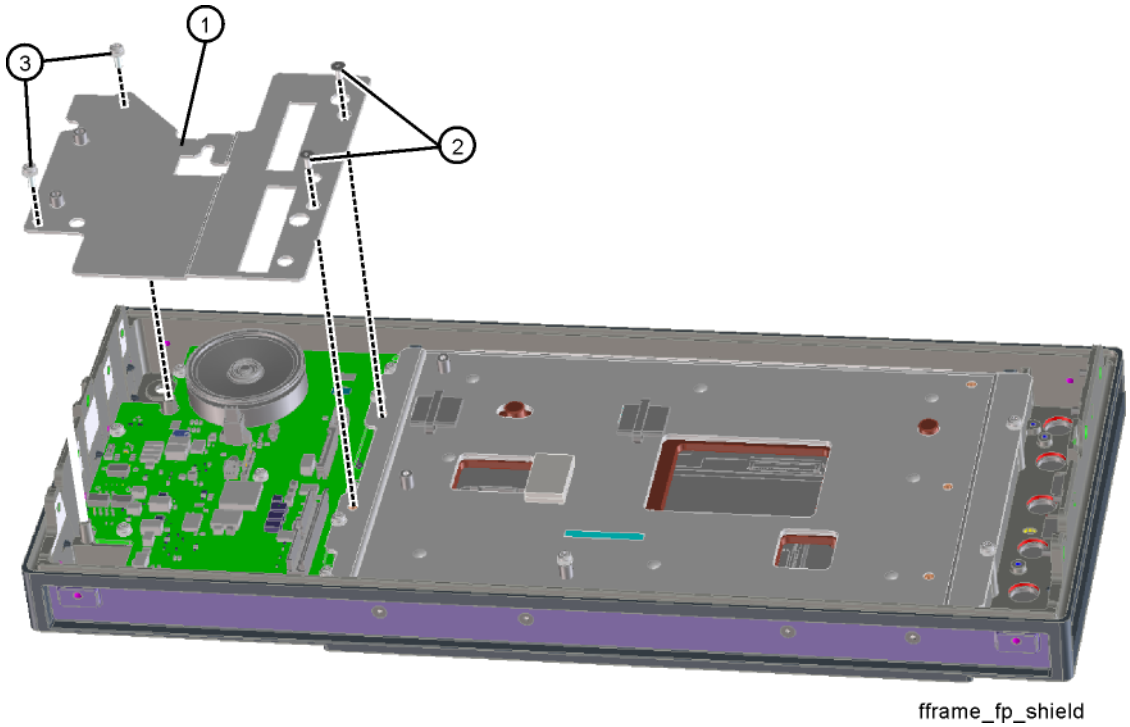

2. Refer to Figure 18-12. To remove the Front Panel Control board **(1)**, remove the seven screws **(2)** (0515-0372). When replacing the board torque the screws to 9 inch-pounds.

Figure 18-12 Front Panel Control Board

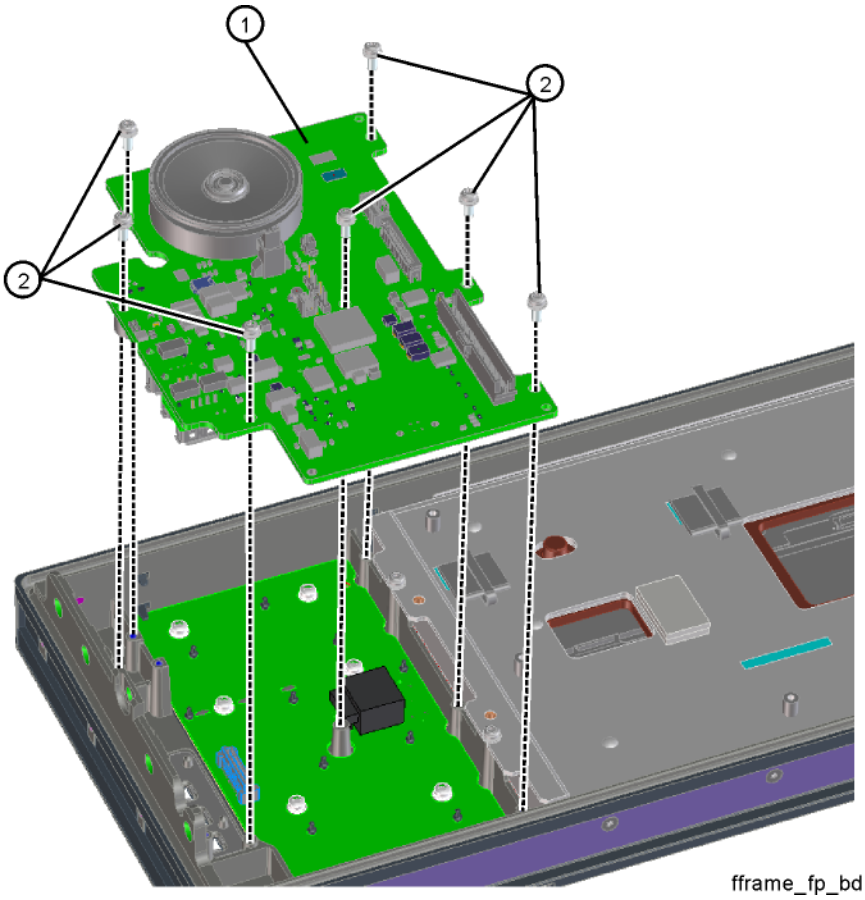

Display Assembly

Removal

1. Refer to Figure 18-13. Remove the four screws **(2)** (0515-0372) and the seven screws **(3)** (0515-1946). The display assembly **(1)** can now be lifted out of the front frame. When replacing the display assembly in the front frame, torque the screws to 9 inch-pounds.

Figure 18-13 Display Removal

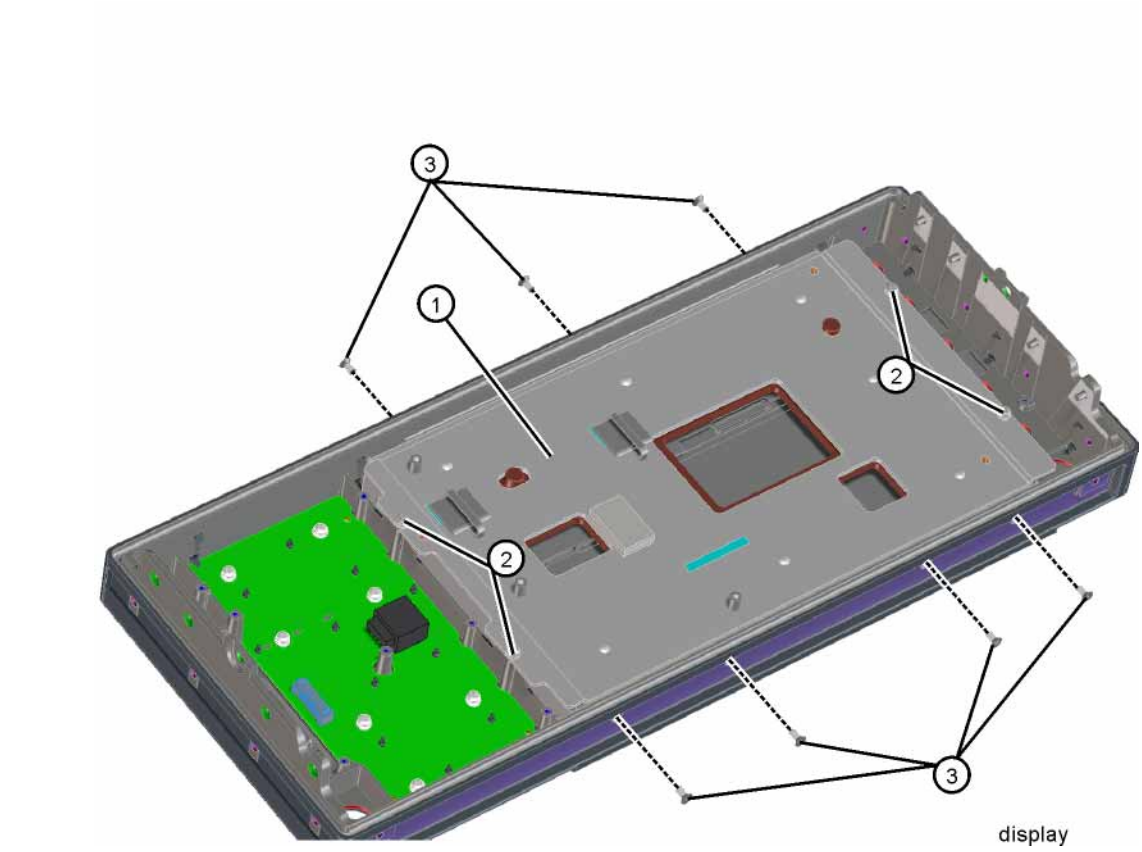

2. Refer to Figure 18-14. To separate the display and display holddown from the display bracket, remove the four screws **(1)** (0515-0365). When reassembling the display assembly, torque the screws to 2 inch-pounds.

Figure 18-14 Display and Bracket Separation

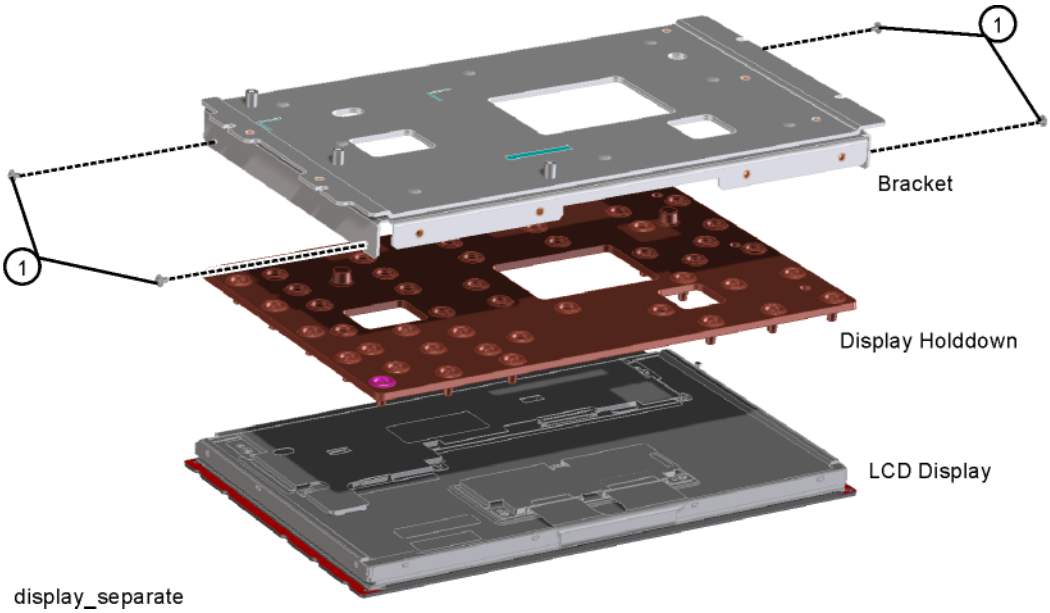

Keyboard/Keypad

1. Refer to Figure 18-15. Remove the RPG knob by carefully pulling it off the shaft. To remove the keyboard **(1)**, remove the eight screws **(2)** (0515-0430). When replacing the keyboard into the front frame, torque the screws to 9 inch-pounds. Replace the RPG knob by firmly pushing it onto the shaft.

Figure 18-15 Keyboard

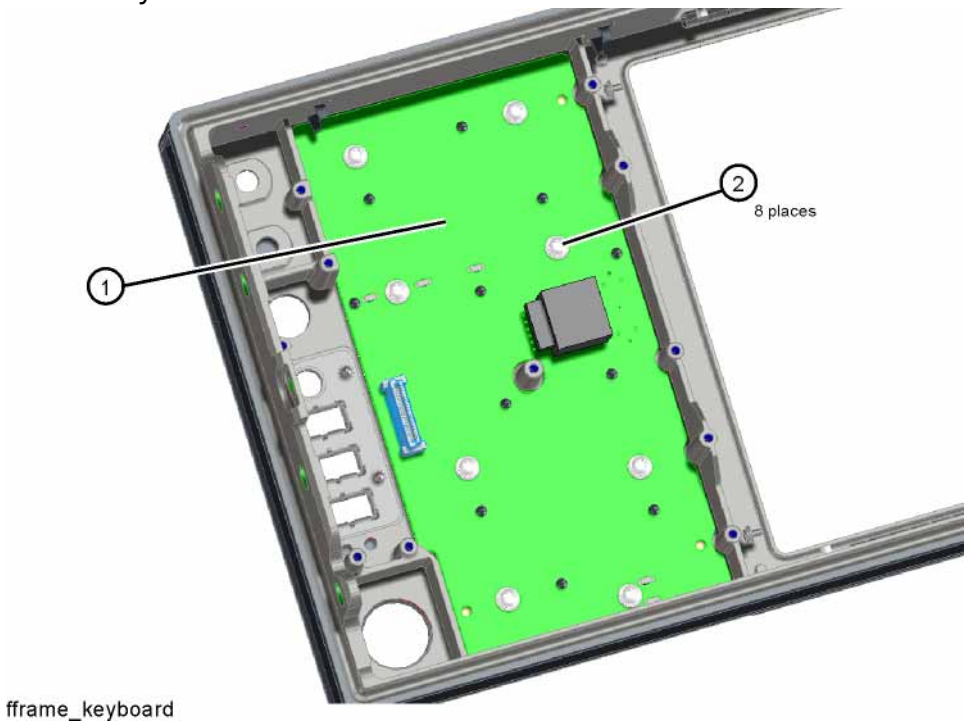

2. Refer to Figure 18-16. To separate the keypad from the keyboard pull the keypad away from the keyboard to release the multiple rubber tabs.

Figure 18-16 Keyboard Keypad Separation

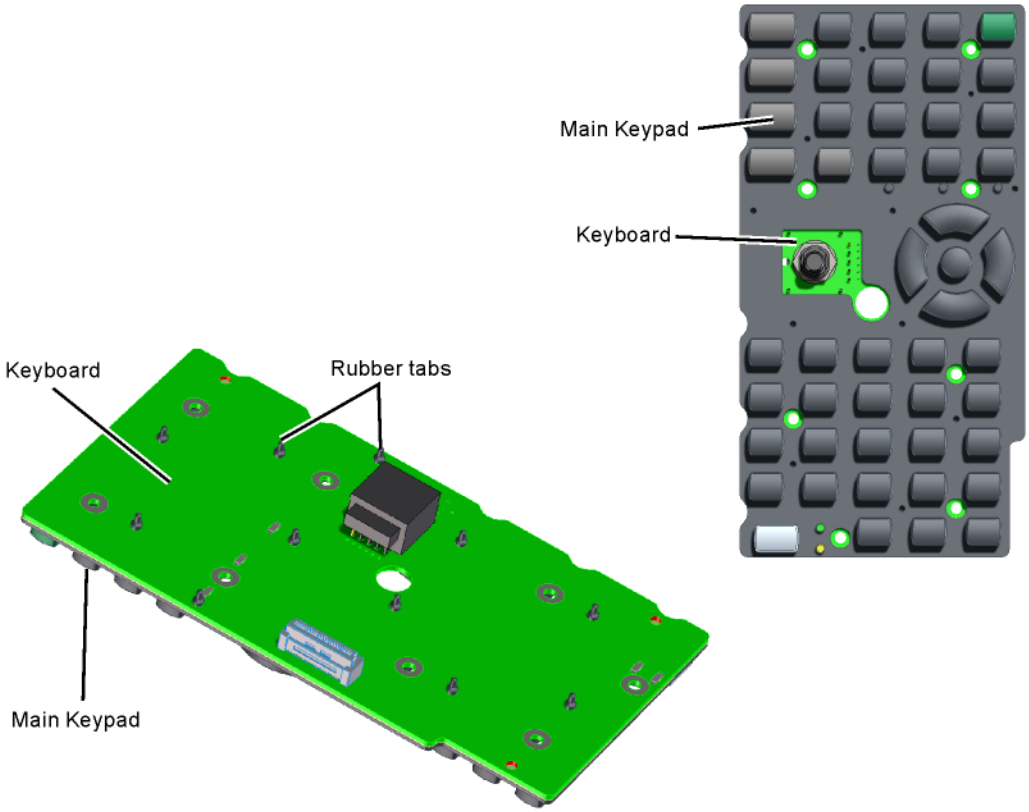

fframe_keyboard_separate

3. Remove the protective film from the new keypad (if replacing). Lay the keypad on the keyboard and pull up on the tabs from the back of the board to seat them in place.

RF Area (Options 503, 508, 513, 526)

Refer to Figure 18-17. The RF area consists of RF attenuator A **(1)**, RF attenuator B **(2)**, low band switch assembly **(3)**, YTF Preselector **(4)**, and YTO **(5)**. The RF area also includes the MPB and LNP switches if the options are present (refer to the "SW1/SW2 Microwave Preselector Bypass and SW3 Low Noise Path Switches (Options MPB and LNP)" section in this chapter).

Figure 18-17 RF Area Components and Cables (Options 503, 508, 513, 526)

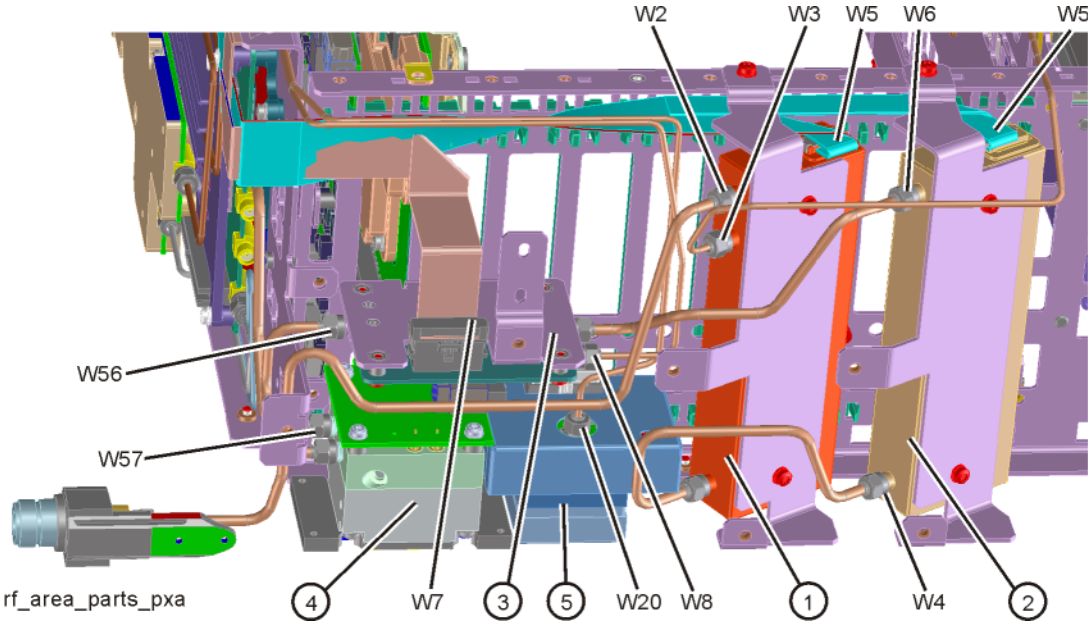

To gain access to the attenuators, low band switch, YTF Preselector, YTO, MPB switch, or LNP switch for removal, follow these steps:

1. Remove the instrument outer case. Refer to the Instrument Outer Case removal procedure.
2. Remove the front panel. Refer to the Front Frame Assembly removal procedure.

3. Refer to Figure 18-18. Remove the RF bracket **(1)** by removing the sixteen screws **(2)** (0515-0372) using the T-10 driver. If the instrument has Option RTS, Real Time Streaming, installed, there will be an additional screw **(3)** to be removed at the A28 Wideband Extension Board.

Figure 18-18 RF Bracket Removal

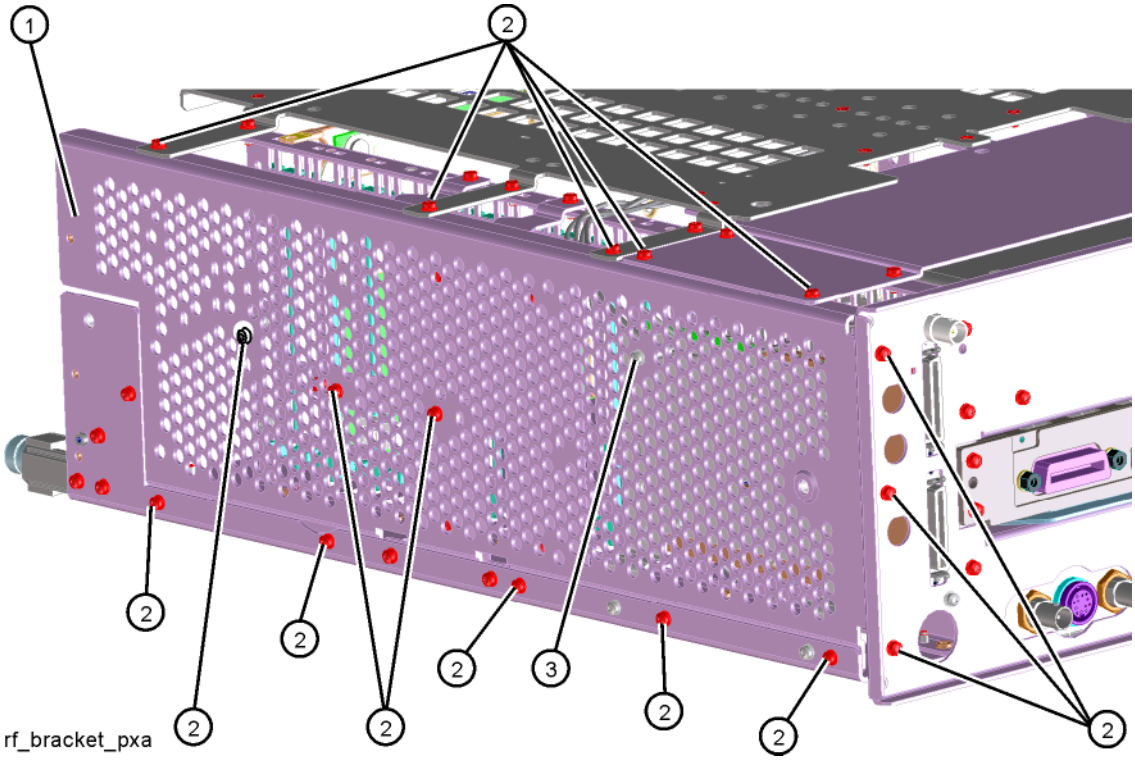

Attenuators

Removal

1. Refer to Figure 18-19. To remove Attenuator A **(1)** or Attenuator B **(2)**, remove the semi-rigid cables W2, W3, W4, or W6 attached to the attenuator using the 5/16 inch wrench.
2. Remove the ribbon cable attached to the attenuator.
3. Remove the two screws **(3)** or **(4)** (0515-0372) for each attenuator bracket to remove from the chassis using the T-10 driver.
4. Remove the attenuator from the bracket by removing the two screws (0515-0372).

Figure 18-19 Attenuators Removal

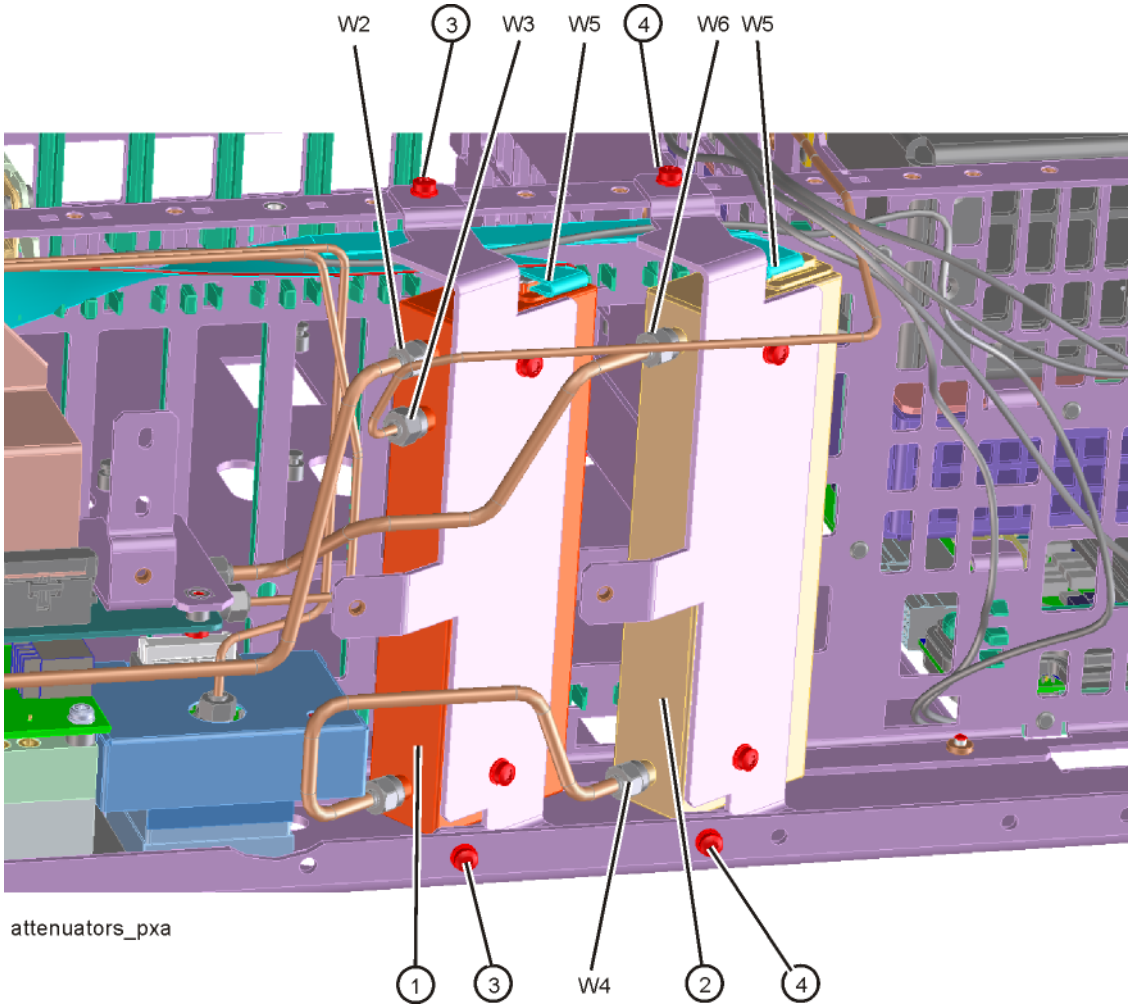

Replacement

1. Refer to Figure 18-19. Position the attenuator in the bracket so that the ribbon connector end is “up”.
2. Replace the two screws (0515-0372) that attach the attenuator to the bracket. Torque to 9 inch-pounds.
3. Position the attenuator and bracket into the chassis and attach with the two screws (0515-0372). Torque to 9 inch-pounds.
4. Replace the ribbon cable and semi-rigid cables W2, W3, W4, or W6 to the attenuator. Torque the semi-rigid cables to 10 inch-pounds.
5. Refer to Figure 18-18. Position the RF bracket onto the chassis and replace the sixteen screws (0515-0372). Torque to 9 inch-pounds.
6. Replace the front panel. Refer to the Front Frame Assembly replacement procedure.
7. Replace the instrument outer case. Refer to the Instrument Outer Case replacement procedure.

Table 18-5

Item	Keysight Part Number
W2	N9020-20100 (Option CNF)
	N9020-20139 (Option C35)
	N9020-20173 (Option 544, 550)
W3	N9020-20023 (Options 503, 508, 513, 526)
	N9020-20072 (Options 544, 550)
W4	N9020-20025 (Options 503, 508, 513, 526)
	N9020-20068 (Options 544, 550)
W6	N9020-20024 (Options 503, 508, 513, 526 without Option MPB or LNP)
	N9010-20004 (Options 544, 550 without Option MPB or LNP)

Low Band Switch

Removal

NOTE

If the analyzer has hardware for Options MPB and LNP installed, perform the removal procedure for "SW1/SW2 Microwave Preselector Bypass and SW3 Low Noise Path Switches (Options MPB and LNP)" first.

1. Refer to Figure 18-20. Remove the ribbon cable W7.
2. Remove the semi-rigid cables W6, W8, and W56 using the 5/16 inch wrench. W6 and W56 are only present on analyzers without Option MPB and/or LNP. If either of these options are present, the equivalent cables would be W52 (for W6) and W54 (for W56).
3. Refer to Figure 18-21. Remove the two screws **(2)** (0515-0372) using the T-10 driver. The low band switch **(1)** can now be removed from the chassis.
4. Refer to Figure 18-22. To separate the switch from the bracket, remove the four screws **(3)** (0515-0372) using the T-10 driver.

Figure 18-20 Low Band Switch Cable Removal

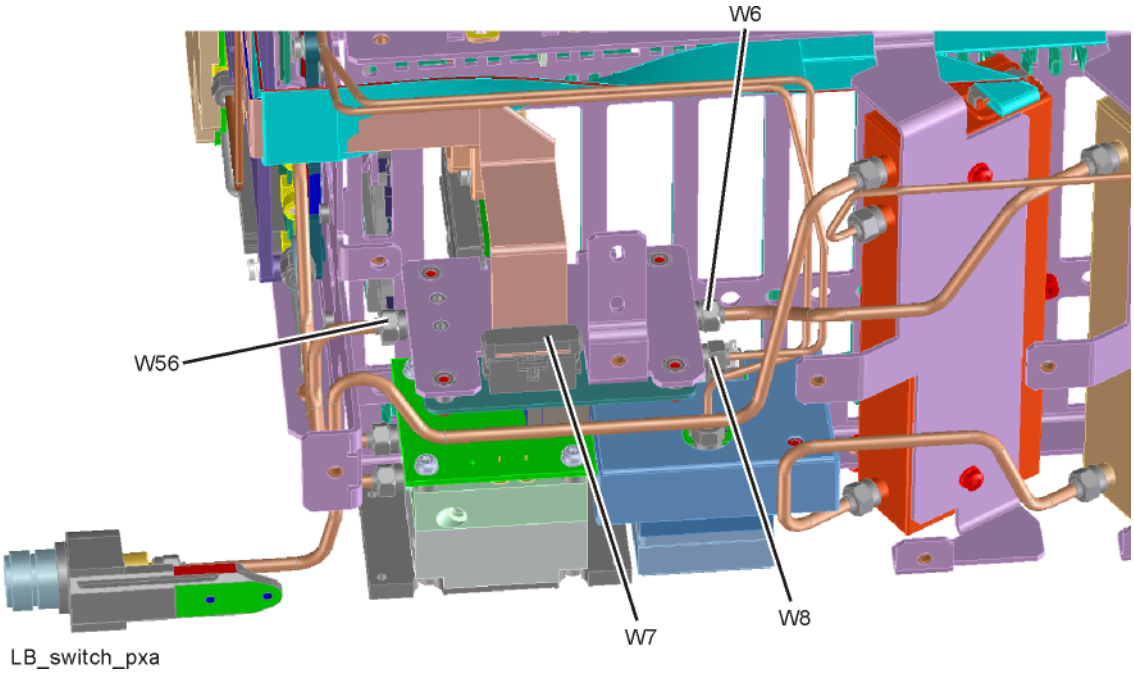

Figure 18-21 Low Band Switch Bracket Removal

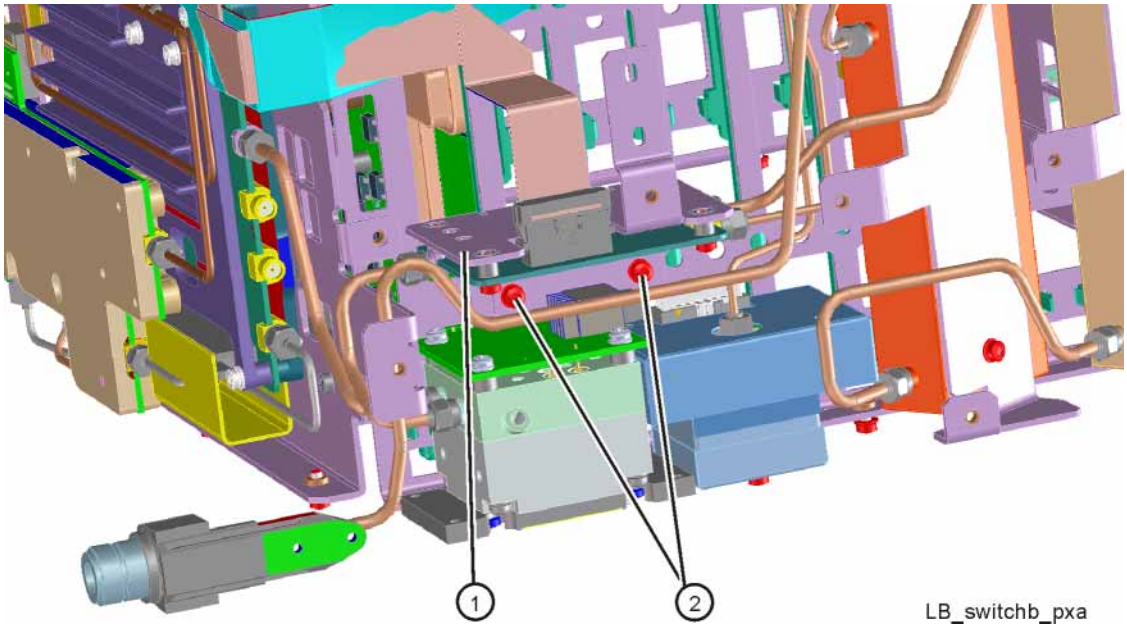

Figure 18-22 Low Band Switch and Bracket Separation

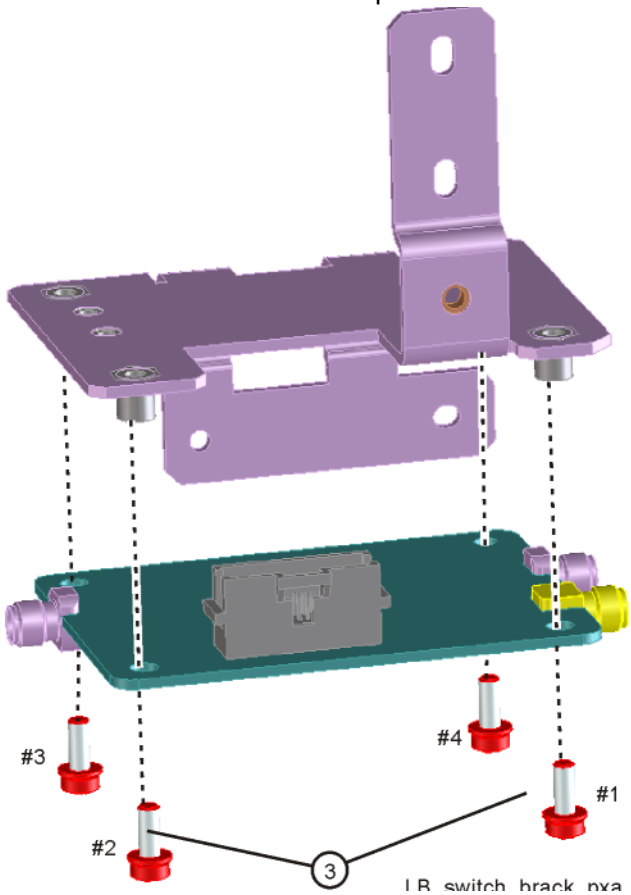

Replacement

1. Refer to Figure 18-22. Place the switch onto the bracket and replace the four screws **(3)** (0515-0372). Torque to 9 inch-pounds in the sequence shown, starting with #1.
2. Place the switch/bracket into place into the chassis and replace the two screws (0515-0372). Torque to 9 inch-pounds starting with the screw closest to the front of the instrument.
3. Refer to Figure 18-20. Replace the semi-rigid cables W6, W8, and W56. Torque to 10 inch-pounds.
4. Replace the ribbon cable W7. Ensure locking tabs on the sides of the connector are engaged.
5. Refer to Figure 18-18. Position the RF bracket onto the chassis and replace the sixteen screws (0515-0372). Torque to 9 inch-pounds.
6. Replace the front panel. Refer to the Front Frame Assembly replacement procedure.
7. Replace the instrument outer case. Refer to the Instrument Outer Case replacement procedure.

Table 18-6

Item	Keysight Part Number
W6	N9020-20024 (Options 503, 508, 513, 526 without Option MPB or LNP) N9010-20004 (Options 544, 550 without Option MPB or LNP)
W8	N9020-20101 (Options 503, 508, 513, 526 N9020-20101) N9020-20131 (Options 544, 550 N9020-20131)
W56	N9020-20123 (Options 503, 508, 513, 526 without Option MPB or LNP) N9010-20005 (Options 544, 550 without Option MPB or LNP)

YTF Preselector

Removal

1. Refer to Figure 18-23. Remove cables W2, W56 and W57 from the YTF Preselector **(1)**.
2. Remove the wire harness W11.
3. Refer to Figure 18-24. From the bottom of the instrument, remove the four screws **(1)** (0515-0372). The YTF Preselector can now be removed from the chassis (may require lifting up slightly on the low band switch).

Figure 18-23 YTF Preselector Removal

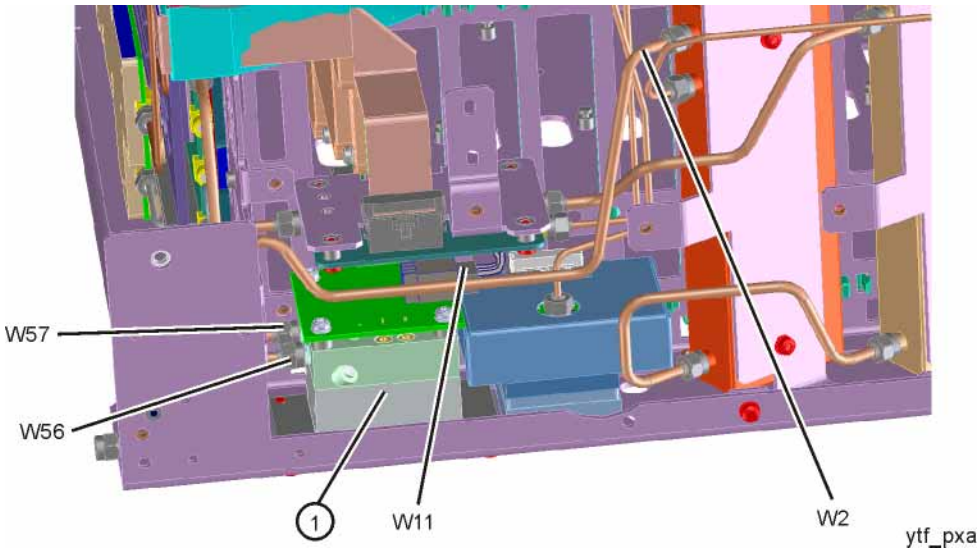

Figure 18-24 YTF Preselector Screws

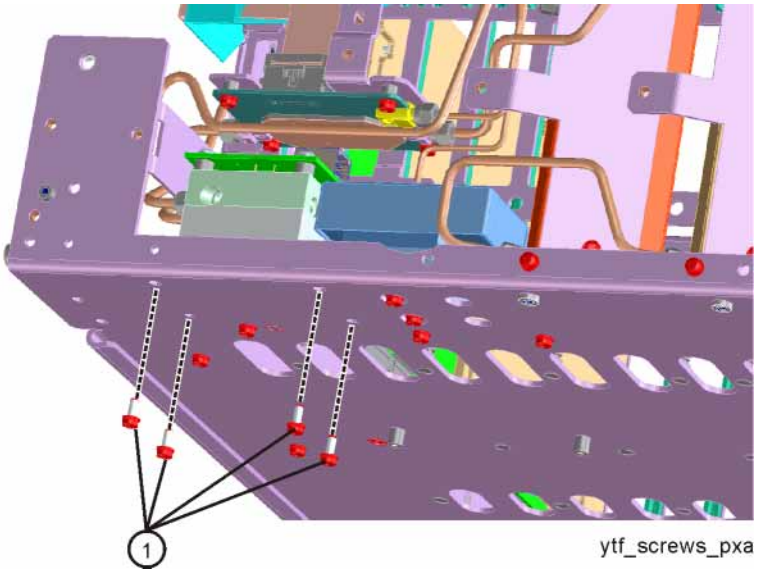

Replacement

1. Inspect the chassis where the YTF Preselector mounts and remove the gap pad if present (see Figure 18-25, item **(1)**). The gap pad may remain attached to the faulty YTF Preselector.
2. Refer to Figure 18-25. Install the replacement gap pad **(1)** (5022-7179) into the recess in the base of the replacement YTF Preselector **(2)** Refer to A12MP1 in Chapter 17, "Replaceable Parts.". Peel back one corner of the clear plastic backing on the pink side of the gap pad. Remove the blue backing from the other side of the gap pad. Install the gap pad as shown with the pink side exposed. Carefully peel off the clear plastic backing and smooth the gap pad into the recess.

Figure 18-25 Gap Pad Installation

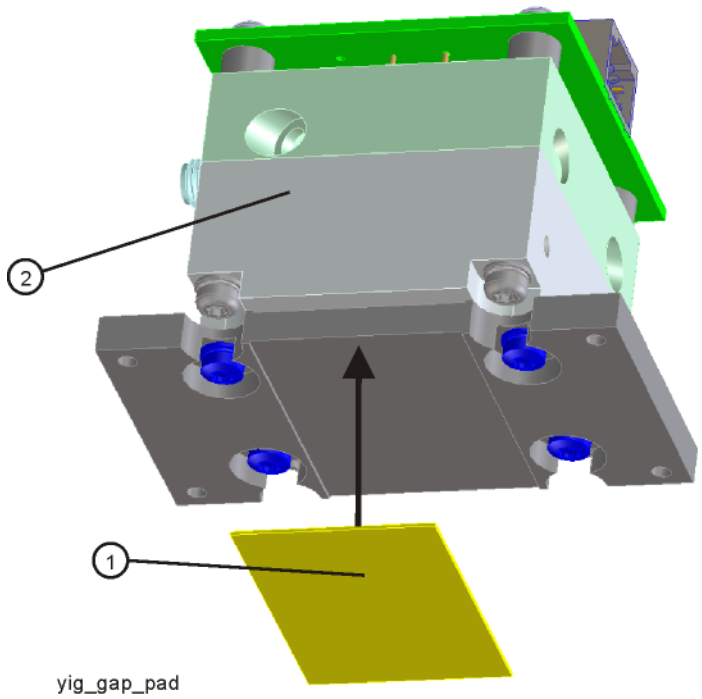

3. Refer to Figure 18-24. Place the YTF Preselector into the chassis with the ports toward the front of the instrument. Replace the four screws **(1)** (0515-0372). Torque to 9 inch-pounds.
4. Figure 18-23. Replace the cables W2, W56 and W57. Torque to 10 inch-pounds.
5. Replace the wire harness W11.
6. Refer to Figure 18-18. Position the RF bracket onto the chassis and replace the sixteen screws (0515-0372). Torque to 9 inch-pounds.
7. Replace the front panel. Refer to the Front Frame Assembly replacement procedure.

8. Replace the instrument outer case. Refer to the Instrument Outer Case replacement procedure.

Table 18-7

Item	Keysight Part Number
W2	N9020-20100 (Option CNF)
	N9020-20139 (Option C35)
	N9020-20173 (Option 544, 550)
W11	N9020-60059
W56	N9020-20123 (Options 503, 508, 513, 526 without Option MPB or LNP)
	N9010-20005 (Options 544, 550 without Option MPB or LNP)
W57	N9020-20124 (Options 503, 508, 513, 526 without Option MPB or LNP)
	N9010-20006 (Options 544, 550 without Option MPB or LNP)

YTO

Removal

1. Refer to Figure 18-26. Remove cable W20 from the YTO **(1)**.
2. Remove cable W4.
3. Remove the ribbon cable W23 by pulling forward on the locking latch.
4. Refer to Figure 18-27. From the bottom of the instrument, remove the two screws **(1)** (0515-0372). The YTO can now be removed from the chassis.

Figure 18-26 YTO Removal

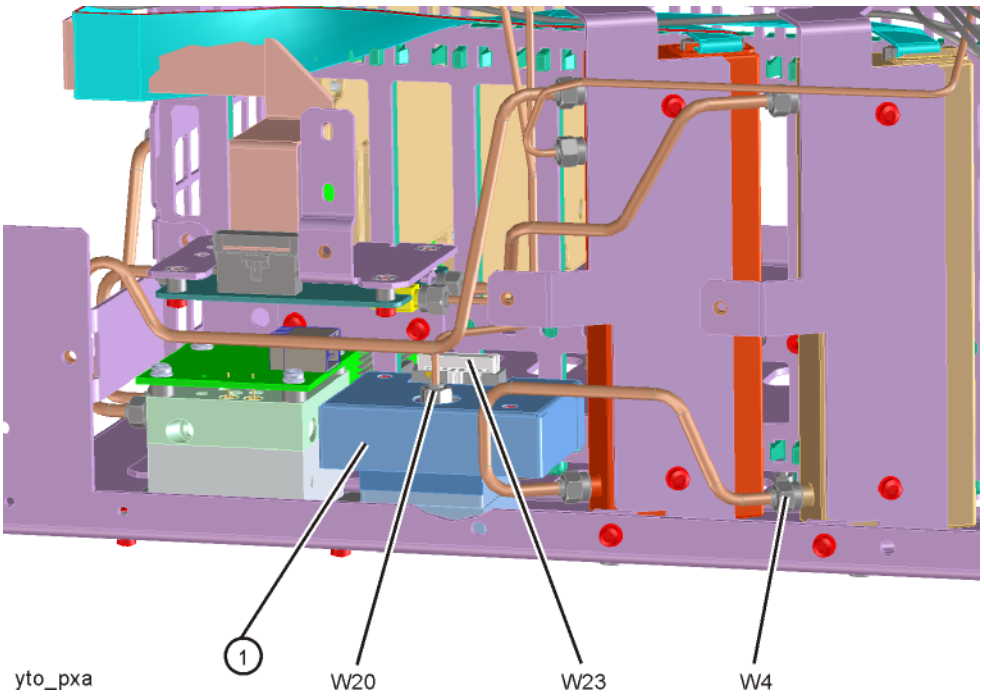

Figure 18-27 YTO Screws

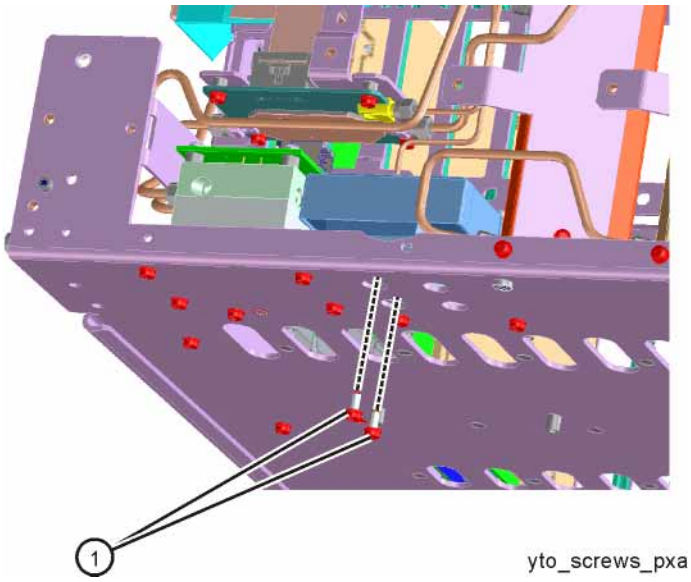

Replacement

1. Refer to Figure 18-27. Place the YTO into the chassis. Replace the two screws **(1)** (0515-0372). Torque to 9 inch-pounds.
2. Figure 18-26. Replace the cables W4 and W20. Torque to 10 inch-pounds.
3. Replace the ribbon cable W23. Ensure the locking latch is engaged.
4. Refer to Figure 18-18. Position the RF bracket onto the chassis and replace the sixteen screws (0515-0372). Torque to 9 inch-pounds.
5. Replace the front panel. Refer to the Front Frame Assembly replacement procedure.
6. Replace the instrument outer case. Refer to the Instrument Outer Case replacement procedure.

Table 18-8

Item	Keysight Part Number
W4	N9020-20025
W20	N9020-20018

SW1/SW2 Microwave Preselector Bypass and SW3 Low Noise Path Switches (Options MPB and LNP)

Removal

1. Refer to Figure 18-28. Remove rigid cable W51 (N9020-20143) from SW3 LNP (top) switch port 1 to Attenuator B output.

Figure 18-28 W51 Cable Removal

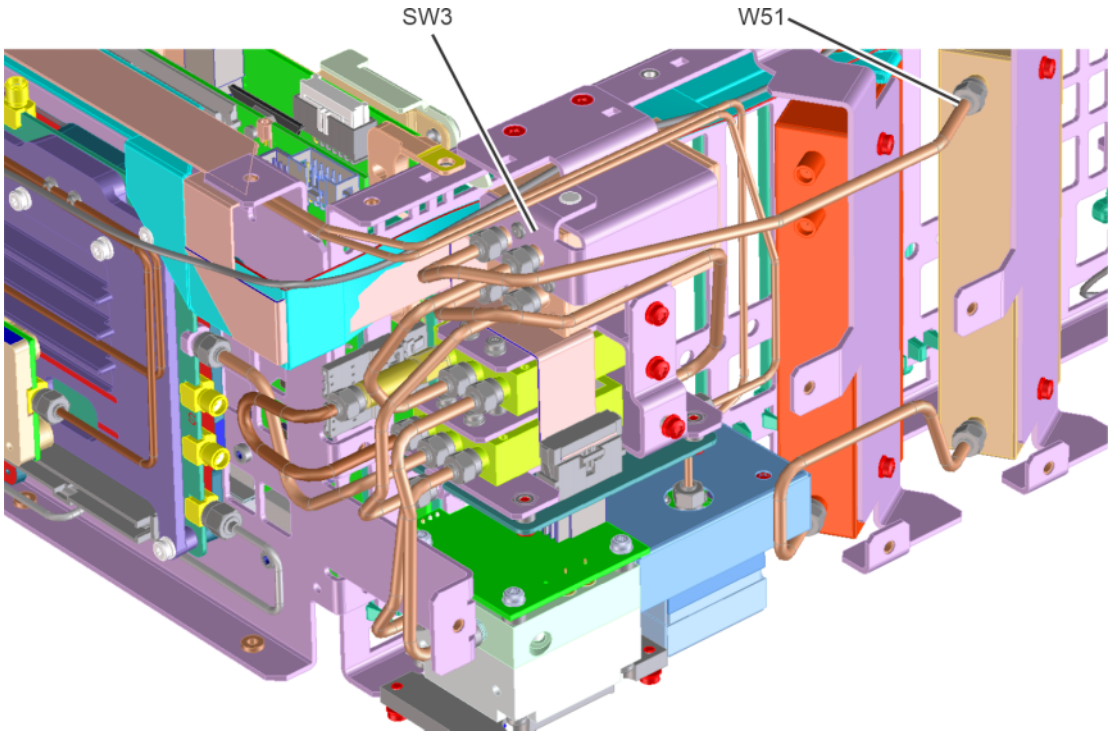

2. Refer to Figure 18-29. Remove cable W10 (E4410-20163) from SW2 MPB (middle) switch port 2 to YTF Assembly.
3. Remove cable W14 (E4410-20165) from SW1 MPB (bottom) switch port 2 to YTF Assembly.
4. Remove cable W54 (N9020-20145) from top switch port 3 to Low Band Switch Assembly.

Figure 18-29 W10, W14, and W54 Cables Removal

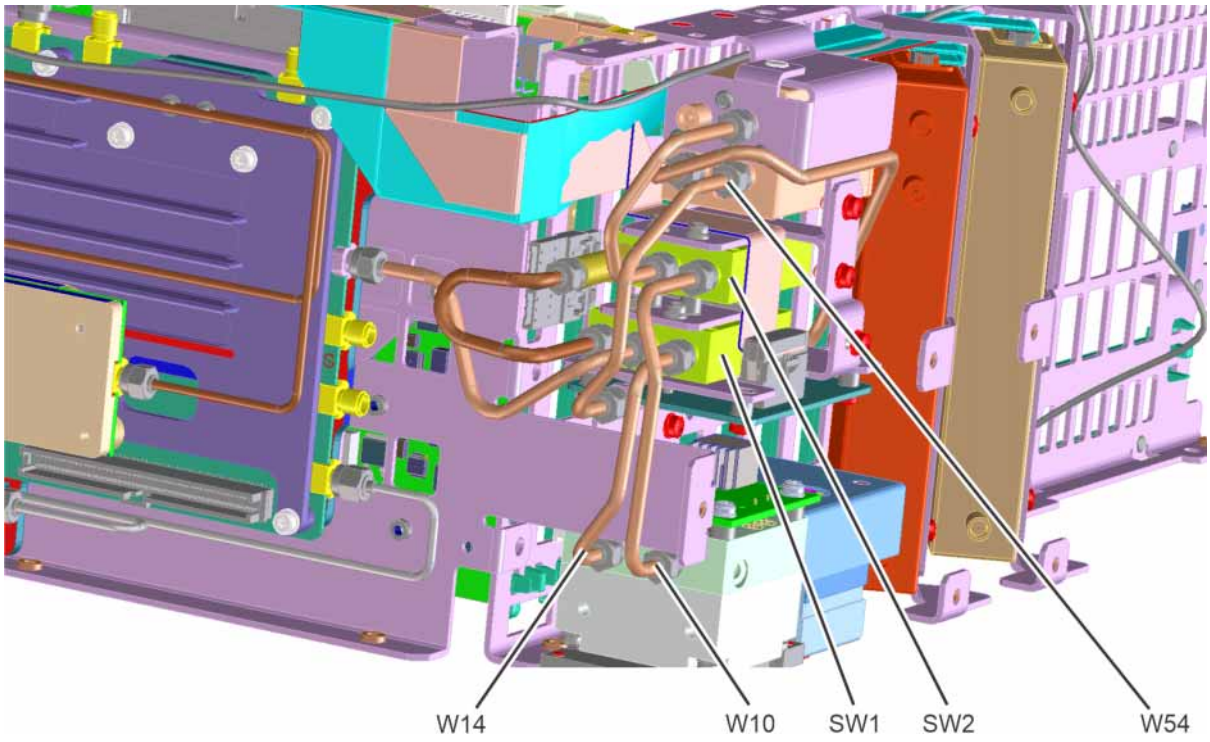

5. Refer to Figure 18-30. Remove cable W15 (E4410-20164) from bottom switch center port to Front End Assembly J9.
6. Remove cable W53 (N9020-20144) from top switch port 2 to center switch center port.
7. Remove cable W13 (N9020-20210) between attenuator (connected to center switch port 1 and bottom switch port 1.

Figure 18-30 W13, W15, and W53 Cables Removal

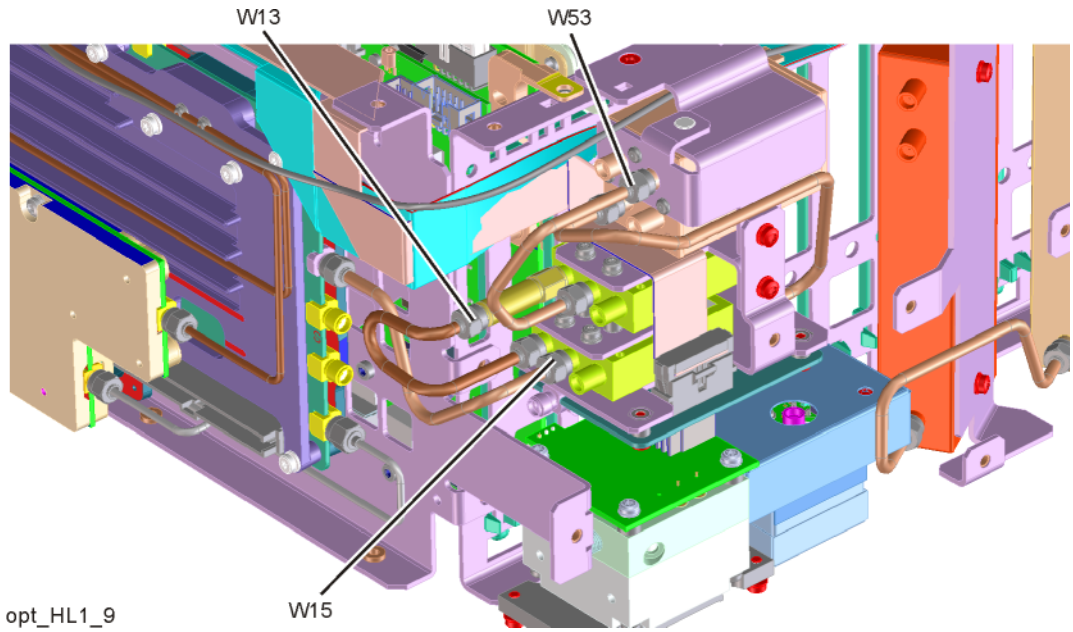

8. Refer to Figure 18-31. Remove cable W52 (N9020-20146) between top switch port 4 and Low Band Switch Assembly connector that is closest to the inner chassis.

Figure 18-31 W52 Cable Removal

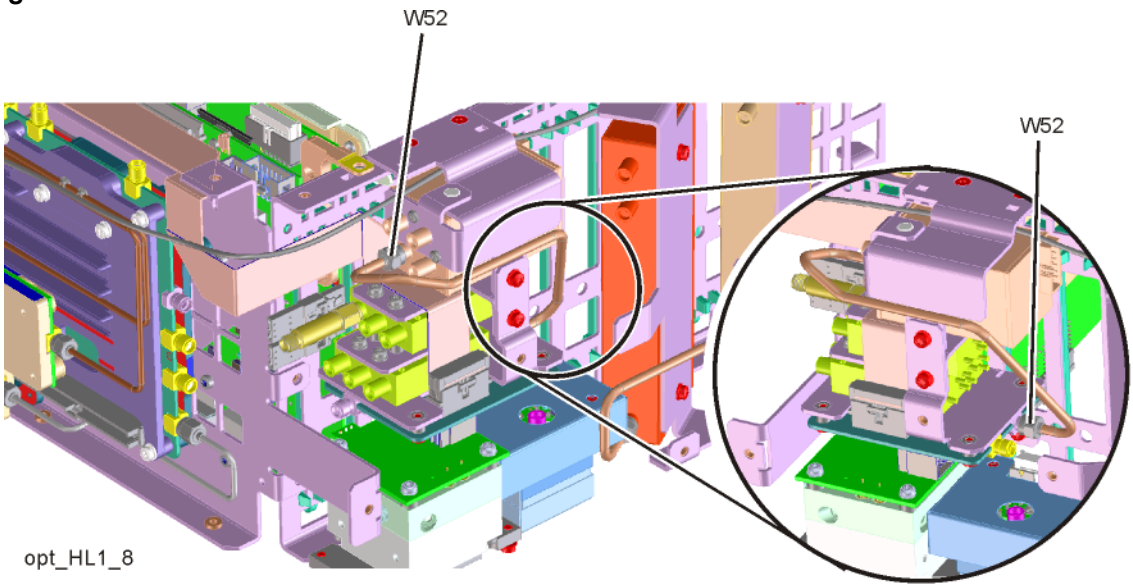

9. Refer to Figure 18-32. Remove the coaxial fixed attenuator **(1)**,

Figure 18-32 Attenuator Removal

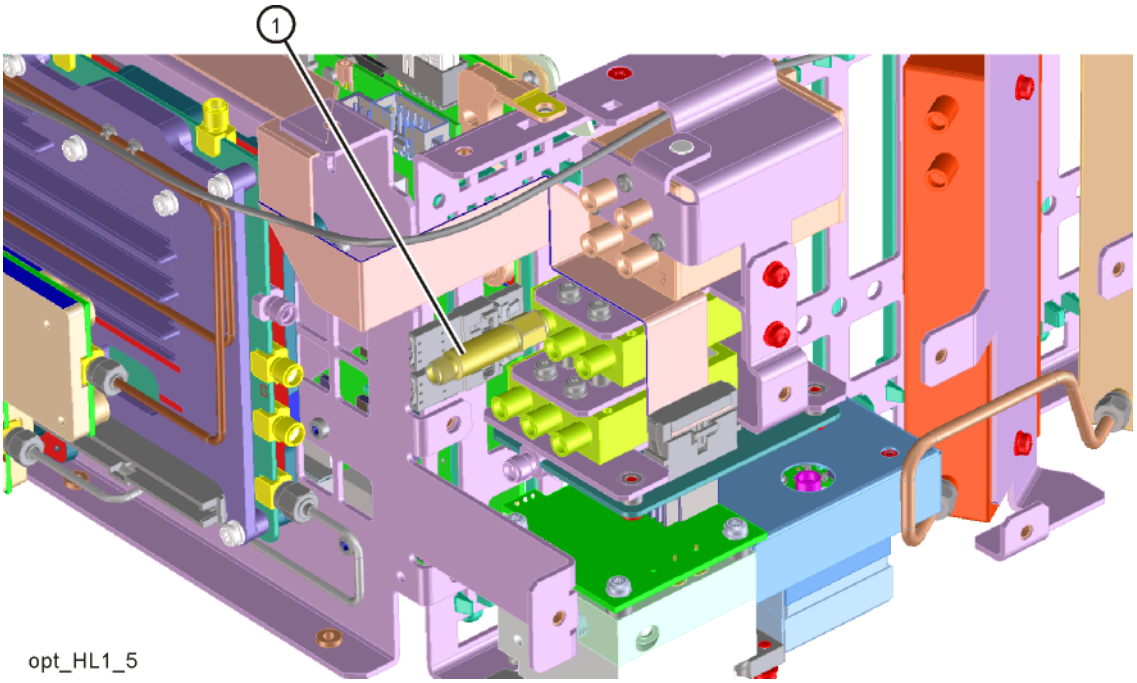

10. Refer to Figure 18-33. Disconnect the ribbon cable to the Front End Controller J802. Remove the LNP switch/bracket assembly **(1)** by removing the two screws (0515-2032) at the frame **(2)** and the single screw on the side **(3)** (0515-0372).

Figure 18-33 LNP Switch Assembly Removal

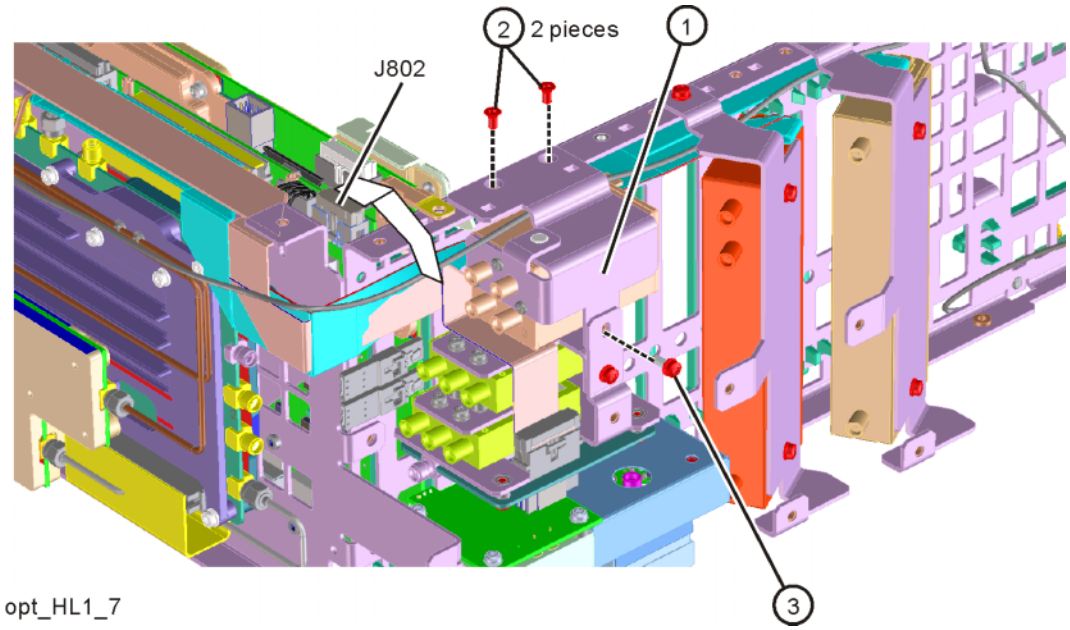

11. Refer to Figure 18-34. To separate the LNP switch **(2)** from the bracket **(1)** (N9020-00022), remove the three screws **(3)** (0515-1934).

Figure 18-34 Bracket Mount to LNP Switch

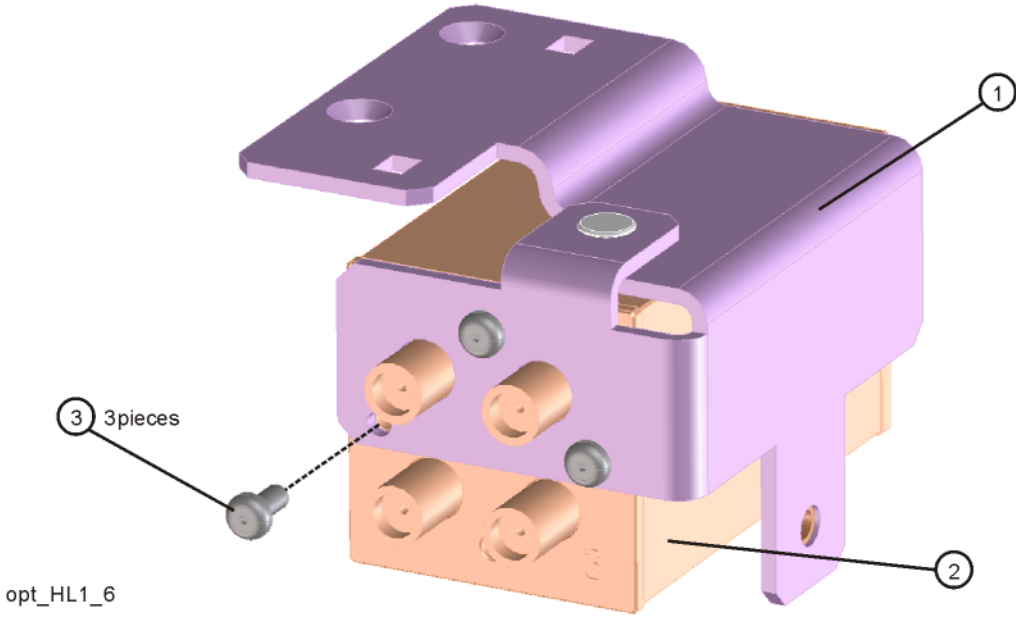

12. Refer to Figure 18-35. Disconnect W7 from the Low Band Switch.

Figure 18-35 W7 Removal

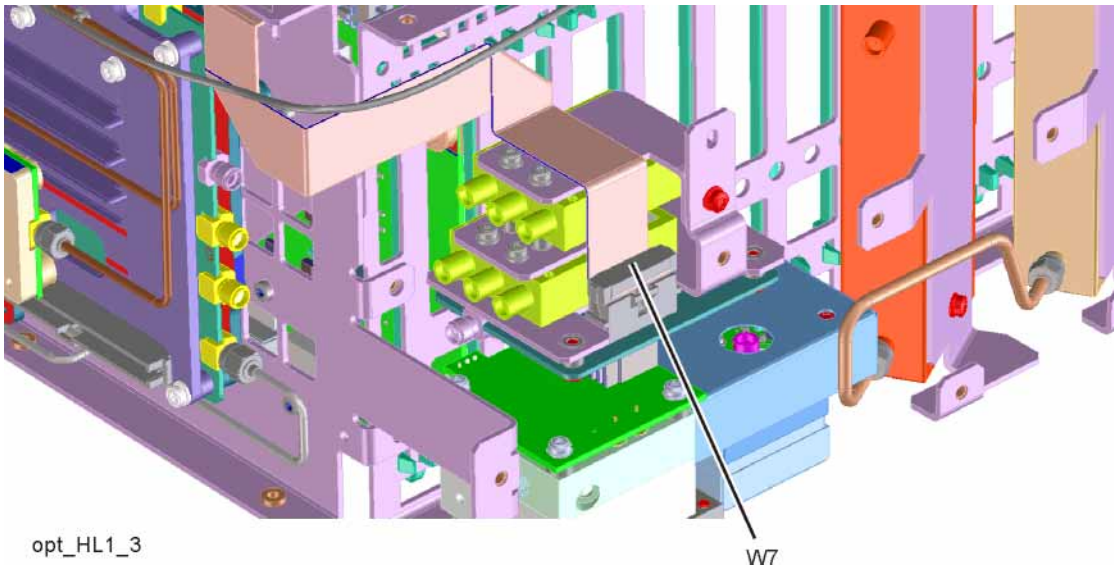

13. Refer to Figure 18-36. Disconnect the two wire harness connectors **(1)** located between the MPB switches and the frame.

Figure 18-36 Wire Harness Disconnect

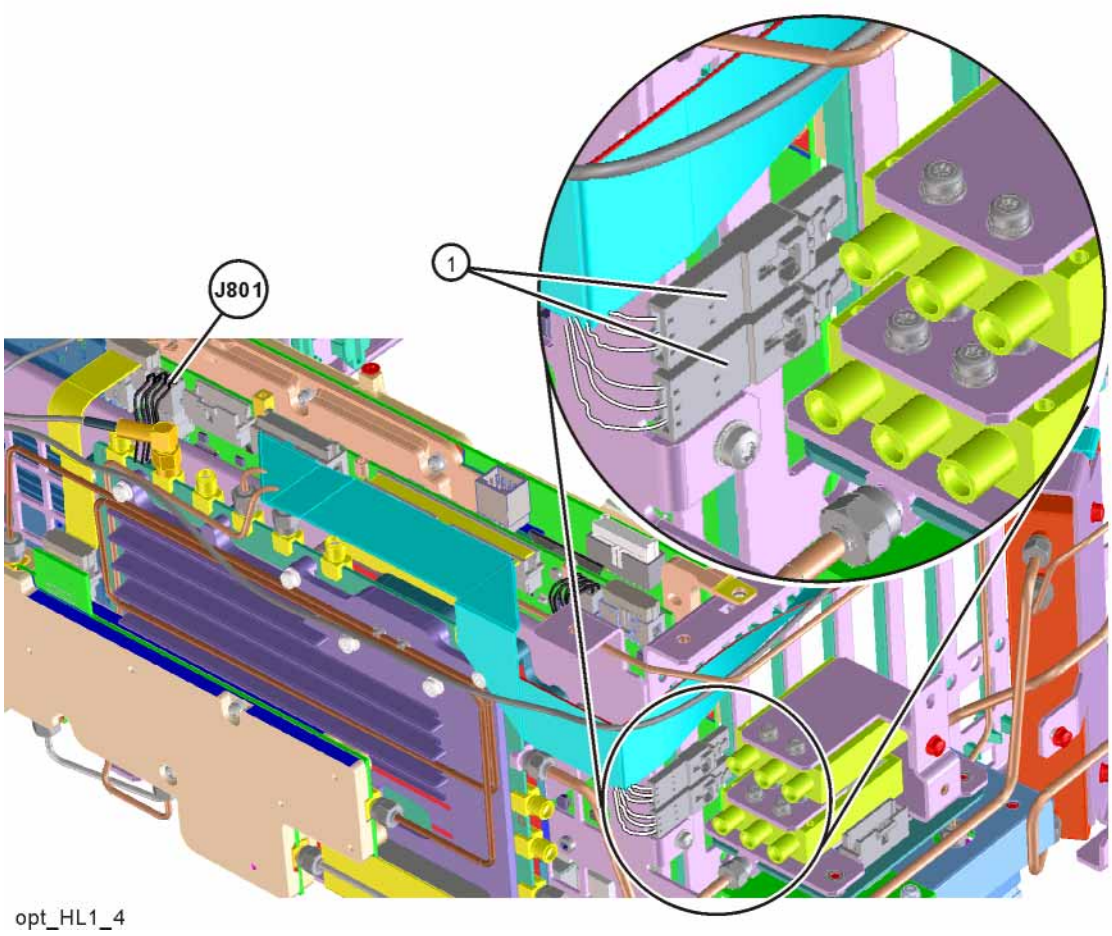

14. Refer to Figure 18-37. Remove the top MPB switch/bracket assembly **(1)/(2)** by removing the single screw on the side **(4)** (0515-0372). To separate the switch from the bracket, remove the two top screws **(3)** (0515-0372).

Figure 18-37 MPB Switch 2 Removal

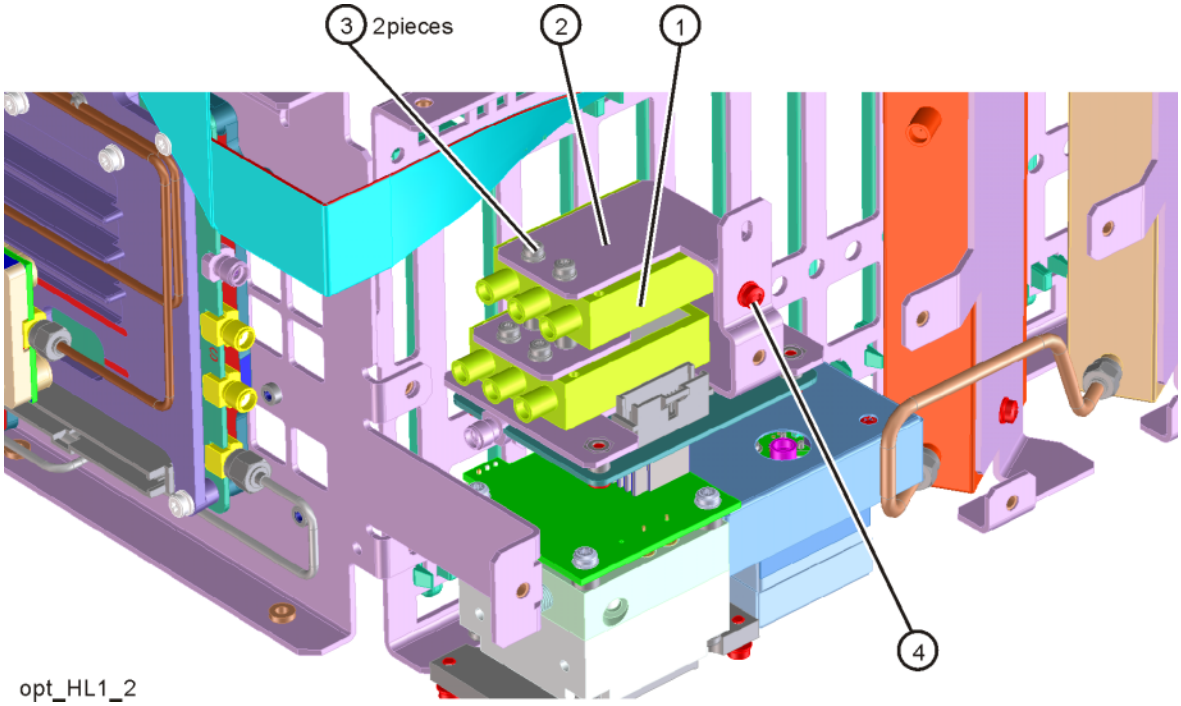

15. Refer to Figure 18-38. Remove the bottom MPB switch/bracket assembly **(1)/(2)** by removing the two screws on the top **(3)** (0515-1992).

Figure 18-38 MPB Switch 1 Removal

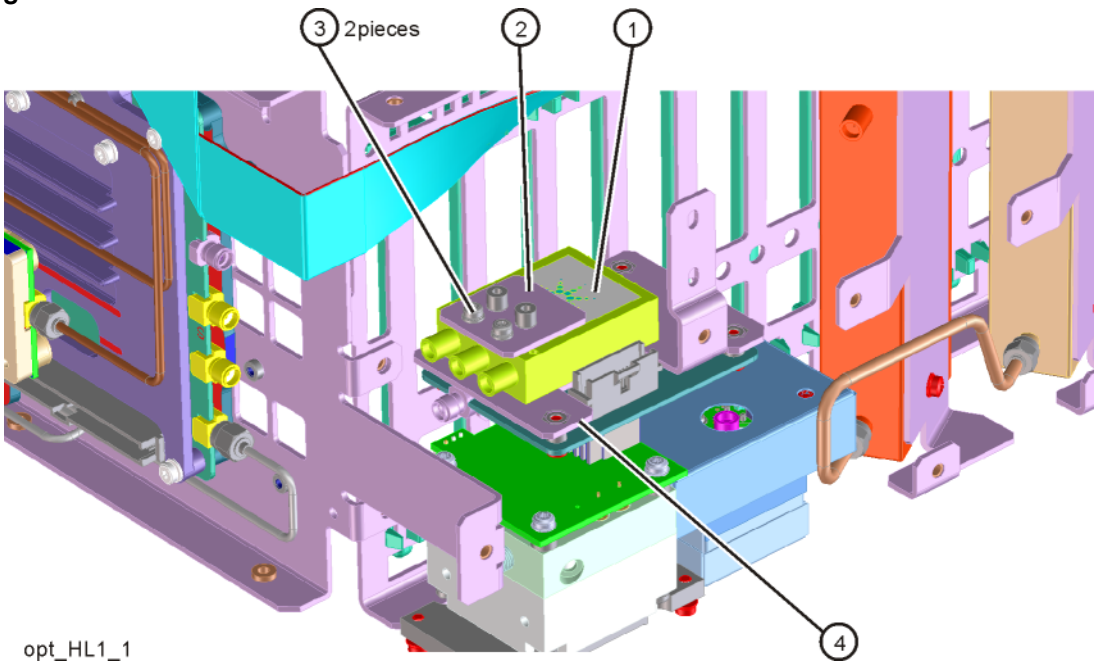

Replacement

1. Refer to Figure 18-39. Place the first MPB switch/bracket assembly **(1)/(2)** on the Low Band bracket **(4)** with the label facing up. Use the two screws **(3)** (0515-1992) to attach to the Low Band bracket. Do not torque screws at this time.

Figure 18-39 MPB Switch 1 Placement

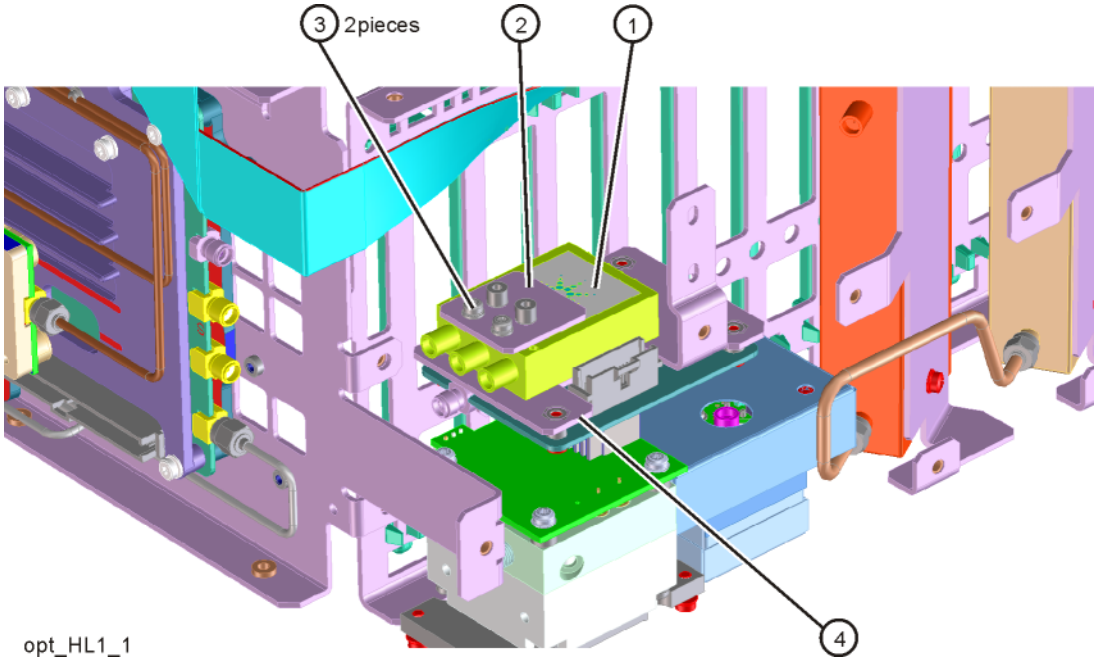

2. Refer to Figure 18-40. Place the second MPB switch/bracket assembly **(1)/(2)** on the bracket previously installed. Assure label on switch is facing up. To attach use the two screws **(3)** (0515-1992).

Figure 18-40 MPB Switch 2 Placement

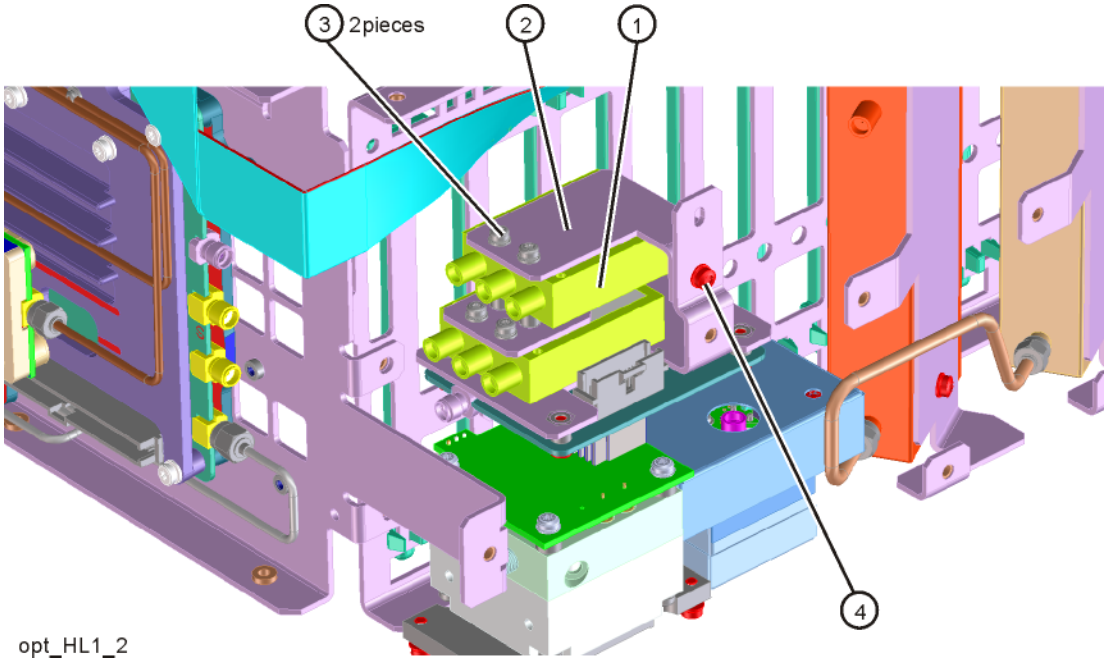

3. Secure the bracket to the Low Band Switch bracket with the single screw **(4)** (0515-0372). Do not torque.
4. Align switches so they are parallel with side of instrument then torque the four screws **(3)** securing the switches to the brackets to 6 in lbs. Torque the screw **(4)** that secures the switch brackets together to 9 inch-lbs.

5. Refer to Figure 18-41. Route W7 over bracket and switch as shown and insert W7 connector into Low Band Switch header. Ensure the locking tabs are engaged on both sides of the connector.

Figure 18-41 W7 Routing

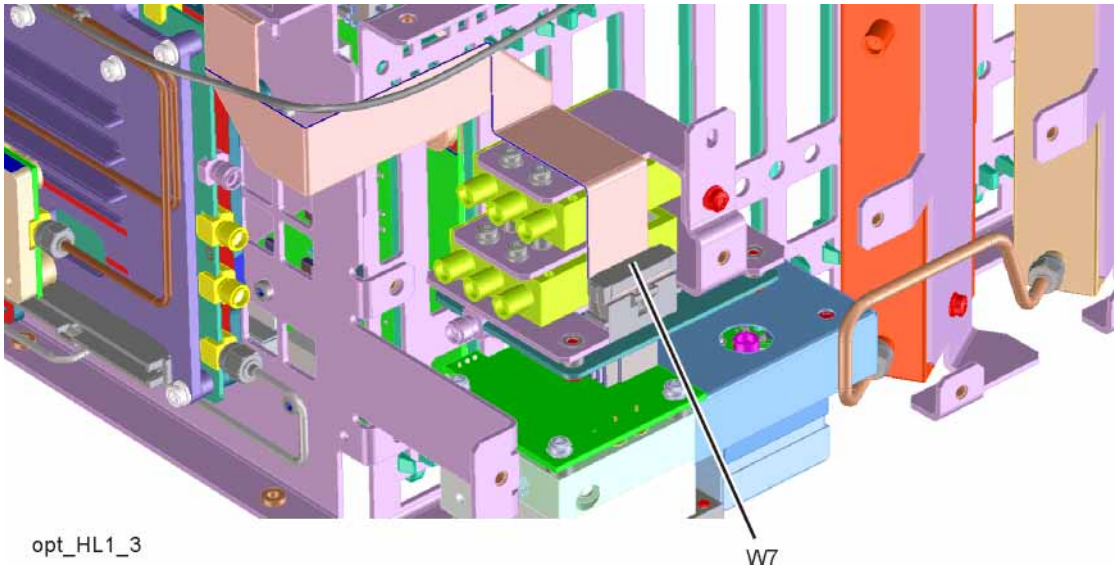

6. Refer to Figure 18-42. Reconnect the two wire harness connectors **(1)**. Once connected, position the connections alongside the switches.

Figure 18-42 Wire Harness Routing

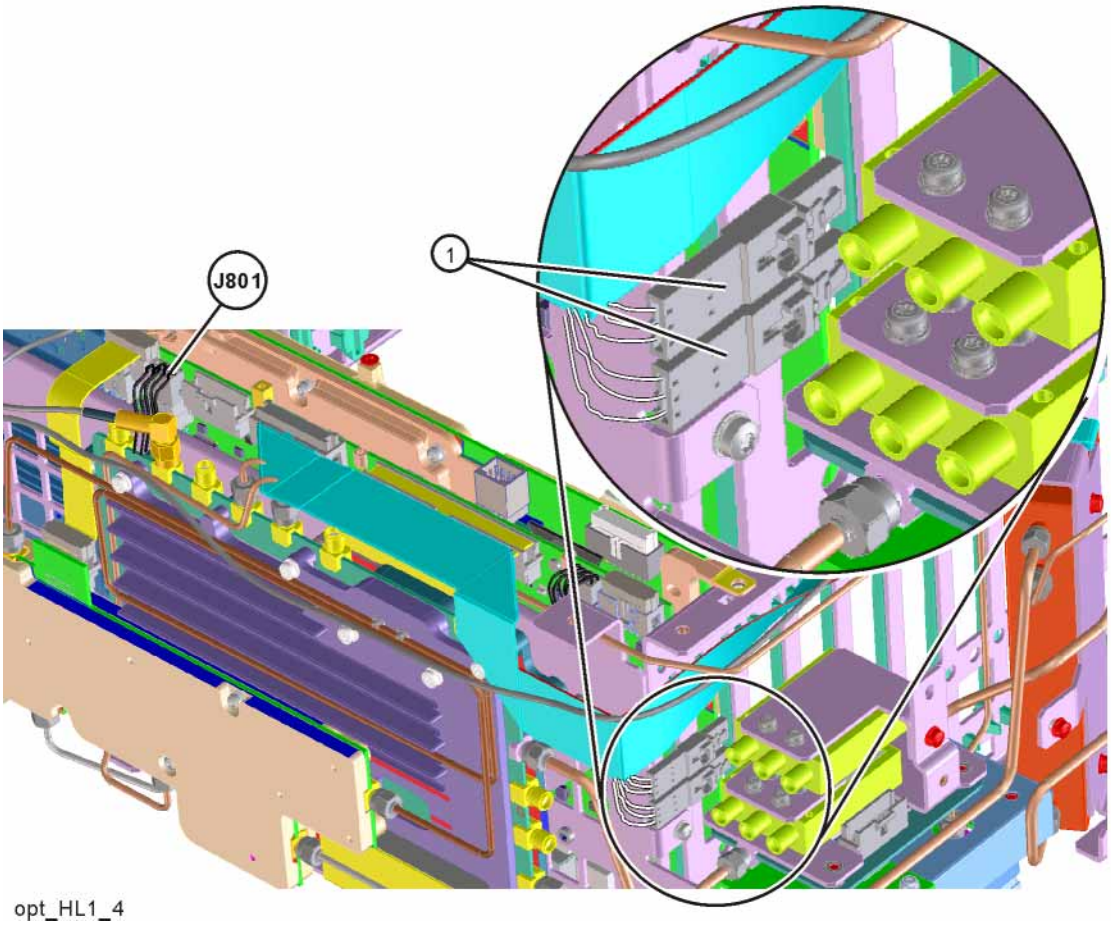

7. Refer to Figure 18-43. Attach the coaxial fixed attenuator **(1)** to top MPB switch port 1. Torque to 10 inch-lbs.

Figure 18-43 Attenuator Installation

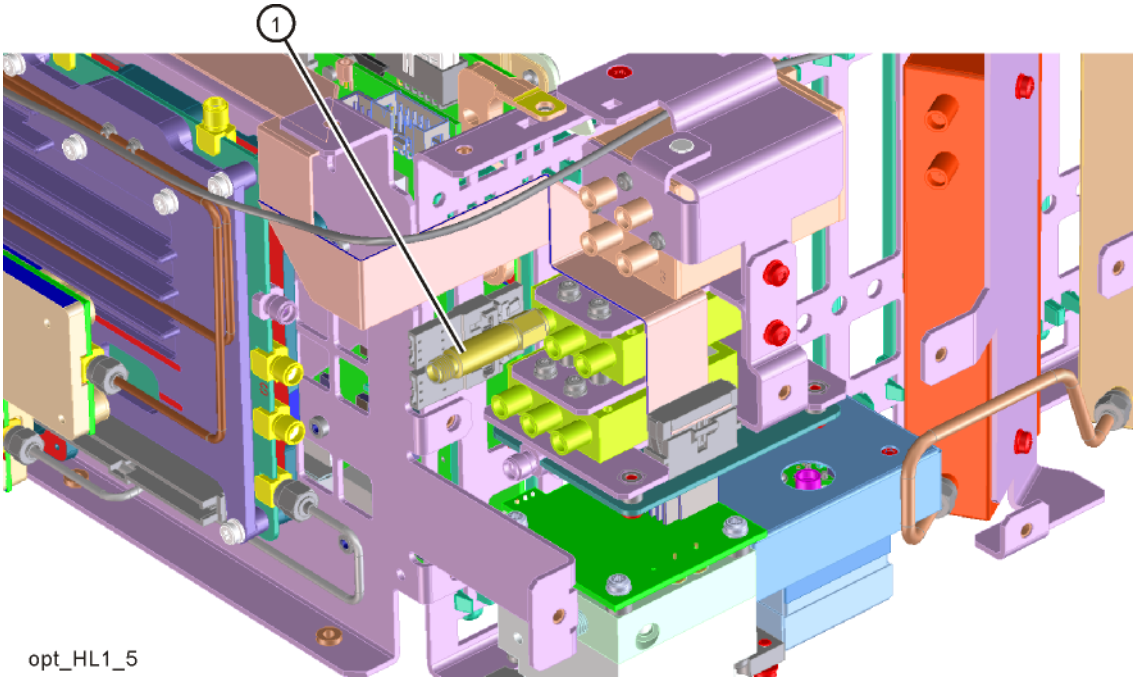

8. Refer to Figure 18-44. Install the bracket **(1)** to the LNP switch **(2)** using three screws **(3)** (0515-1934). Assure the number 3 on the switch is positioned as shown. Torque screws to 6 inch-lbs. Install the ribbon cable **(4)** into the switch connector header.

Figure 18-44 Bracket Mount to LNP Switch

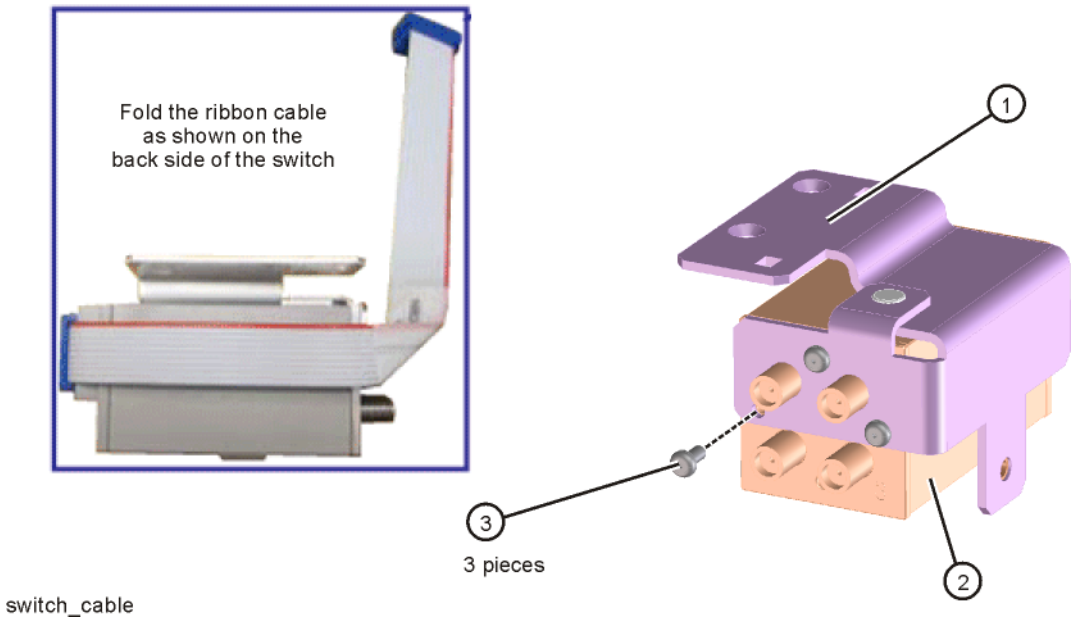

9. Refer to Figure 18-45. Install the LNP switch/bracket assembly **(1)**. Route the switch control cable between the switch and the chassis. The cable routes over the LO Synthesizer board ear then plugs into J802. If this is not routed correctly the cable can be damaged when the top brace is installed. Refer to Figure 18-46 and Figure 18-47 for cable routing pictures. Connect the ribbon cable to the Front End Controller J802 as shown. Secure switch bracket to chassis frame with the two top screws **(2)** (0515-2032). Secure switch bracket to the other switch bracket with the single side screw **(3)** (0515-0372). Torque screws to 9 inch-lbs.

Figure 18-45 LNP Switch Assembly Installation

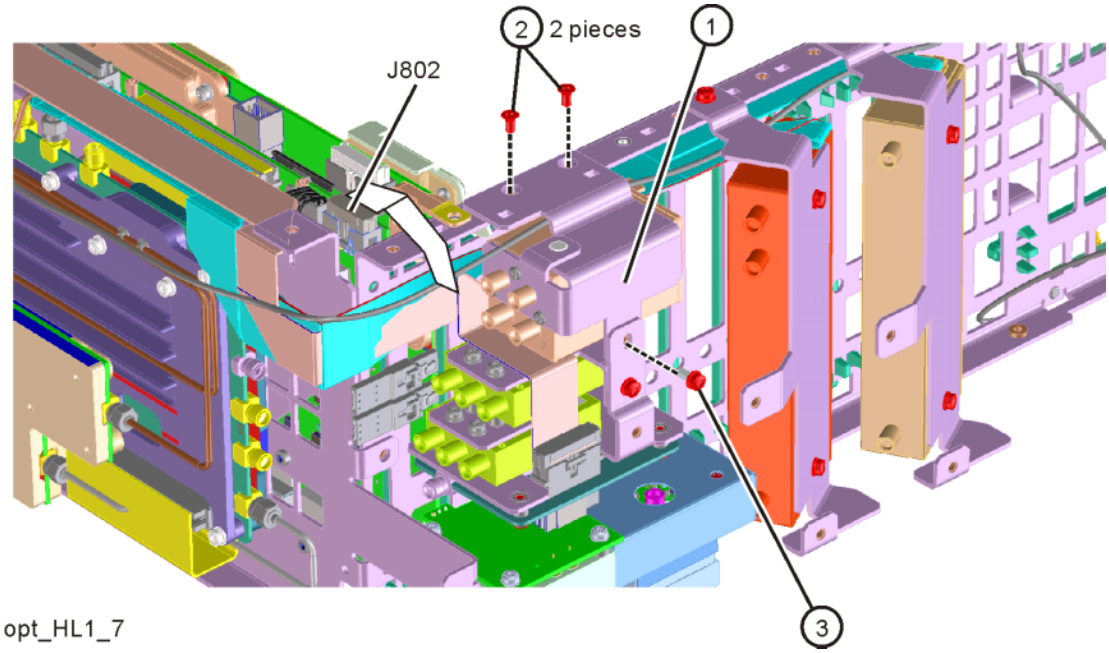

Figure 18-46 Cable Routing

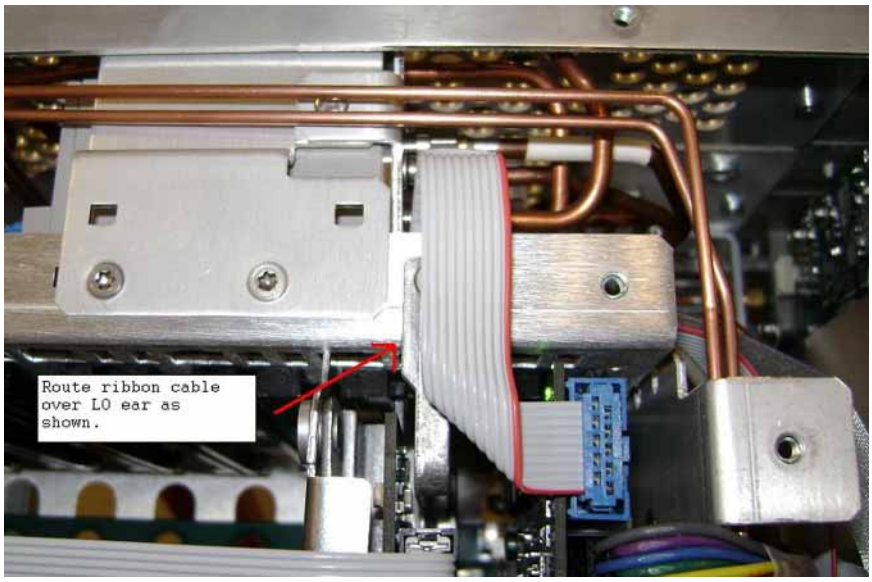

Figure 18-47 Cable Routing

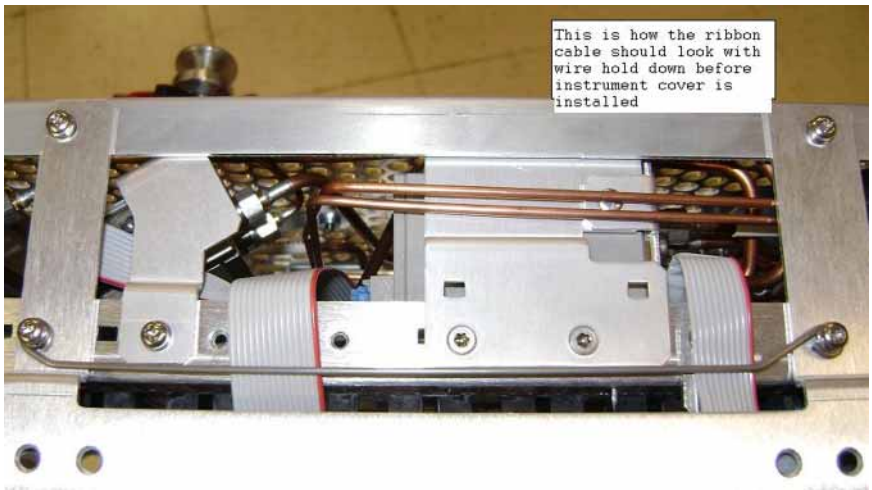

10. Refer to Figure 18-48. Install rigid cable W52 () between top switch port 4 and Low Band Switch Assembly connector that is closest to the inner chassis. Torque to 10 inch-lbs.

Figure 18-48 W52 Installation

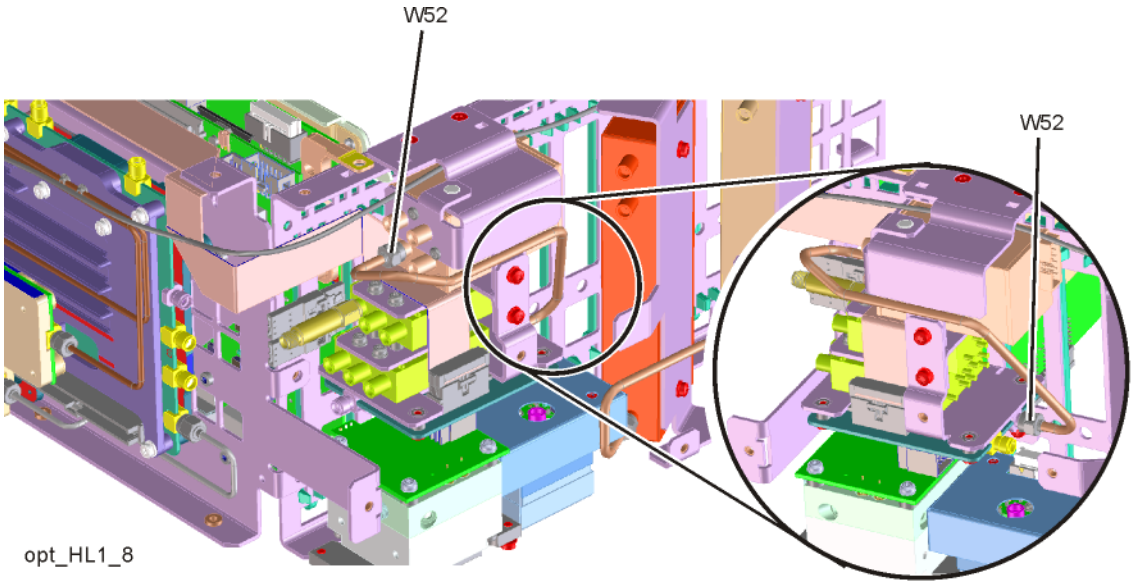

Table 18-9

Item	Keysight Part Number
W52	N9020-20146 (Options 503, 508, 513, 526 with Option LNP or MPB)
	N9020-20125 (Options 544, 550 with Option LNP or MPB)

11. Refer to Figure 18-49. Install rigid cable W13 (N9020-20210) **(1)** between attenuator (connected to center switch port 1 and bottom switch port 1. Torque to 10 inch-lbs.

Figure 18-49 W13, W15, W53 Installation

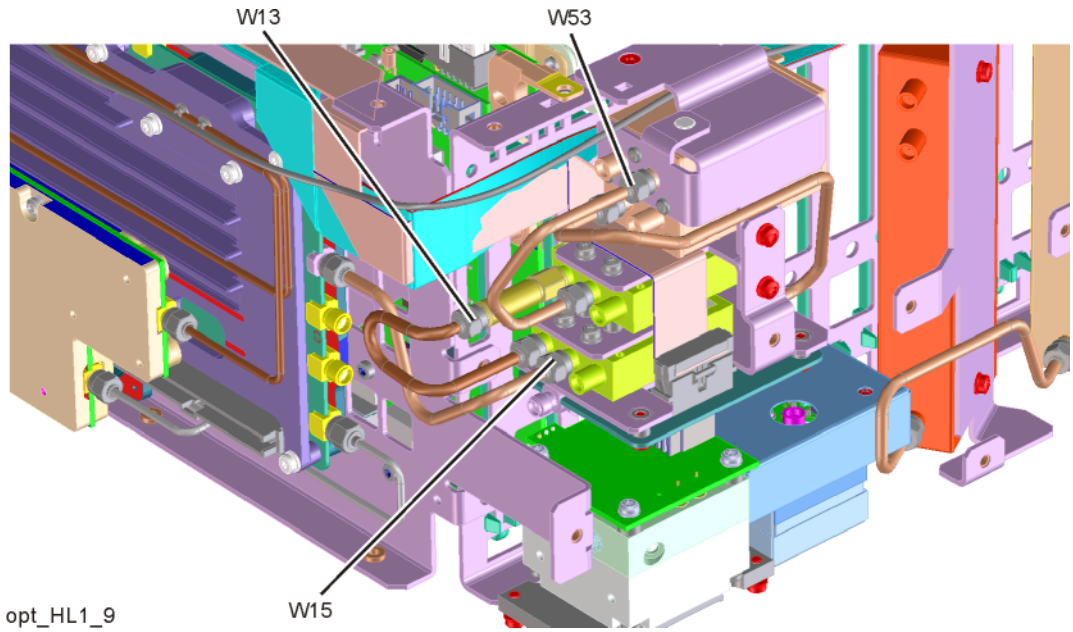

Table 18-10

Item	Keysight Part Number
W13	N9020-20210
W15	E4410-20164
W53	N9020-20144

12. Install rigid cable W53 **(2)** from top switch port 2 to center switch center port. Torque to 10 inch-lbs.

13. Install rigid cable W15 **(3)** from bottom switch center port to Front End Assembly J9. Torque to 10 inch-lbs.

14. Refer to Figure 18-50. Install rigid cable W54 **(1)** from top switch port 3 to Low Band Switch Assembly as shown. Torque to 10 inch-lbs.

Figure 18-50 W10, W14, W54 Installation

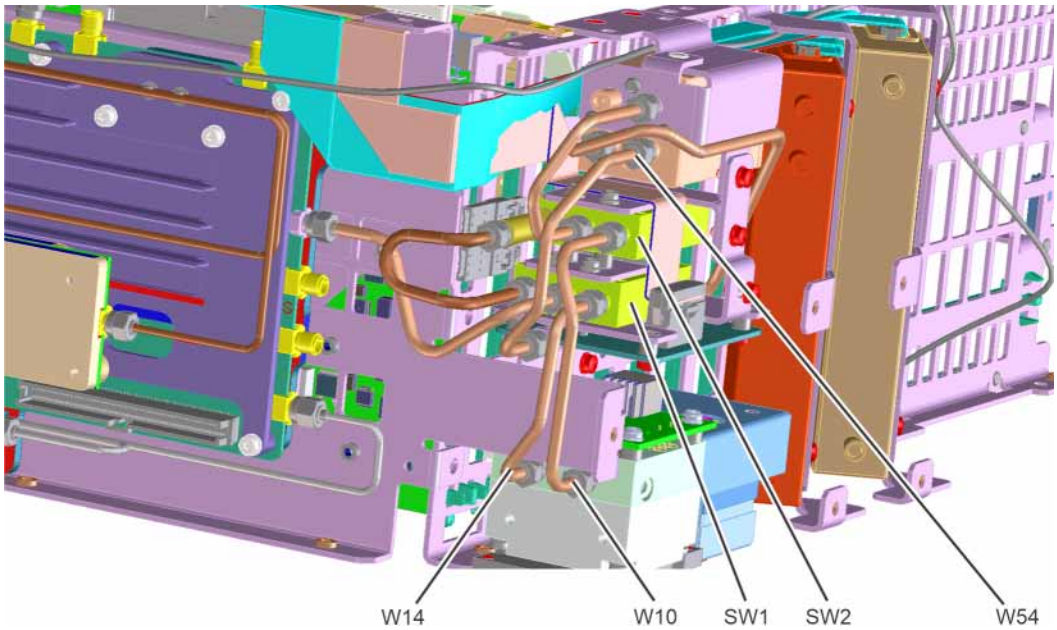

Table 18-11

Item	Keysight Part Number
W10	E4410-20163
W14	E4410-20165
W54	N9020-20145 (Options 503, 508, 513, 526 with Option LNP or MPB) N9020-20127 (Options 544, 550 with Option LNP or MPB)

15. Install rigid cable W14 (E4410-20165) **(2)** from bottom switch port 2 to YTF Assembly as shown. Torque to 10 inch-lbs.

16. Install rigid cable W10 (E4410-20163) **(3)** from middle switch port 2 to YTF Assembly as shown. Torque to 10 inch-lbs.

17. Refer to Figure 18-51. Install rigid cable W51 () **(1)** from top switch port 1 to Attenuator B output as shown. Torque to 10 inch-lbs.

Figure 18-51 W51 Installation

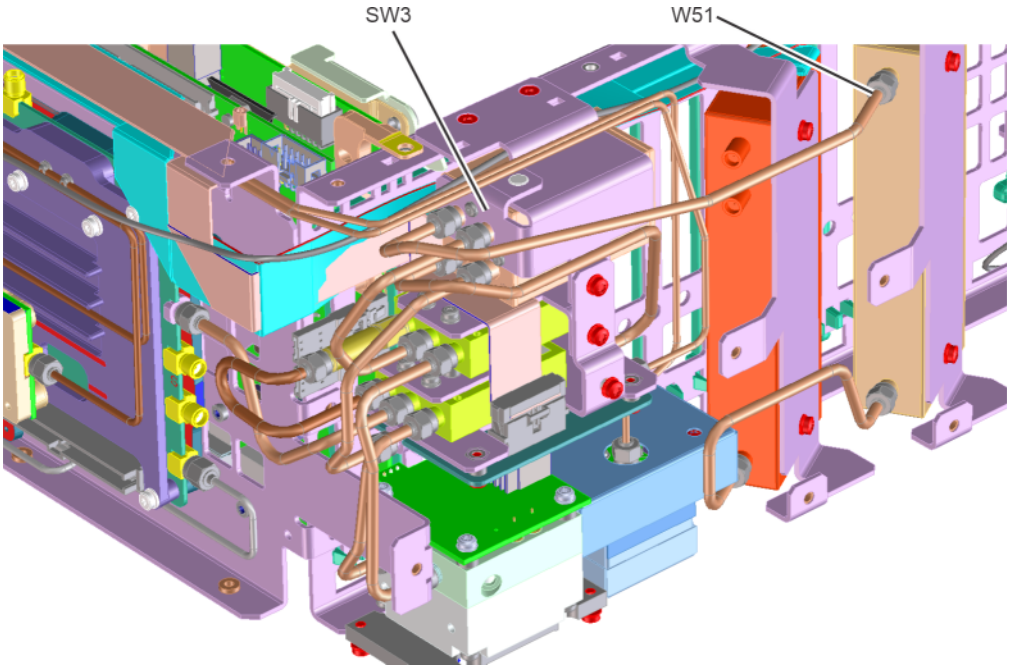

Table 18-12

Item	Keysight Part Number
W51	N9020-20143 (Options 503, 508, 513, 526 with Option LNP or MPB)
	N9020-20171 (Options 544, 550 with Option LNP or MPB)

18. Refer to Figure 18-52. Route all ribbon cables as shown to avoid being damaged when the top brace is installed.

Figure 18-52 Ribbon Cable Routing

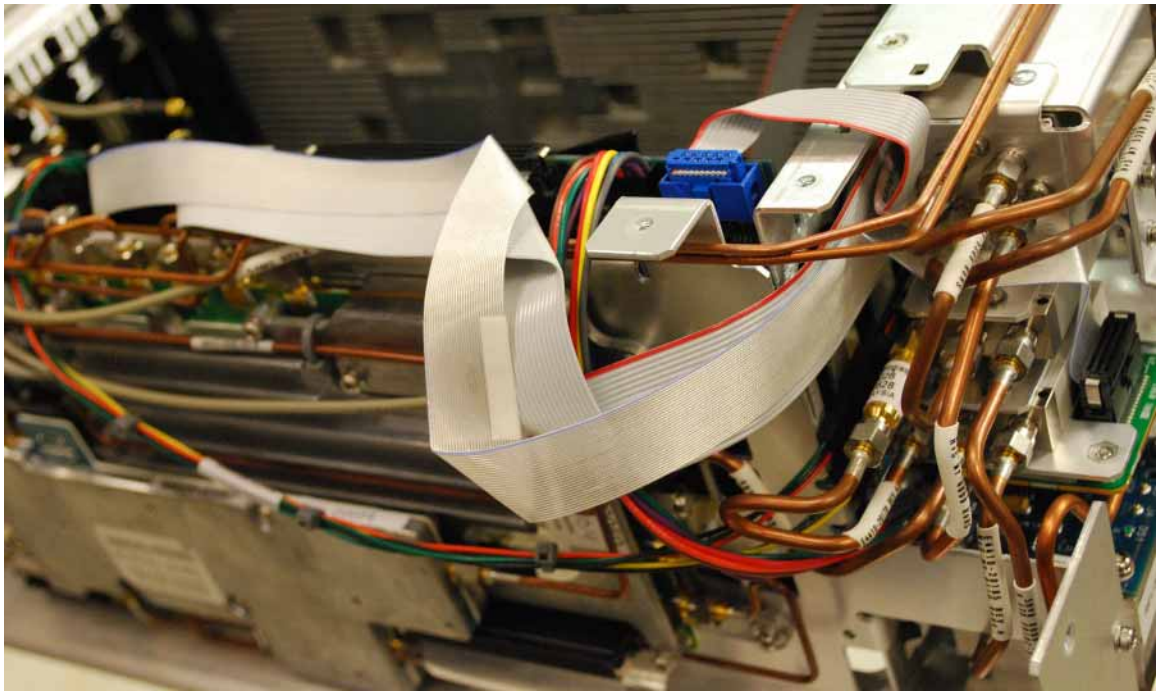

19. Refer to Figure 18-18. Position the RF bracket onto the chassis and replace the sixteen screws (0515-0372). Torque to 9 inch-pounds.
20. Replace the front panel. Refer to the Front Frame Assembly replacement procedure.
21. Replace the instrument outer case. Refer to the Instrument Outer Case replacement procedure.

RF Area (Options 544, 550)

Refer to Figure 18-53. The RF area consists of RF attenuator A **(1)**, RF attenuator B **(2)**, low band switch assembly **(3)**, YTF Preselector **(4)**, and YTO **(5)**. The RF area also includes the MPB and LNP switches if the options are present (refer to the "SW4 Microwave Preselector Bypass and SW3 Low Noise Path Switches (Options MPB and LNP)" section in this chapter.

Figure 18-53 RF Area Components and Cables (Options 544, 550)

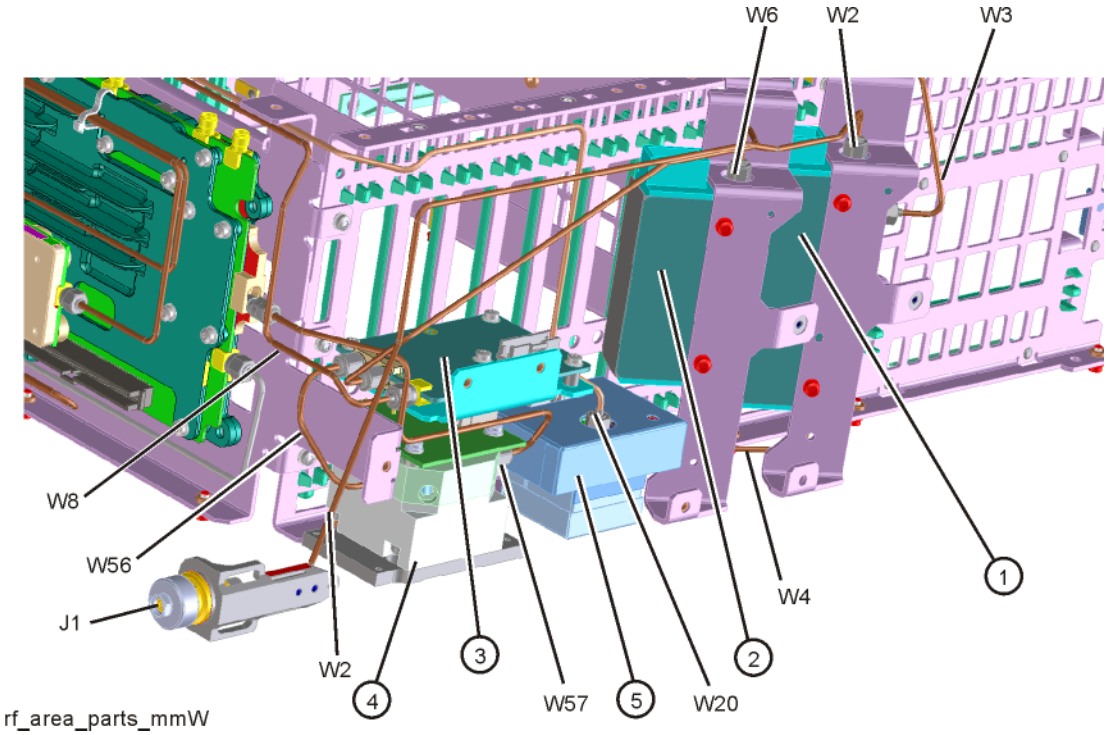

To gain access to the attenuators, low band switch, YTF Preselector, YTO, MPB switch, or LNP switch for removal, follow these steps:

1. Remove the instrument outer case. Refer to the Instrument Outer Case removal procedure.
2. Remove the front panel. Refer to the Front Frame Assembly removal procedure.

3. Refer to Figure 18-54. Remove the RF bracket **(1)** by removing the sixteen screws **(2)** (0515-0372) using the T-10 driver. If the instrument has Option RTS, Real Time Streaming, installed, there will be an additional screw **(3)** to be removed at the A28 Wideband Extension Board.

Figure 18-54 RF Bracket Removal

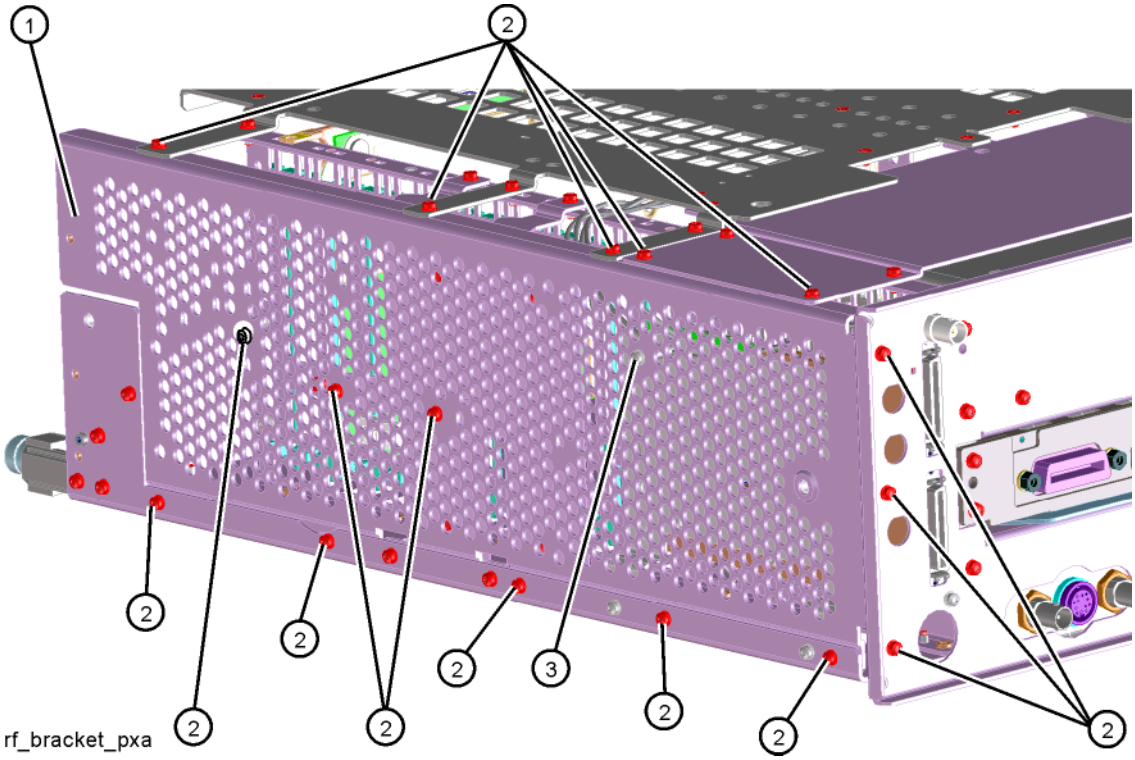

Attenuators

Removal

1. Refer to Figure 18-55. To remove Attenuator A **(1)** or Attenuator B **(2)**, remove the semi-rigid cables W2, W3, W4, or W6 attached to the attenuator using the 5/16 inch wrench.
2. Remove the ribbon cable attached to the attenuator.
3. Remove the two screws **(3)** or **(4)** (0515-0372) for each attenuator bracket to remove from the chassis using the T-10 driver.
4. Remove the attenuator and magnetic shield **(5)** or **(6)** from the bracket by removing the two screws (0515-0372).

Figure 18-55 Attenuators Removal

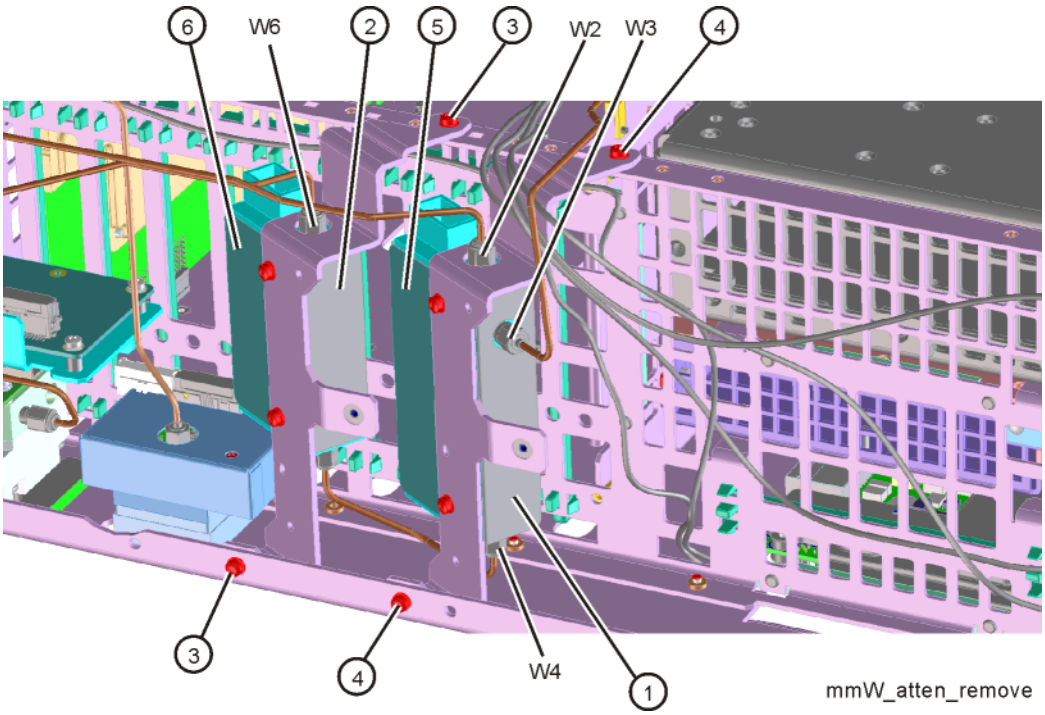

Replacement

1. Refer to Figure 18-55. Position the attenuator and magnetic shield in the bracket so that the attenuator ribbon connector end is “up”.
2. Replace the two screws (0515-0372) that attach the attenuator to the bracket. Torque to 9 inch-pounds.
3. Position the attenuator and bracket into the chassis and attach with the two screws (0515-0372). Torque to 9 inch-pounds.
4. Replace the ribbon cable and semi-rigid cables W2, W3, W4, or W6 to the attenuator. Torque the semi-rigid cables to 10 inch-pounds.
5. Refer to Figure 18-54. Position the RF bracket onto the chassis and replace the sixteen screws (0515-0372). Torque to 9 inch-pounds.
6. Replace the front panel. Refer to the Front Frame Assembly replacement procedure.
7. Replace the instrument outer case. Refer to the Instrument Outer Case replacement procedure.

Table 18-13

Item	Keysight Part Number
W2	N9020-20100 (Option CNF)
	N9020-20139 (Option C35)
	N9020-20173 (Option 544, 550)
W3	N9020-20023 (Options 503, 508, 513, 526)
	N9020-20072 (Options 544, 550)
W4	N9020-20025 (Options 503, 508, 513, 526)
	N9020-20068 (Options 544, 550)
W6	N9020-20024 (Options 503, 508, 513, 526 without Option MPB or LNP)
	N9010-20004 (Options 544, 550 without Option MPB or LNP)

Low Band Switch

Removal

NOTE

If the analyzer has hardware for Options MPB and LNP installed, perform the removal procedure for "SW4 Microwave Preselector Bypass and SW3 Low Noise Path Switches (Options MPB and LNP)" first.

1. Refer to Figure 18-56. Remove the ribbon cable W7.
2. Remove the semi-rigid cables W6, W8, and W56 using the 5/16 inch wrench. W6 and W56 are only present on analyzers without Option MPB and/or LNP. If either of these options are present, the equivalent cables would be W52 (for W6) and W54 (for W56).
3. Refer to Figure 18-57. Remove the two screws **(2)** (0515-0372) using the T-10 driver. The low band switch **(1)** can now be removed from the chassis.
4. Refer to Figure 18-58. To separate the switch from the bracket, remove the five screws **(3)** (0515-0372) using the T-10 driver.

Figure 18-56 Low Band Switch Cable Removal

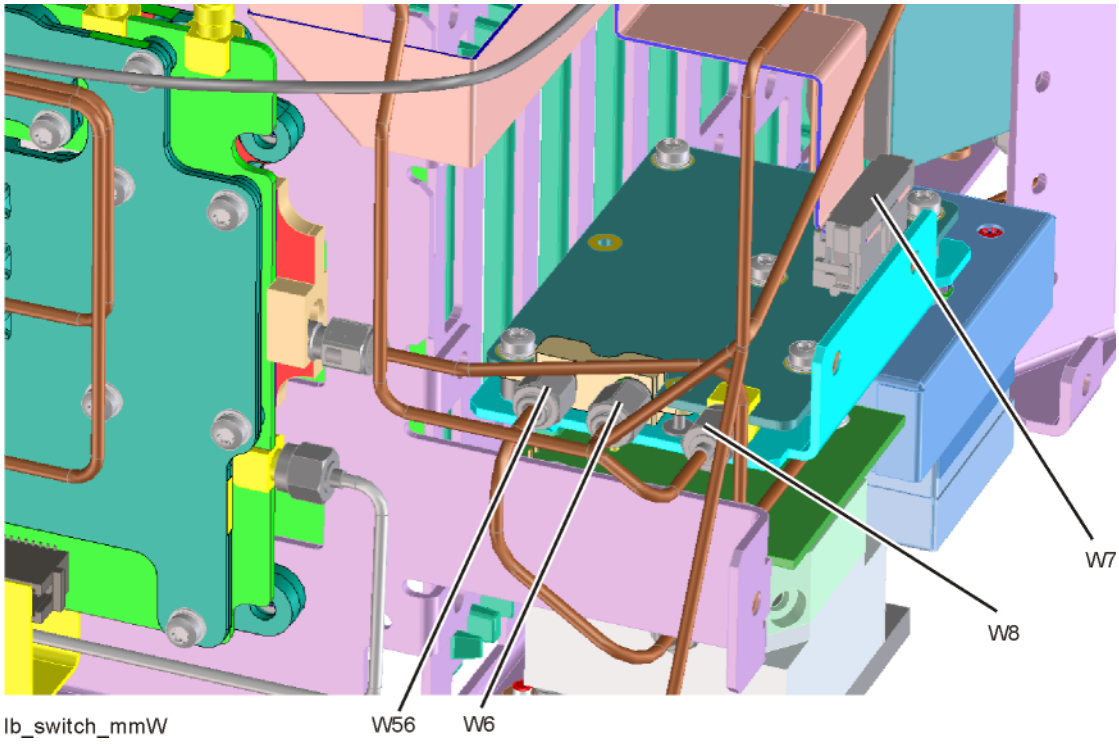

Figure 18-57 Low Band Switch Bracket Removal

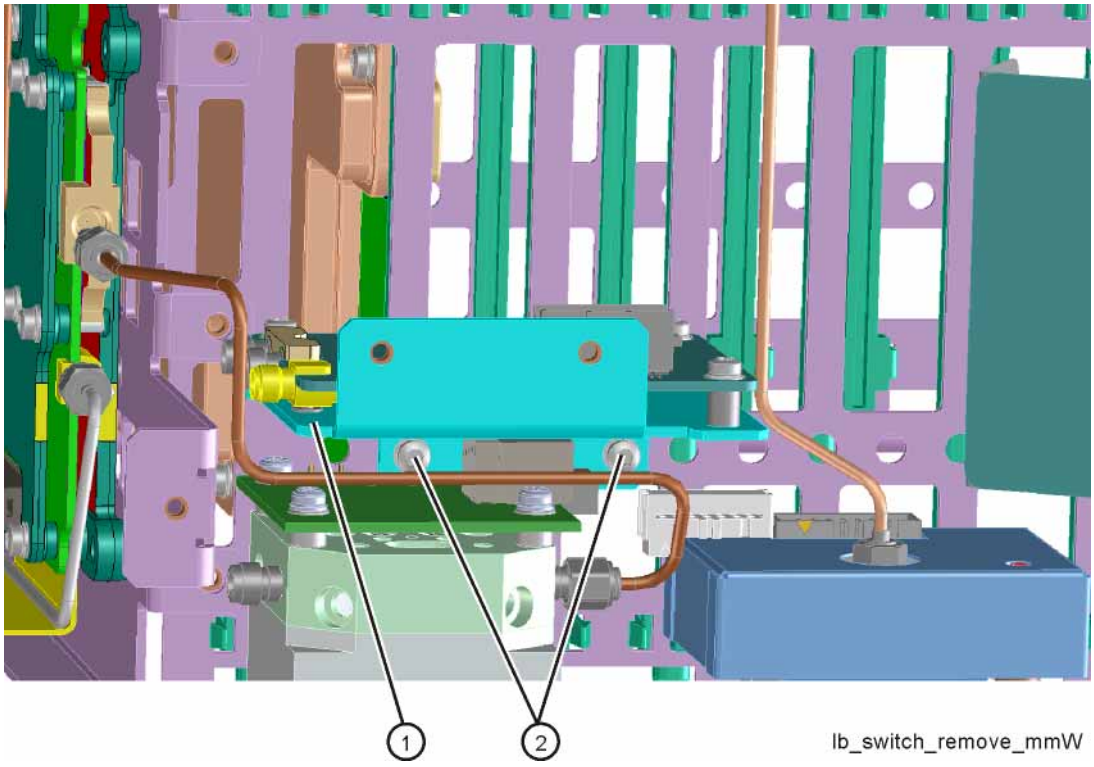

Figure 18-58 Low Band Switch and Bracket Separation

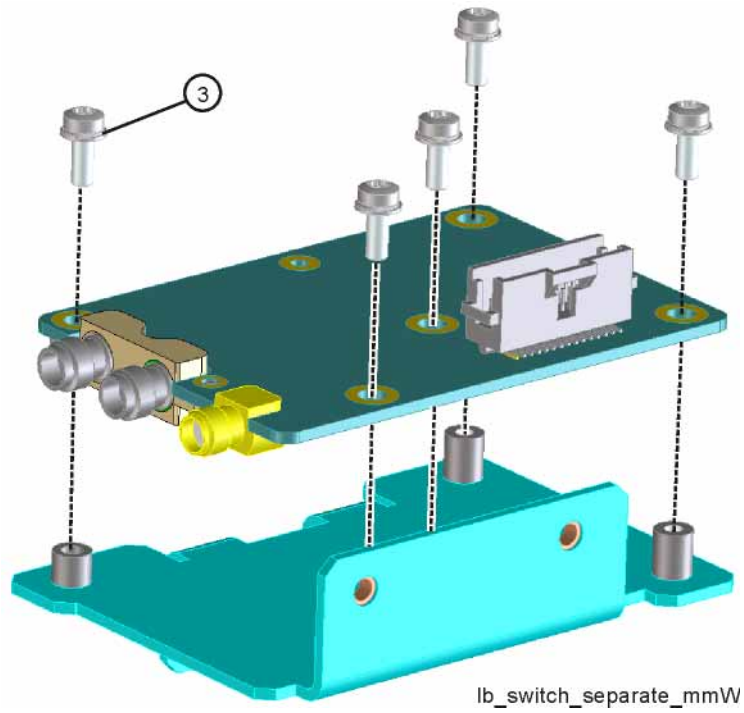

Replacement

1. Refer to Figure 18-58. Place the switch onto the bracket and replace the five screws **(3)** (0515-0372). Torque to 9 inch-pounds.
2. Place the switch/bracket into place into the chassis and replace the two screws (0515-0372). Torque to 9 inch-pounds starting with the screw closest to the front of the instrument.
3. Refer to Figure 18-56. Replace the semi-rigid cables W6, W8, and W56. Torque to 10 inch-pounds.
4. Replace the ribbon cable W7. Ensure locking tabs on the sides of the connector are engaged.
5. Refer to Figure 18-54. Position the RF bracket onto the chassis and replace the sixteen screws (0515-0372). Torque to 9 inch-pounds.
6. Replace the front panel. Refer to the Front Frame Assembly replacement procedure.
7. Replace the instrument outer case. Refer to the Instrument Outer Case replacement procedure.

Table 18-14

Item	Keysight Part Number
W6	N9020-20024 (Options 503, 508, 513, 526 without Option MPB or LNP) N9010-20004 (Options 544, 550 without Option MPB or LNP)
W8	N9020-20101 (Options 503, 508, 513, 526 N9020-20101) N9020-20131 (Options 544, 550 N9020-20131)
W56	N9020-20123 (Options 503, 508, 513, 526 without Option MPB or LNP) N9010-20005 (Options 544, 550 without Option MPB or LNP)

YTF Preselector

Removal

1. Refer to Figure 18-59. Remove cables W56 and W57 from the YTF Preselector **(1)**.
2. Remove the wire harness W11.
3. Refer to Figure 18-60. From the bottom of the instrument, remove the four screws **(1)** (0515-0372). The YTF Preselector can now be removed from the chassis (may require lifting up slightly on the low band switch).

Figure 18-59 YTF Preselector Removal

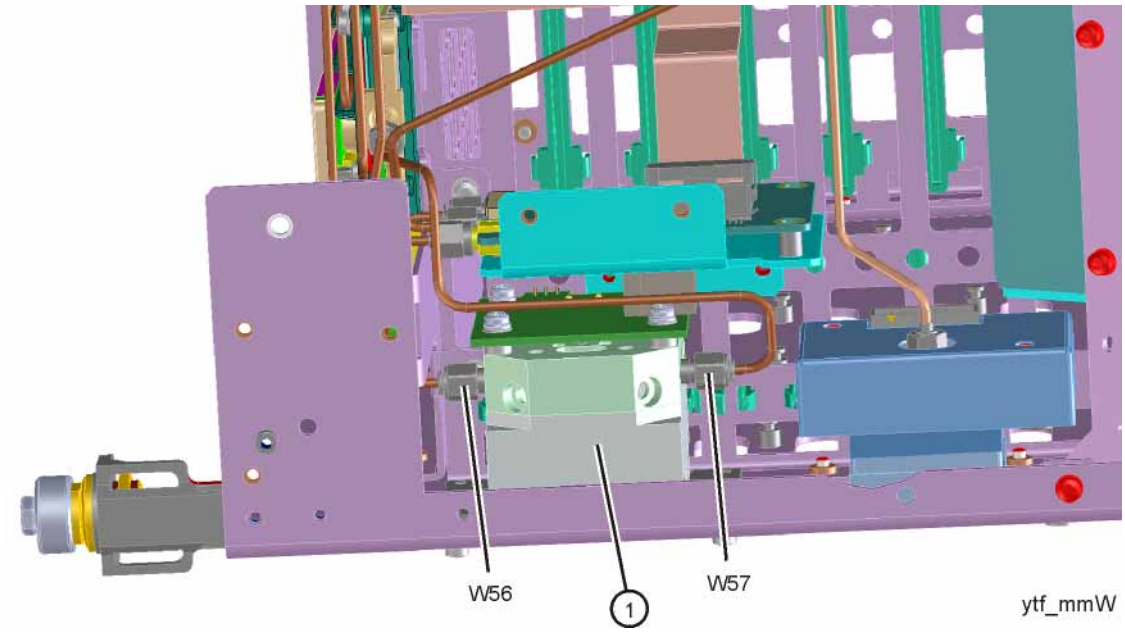

Figure 18-60 YTF Preselector Screws

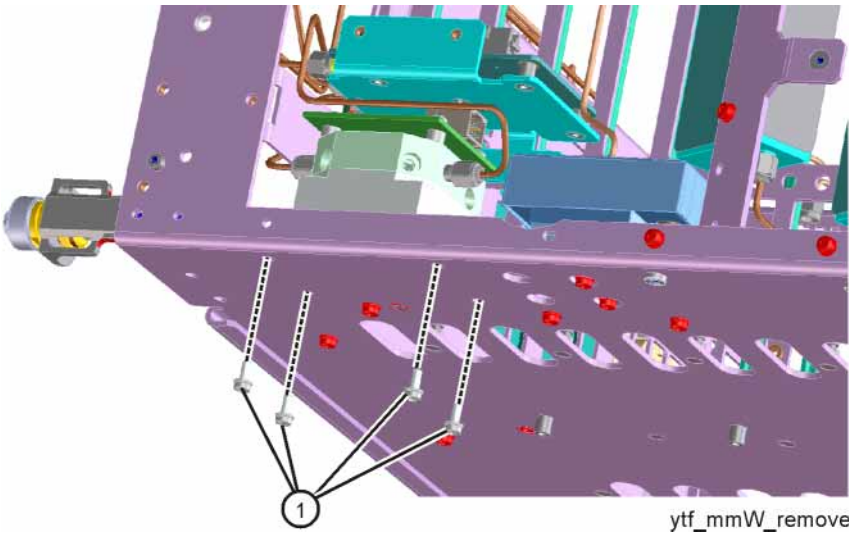

Replacement

1. Inspect the chassis where the YTF Preselector mounts and remove the gap pad if present (see Figure 18-61, item **(1)**). The gap pad may remain attached to the faulty YTF Preselector.
2. Refer to Figure 18-61. Install the replacement gap pad **(1)** (5022-7179) into the recess in the base of the replacement YTF Preselector **(2)** Refer to A12MP1 in Chapter 17, "Replaceable Parts.". Peel back one corner of the clear plastic backing on the pink side of the gap pad. Remove the blue backing from the other side of the gap pad. Install the gap pad as shown with the pink side exposed. Carefully peel off the clear plastic backing and smooth the gap pad into the recess.

Figure 18-61 Gap Pad Installation

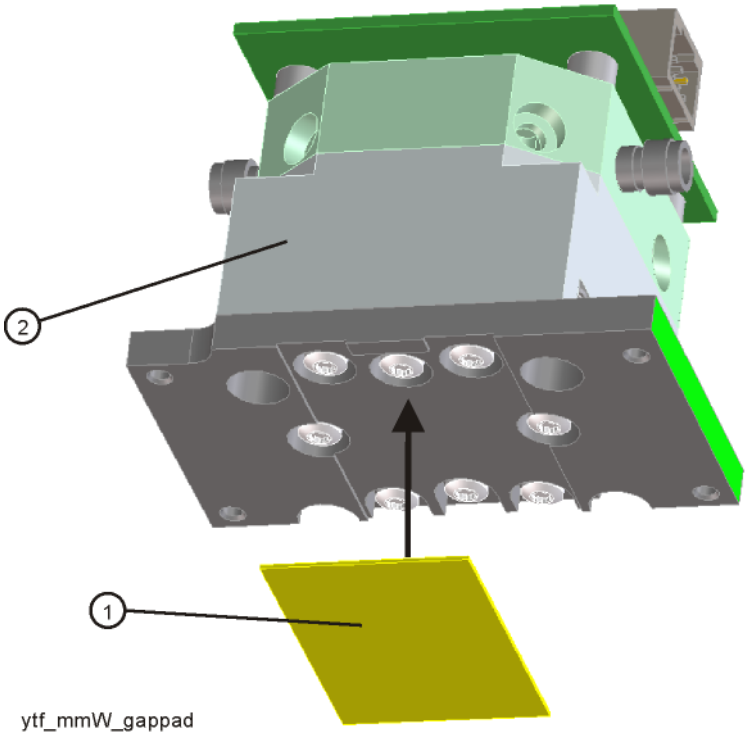

3. Refer to Figure 18-60. Place the YTF Preselector into the chassis with the YTF control connector toward the rear of the instrument. Replace the four screws **(1)** (0515-0372). Torque to 9 inch-pounds.
4. Figure 18-59. Replace the cables W56 and W57. Torque to 10 inch-pounds.
5. Replace the wire harness W11.
6. Refer to Figure 18-54. Position the RF bracket onto the chassis and replace the sixteen screws (0515-0372). Torque to 9 inch-pounds.
7. Replace the front panel. Refer to the Front Frame Assembly replacement procedure.

8. Replace the instrument outer case. Refer to the Instrument Outer Case replacement procedure.

Table 18-15

Item	Keysight Part Number
W56	N9020-20123 (Options 503, 508, 513, 526 without Option MPB or LNP) N9010-20005 (Options 544, 550 without Option MPB or LNP)
W57	N9020-20124 (Options 503, 508, 513, 526 without Option MPB or LNP) N9010-20006 (Options 544, 550 without Option MPB or LNP)

YTO

Removal

1. Refer to Figure 18-62. Remove cable W20 from the YTO **(1)**.
2. Remove cable W4.
3. Remove the ribbon cable W23 by pulling forward on the locking latch.
4. Refer to Figure 18-63. From the bottom of the instrument, remove the two screws **(1)** (0515-0372). The YTO can now be removed from the chassis.

Figure 18-62 YTO Removal

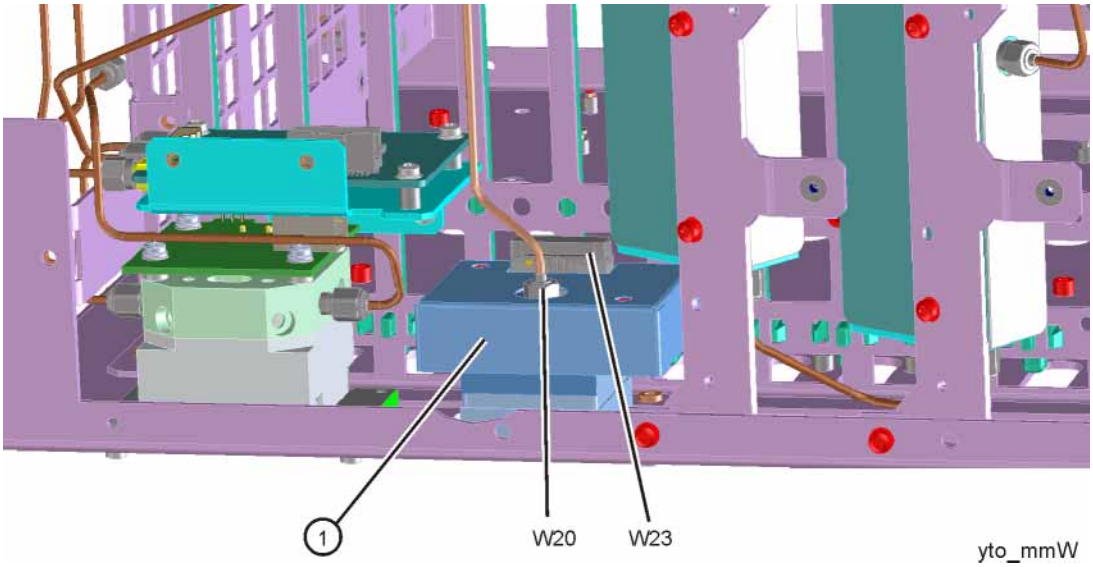

Figure 18-63 YTO Screws

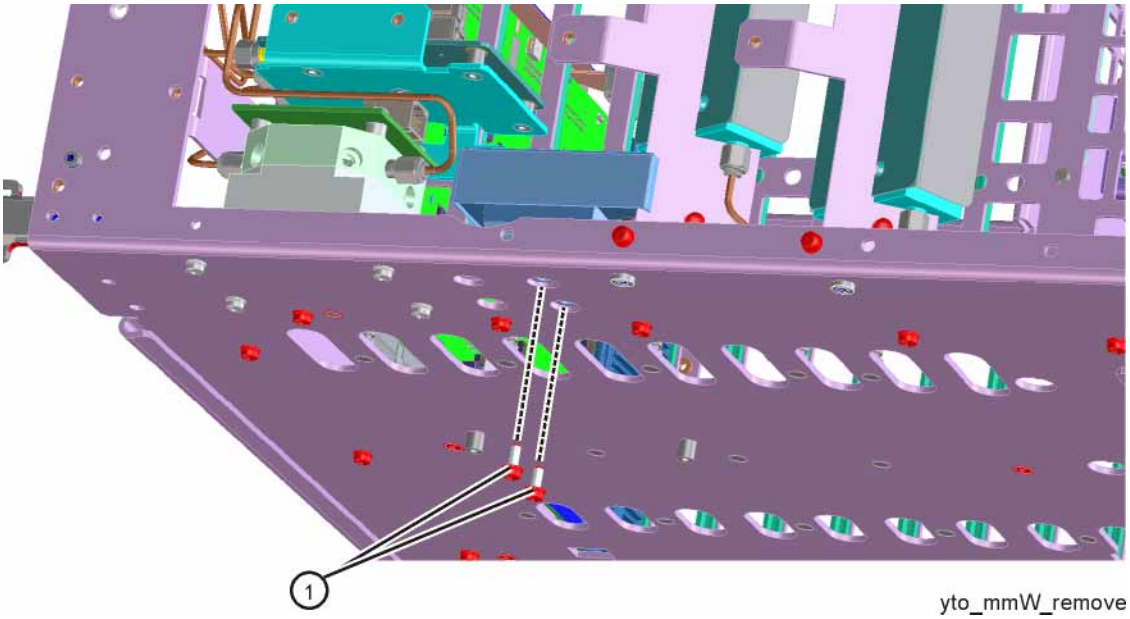

Replacement

1. Refer to Figure 18-63. Place the YTO into the chassis. Replace the two screws **(1)** (0515-0372). Torque to 9 inch-pounds.
2. Figure 18-62. Replace the cables W20. Torque to 10 inch-pounds.
3. Replace the ribbon cable W23. Ensure the locking latch is engaged.
4. Refer to Figure 18-54. Position the RF bracket onto the chassis and replace the sixteen screws (0515-0372). Torque to 9 inch-pounds.
5. Replace the front panel. Refer to the Front Frame Assembly replacement procedure.
6. Replace the instrument outer case. Refer to the Instrument Outer Case replacement procedure.

Table 18-16

Item	Keysight Part Number
W20	N9020-20018

SW4 Microwave Preselector Bypass and SW3 Low Noise Path Switches (Options MPB and LNP)

Removal

1. Refer to Figure 18-64. Remove rigid cable W51 (N9020-20171) **(1)** from SW3 LNP (top) switch port 1 to Attenuator B output.

Figure 18-64 W51 Cable Removal

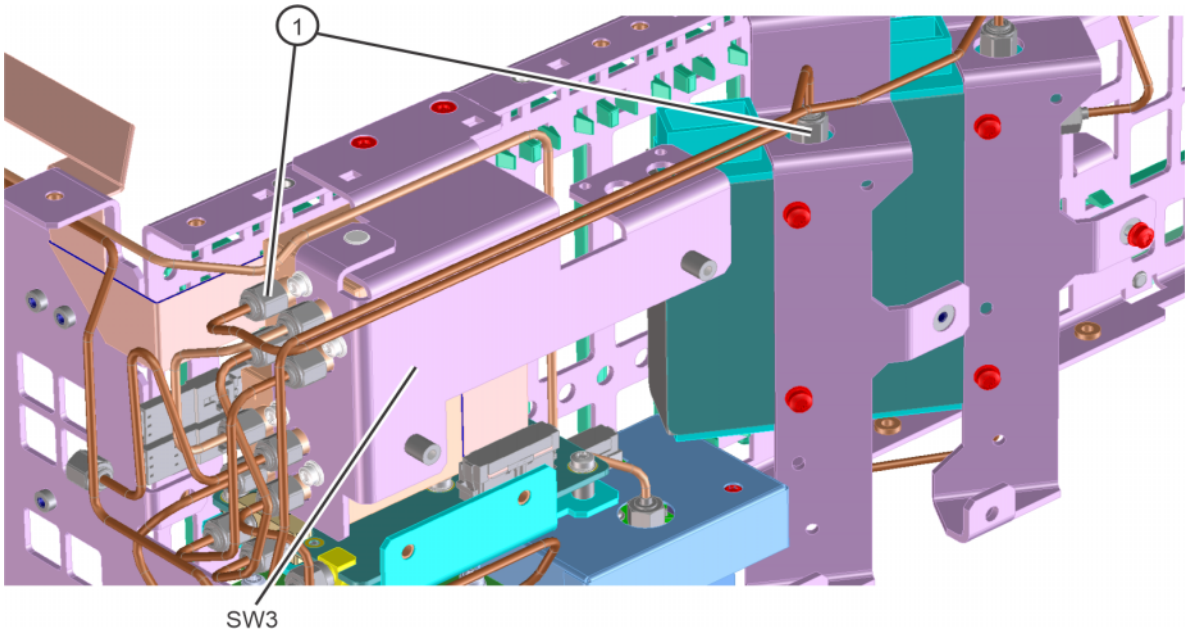

2. Refer to Figure 18-65 and Figure 18-66. Remove cable W62 (N9020-20130) **(3)** from SW4 MPB (bottom) switch port 2 to Front End Assembly J9.
3. Remove cable W61 (N9020-20129) **(2)** from bottom switch port 3 to YTF Assembly.
4. Remove cable W59 (N9020-20151) **(1)** from top switch port 2 to bottom switch port 1.

Figure 18-65 W62, W61, and W59 Cables Removal

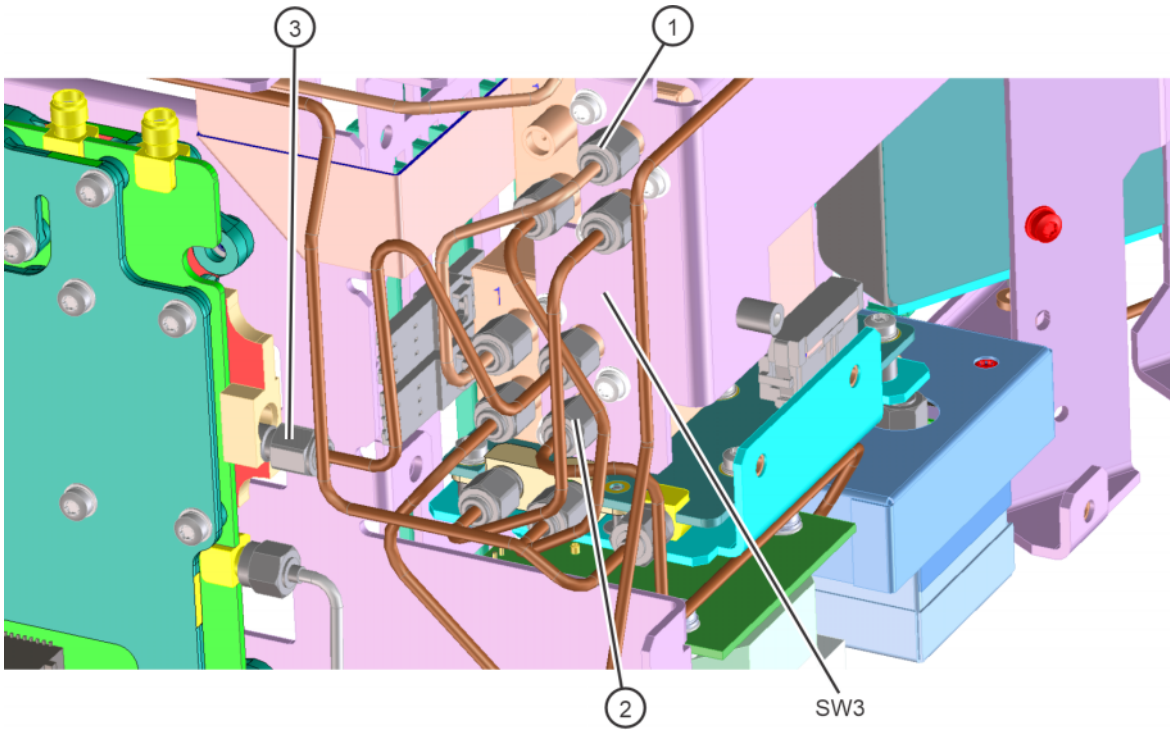

Figure 18-66 Switch Ports

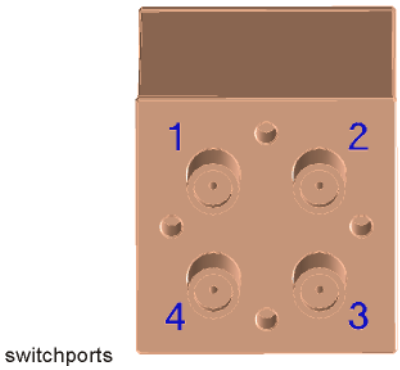

5. Refer to Figure 18-67. Remove cable W20 (N9020-20152) **(3)** from YTO to Front End Assembly J4.
6. Remove cable W8 (N9020-20131) **(2)** from Low Band Switch J2 to Front End Assembly J2.
7. Remove cable W60 (N9020-20128) **(1)** from bottom switch port 4 to YTF.

Figure 18-67 W20, W8, and W60 Cables Removal

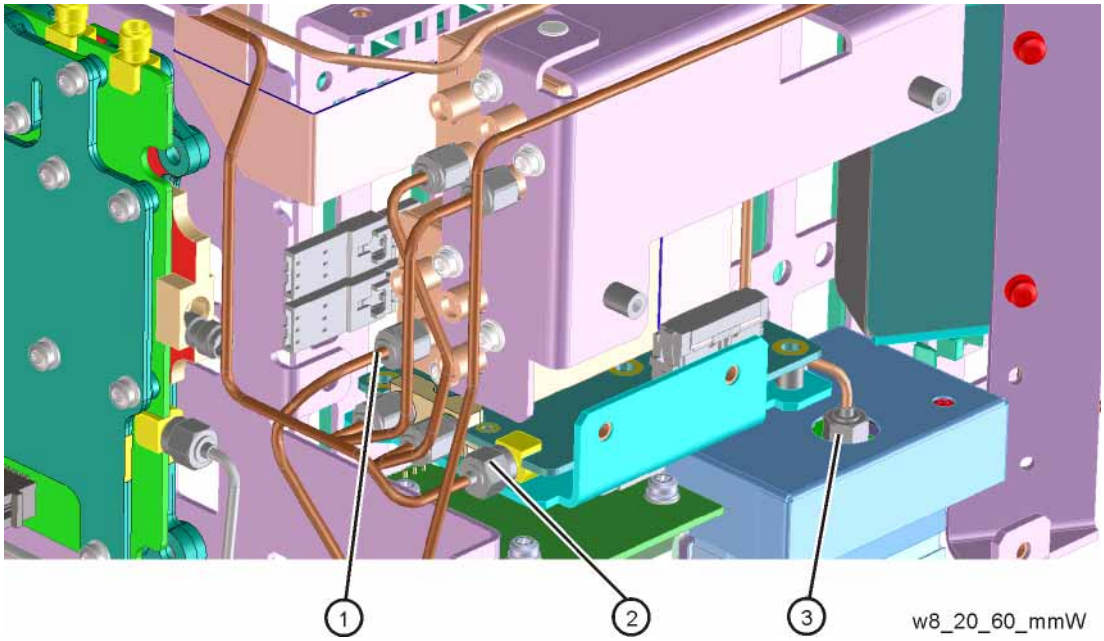

8. Refer to Figure 18-68. Remove cable W54 (N9020-20127) **(2)** from top switch port 3 to Low Band Switch J3.
9. Remove cable W52 (N9020-20125) **(1)** from top switch port 4 to Low Band Switch J1.

Figure 18-68 W54 and W52 Cable Removal

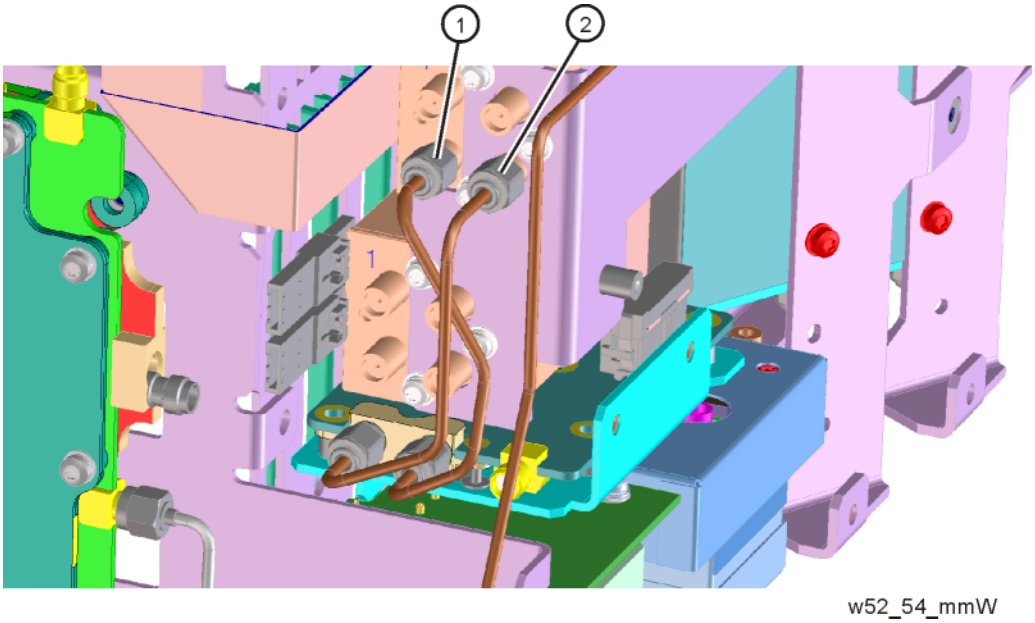

10. Refer to Figure 18-69. Disconnect the wire harness connector **(1)** located between the MPB switch and the frame. Remove the ribbon cable from the rear of the top switch.

Figure 18-69 Wire Harness Disconnect

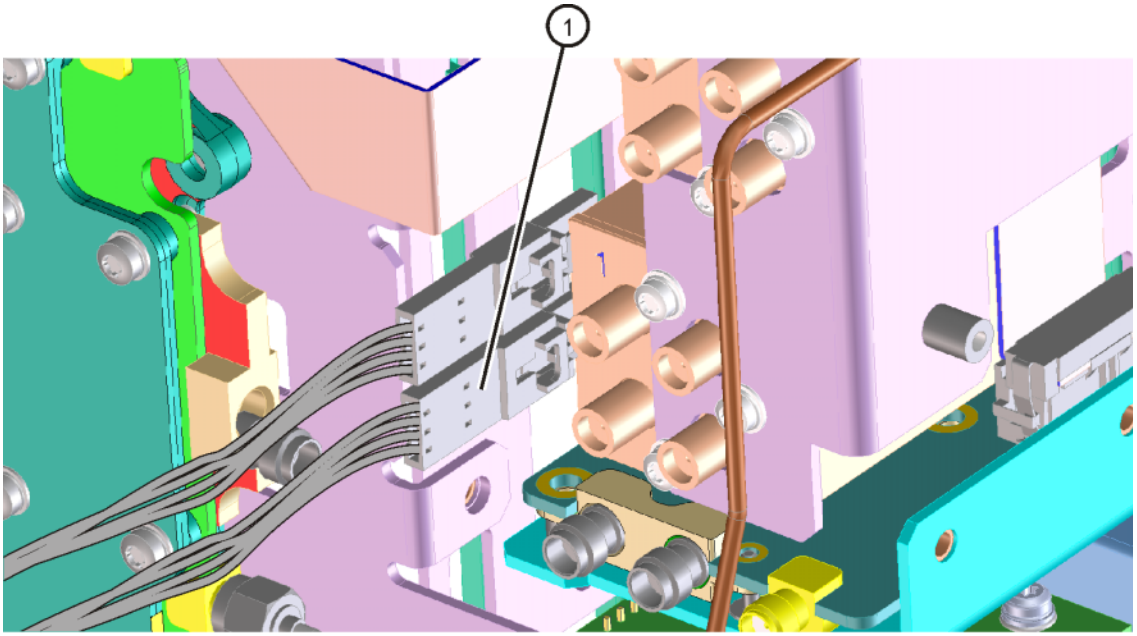

11. Refer to Figure 18-70. Remove the switch/bracket assembly **(1)** by removing the two screws (0515-2032) at the frame **(2)**.

Figure 18-70 Switch Assembly Removal

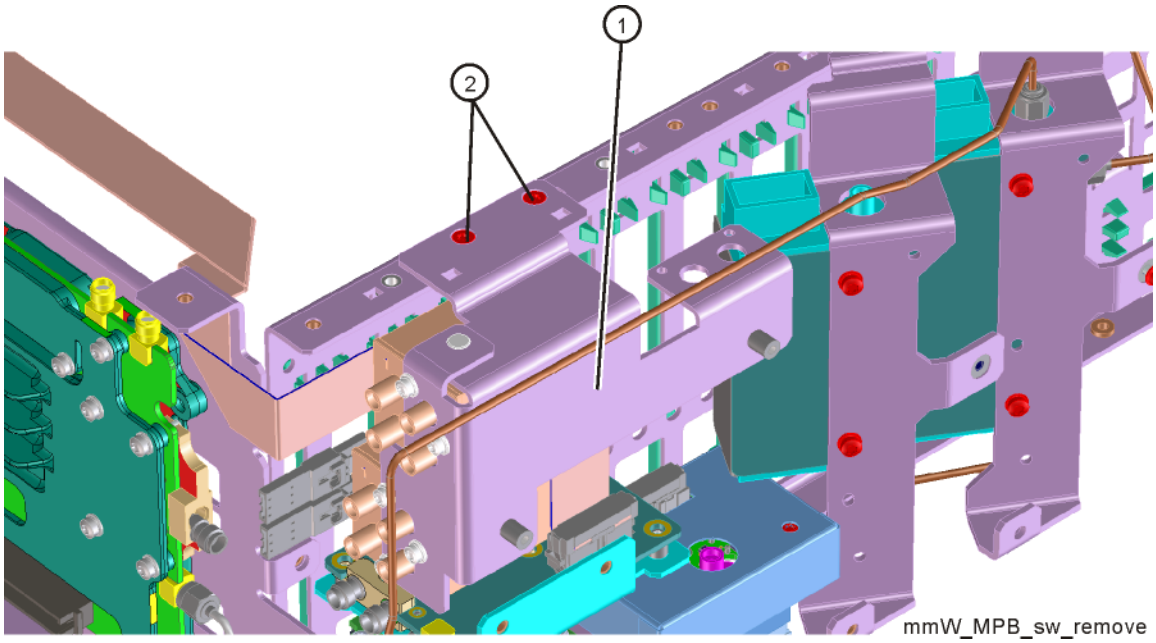

12. Refer to Figure 18-71. To separate the LNP switch **(2)** and MPB switch **(4)** from the bracket **(1)** (N9020-00021), remove the three screws **(3)** (0515-1934) for each switch.

Figure 18-71 Bracket Mount to LNP and MPB Switches

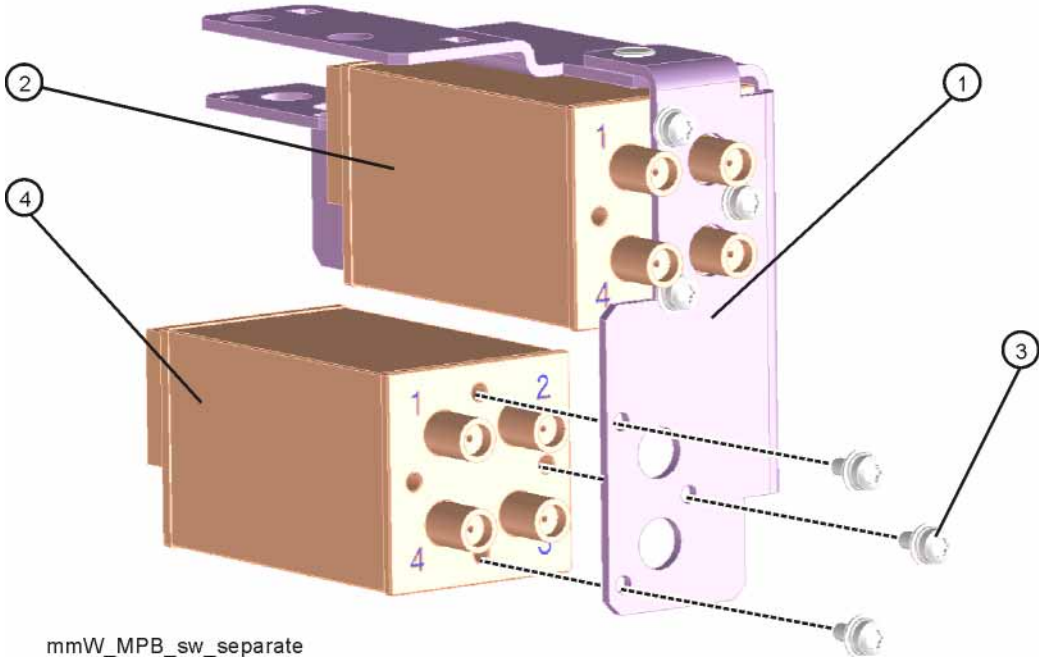

Replacement

1. Refer to Figure 18-71. Attach LNP switch **(2)** and MPB switch **(4)** to bracket with three screws 0515-1934 for each switch. Note that the switch with the wire pigtail **(4)** mounts below the switch without the pigtail **(2)**. Torque to 6 inch-lbs.
2. Place the switch/bracket assembly into the frame and secure with the two screws 0515-2032. Torque to 9 inch-lbs.
3. Refer to Figure 18-72. Route W7 in between the two switches as shown and insert W7 connector into Low Band Switch header. Ensure the locking tabs are engaged on both sides of the connector.

Figure 18-72 W7 Routing

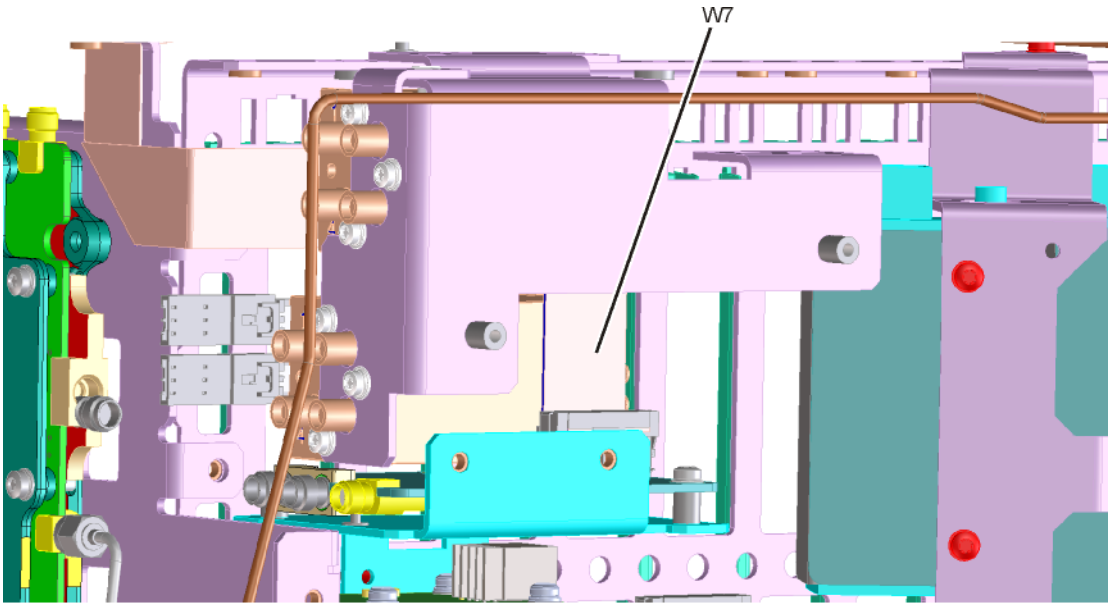

lbsw_ribbon_route

4. Reconnect the wire harness connector. Once connected, position the connections along side the switches as shown in Figure 18-69. Plug in the ribbon cable to the rear of the top switch.
5. Refer to Figure 18-68. Replace cable W52 (N9020-20125) **(1)** between top switch port 4 to Low Band Switch J1. Torque to 10 inch-pounds.
6. Replace cable W54 (N9020-20127) **(2)** between top switch port 3 to Low Band Switch J3. Torque to 10 inch-pounds.
7. Refer to Figure 18-67. Replace cable W60 (N9020-20128) **(1)** between bottom switch port 4 to YTF. Torque to 10 inch-pounds.
8. Replace cable W8 (N9020-20131) **(2)** between Low Band Switch J2 to Front End Assembly J2. Torque to 10 inch-pounds.
9. Replace cable W20 (N9020-20152) **(3)** between YTO to Front End Assembly J4. Torque to 10 inch-pounds.
10. Replace cable W59 (N9020-20151) **(1)** between top switch port 2 to bottom switch port 1. Torque to 10 inch-pounds.
11. Replace cable W61 (N9020-20129) **(2)** between bottom switch port 3 to YTF Assembly. Torque to 10 inch-pounds.
12. Refer to Figure 18-65. Replace cable W62 (N9020-20130) **(3)** between bottom switch port 2 to Front End Assembly J9. Torque to 10 inch-pounds.
13. Refer to Figure 18-64. Replace rigid cable W51 (N9020-20171) **(1)** between top switch port 1 to Attenuator B output. Torque to 10 inch-pounds.
14. Route all ribbon cables to avoid being damaged when the top brace is installed.
15. Refer to Figure 18-54. Position the RF bracket onto the chassis and replace the sixteen screws (0515-0372). Torque to 9 inch-pounds.
16. Replace the front panel. Refer to the Front Frame Assembly replacement procedure.
17. Replace the instrument outer case. Refer to the Instrument Outer Case replacement procedure.

RF Front End Assembly

Removal

1. Remove the instrument outer case. Refer to the Instrument Outer Case removal procedure.
2. Remove the instrument top brace. Refer to the Top Brace and Power Supply Bracketremoval procedure.
3. Remove the front panel. Refer to the Front Frame Assembly removal procedure.
4. Refer to Figure 18-73 and Figure 18-74. Using the 5/16 inch wrench, remove the cables attached to A13A1J1, A13A1J2, A13A1J4, A13A1J5, A13A1J6, A13A1J7, A13A1J9 on the RF Front End Assembly. If the analyzer has Option EXM, remove the cables attached to A13A1J8 and A13A1J13 also.
5. Remove the W22 and W28 ribbon cables from Front End Controller board connectors J102 and J1300. The ribbon cables then can be removed from the Front End Assembly connectors A13A1J12 and A13A2J1 once it is out of the instrument.
6. Remove the six screws **(1)** (0515-0372) using the T-10 driver. The RF Front End Assembly can now be removed from the chassis.

Figure 18-73 RF Front End Assembly Removal - Microwave

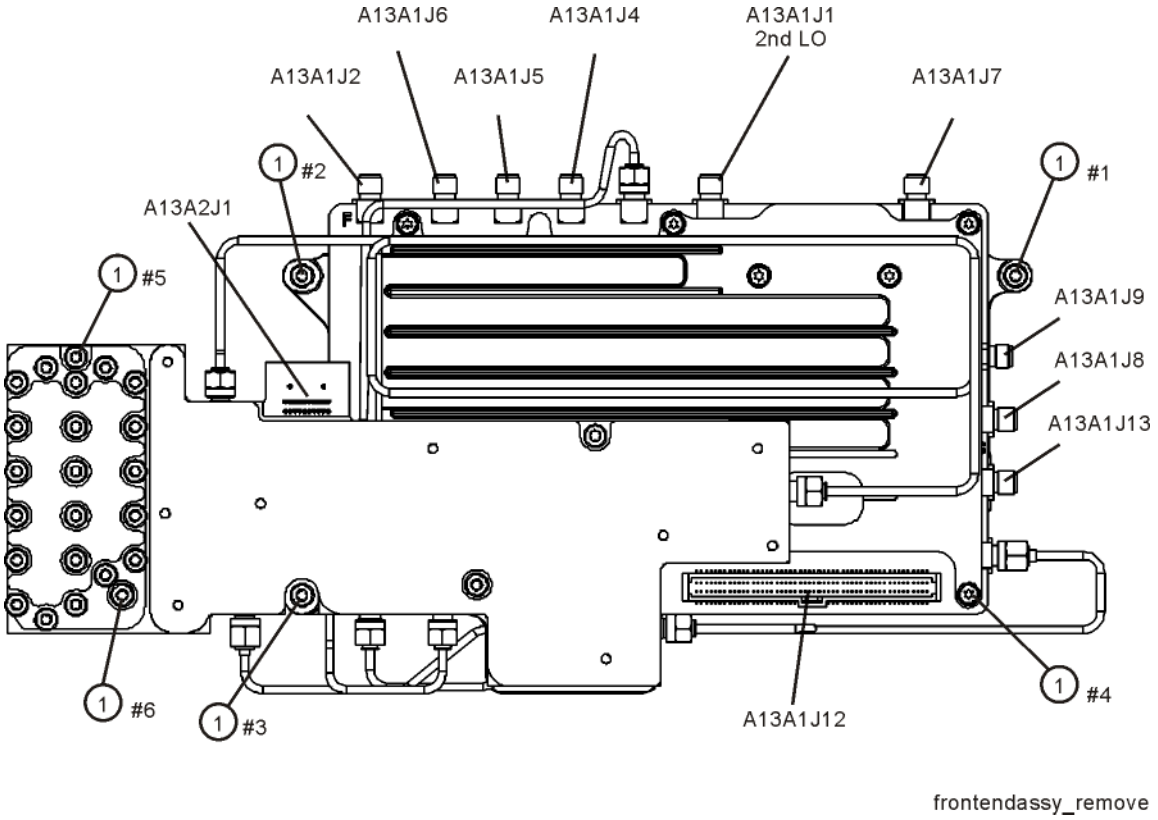

Figure 18-74 RF Front End Assembly Removal - Millimeter Wave

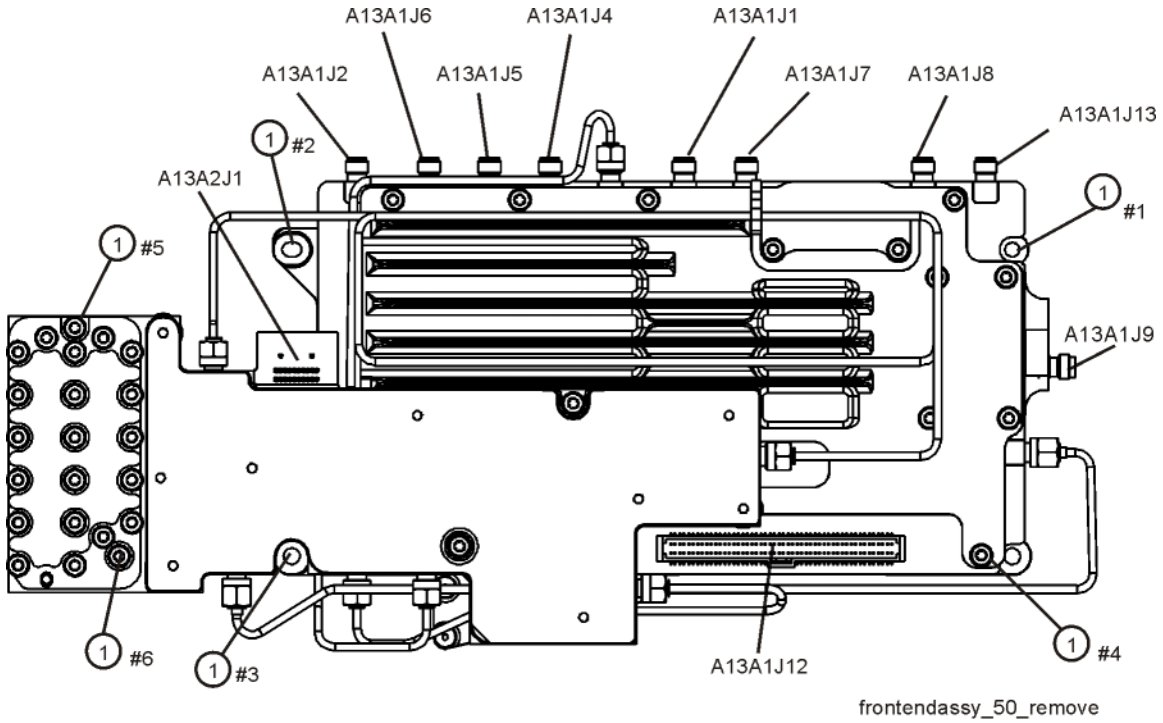

Replacement

1. Refer to Figure 18-75. Attach the W22 ribbon cable to the Front End Assembly first. Route behind the Front End Assembly and ensure the cable is engaged under the tabs, then place the RF Front End Assembly into the chassis. If you are replacing the Front End Assembly make sure to reinstall the 50 ohm load onto A13A1J8 if the analyzer does not have Option EXM. Torque to 10 inch-pounds.

Figure 18-75 RF Front End Assembly Location

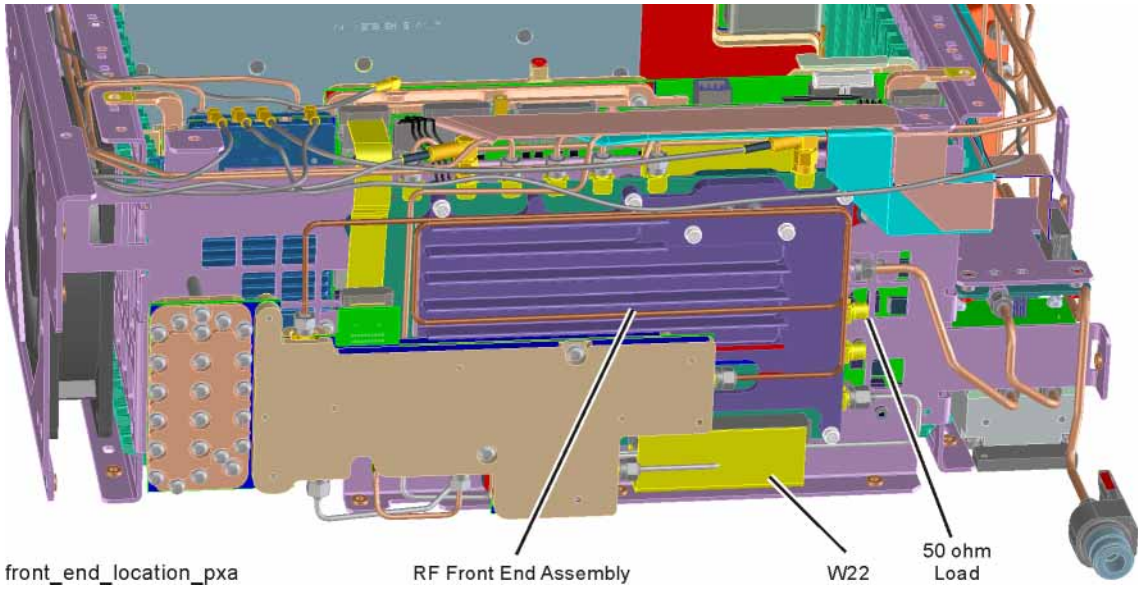

2. Refer to Figure 18-73. Replace the six screws **(1)** (0515-0372). Torque to 9 inch-pounds in the sequence shown, starting with #1.
3. Reattach W22 ribbon cable to Front End Controller J102 and W28 ribbon cable between Front End Controller J1300 and A13A2J1 on the RF Front End Assembly.
4. Reattach the cables to A13A1J1, A13A1J2, A13A1J4, A13A1J5, A13A1J6, A13A1J7, and A13A1J9 on the RF Front End Assembly. Reattach the cables to A13A1J8 and A13A1J13 if Option EXM is present. Torque the semi-rigid cables to 10 inch-pounds.
5. Replace the front panel. Refer to the Front Frame Assembly replacement procedure.
6. Replace the instrument top brace. Refer to the Top Brace and Power Supply Bracket replacement procedure.
7. Replace the instrument outer case. Refer to the Instrument Outer Case replacement procedure.

Front End Controller

Removal

1. Remove the instrument outer case. Refer to the Instrument Outer Case removal procedure.
2. Remove the instrument top brace. Refer to the Top Brace and Power Supply Bracket removal procedure.
3. Refer to Figure 18-76. Locate the Front End Controller **(1)**.

Figure 18-76 Assembly Locations

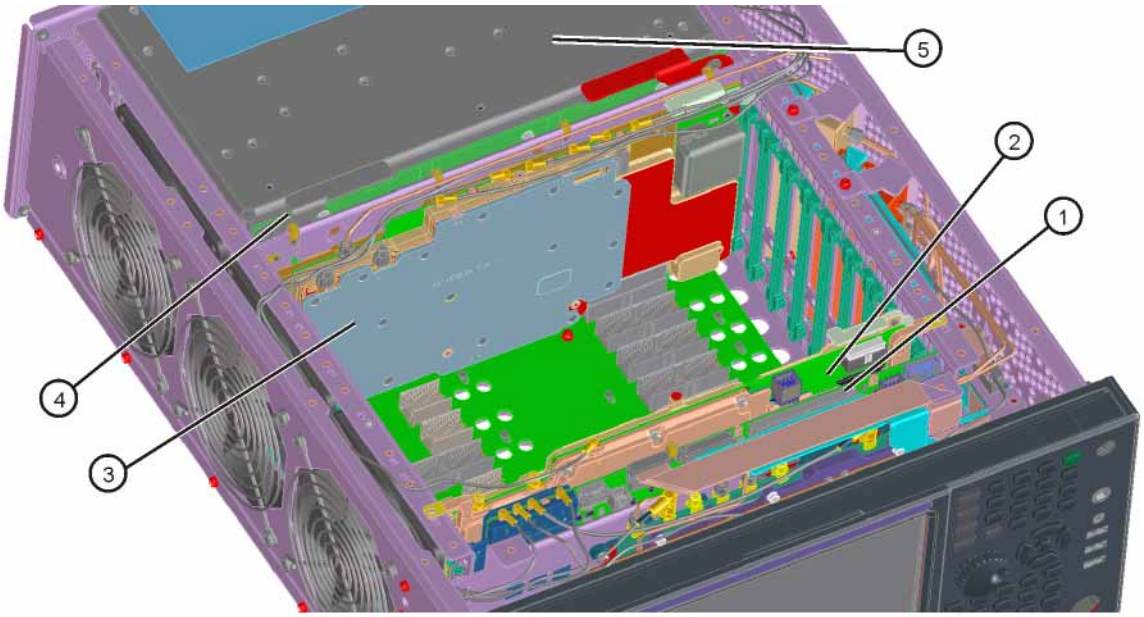

assy_locations_pxa

4. Refer to Figure 18-77. Remove the cables W25, W26, W16, W27, and W30 (Opt EXM) from the Front End Controller **(1)**.
5. Remove the ribbon cables W5, W22, W28, W7, and W55 and the wire harnesses W11 and W12 from the Front End Controller.
6. The Front End Controller can now be unplugged from the motherboard and lifted out of the chassis.

Figure 18-77 Front End Controller Cables

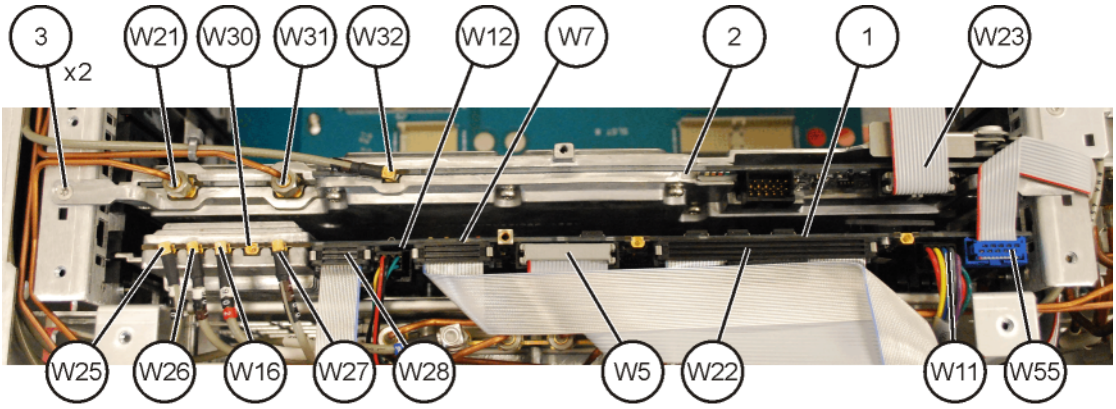

front cables pxa

Replacement

1. Refer to Figure 18-77. Install the Front End Controller into slot 11 in the chassis and press down to plug it into the motherboard.
2. Reattach the ribbon cables W5, W22, W28, W7, and W55 and the wire harnesses W11 and W12 to the Front End Controller.
3. Reattach the cables W25, W26, W16, W27, and W30 (Opt EXM) to the Front End Controller.
4. Replace the instrument top brace. Refer to the Top Brace and Power Supply Bracket replacement procedure.
5. Replace the instrument outer case. Refer to the Instrument Outer Case replacement procedure.

LO Synthesizer Assembly

Removal

1. Remove the instrument outer case. Refer to the Instrument Outer Case removal procedure.
2. Remove the instrument top brace. Refer to the Top Brace and Power Supply Bracket removal procedure.
3. Refer to Figure 18-78. Locate the LO Synthesizer assembly **(2)**.

Figure 18-78 Assembly Locations

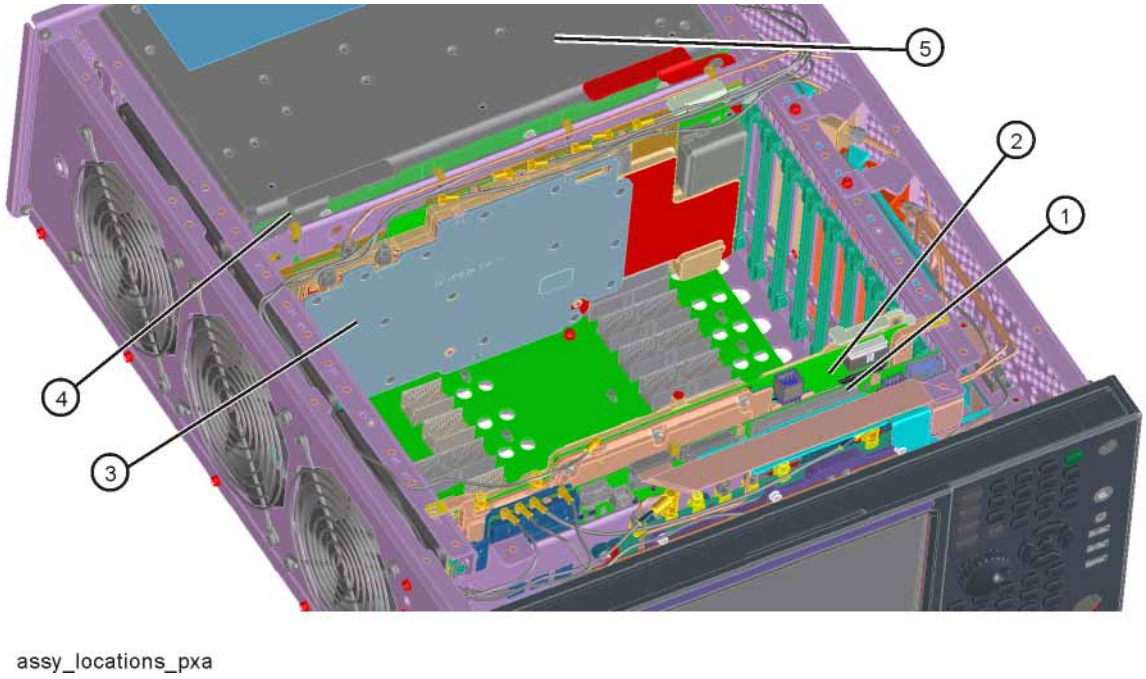

4. Refer to Figure 18-79. Remove the cables W21 and W31 from the LO Synthesizer assembly **(2)** using the 5/16 inch wrench.
5. Remove W23 and W32.
6. Remove the two screws **(3)** (0515-2032).

Figure 18-79 LO Synthesizer Assembly Removal

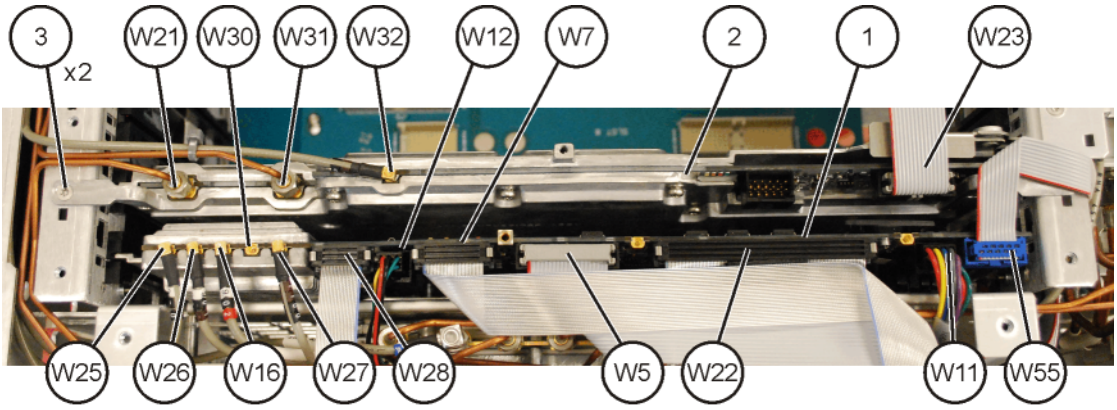

front cables pxa

7. Use the ejectors on the LO Synthesizer assembly to unplug from the motherboard and lift out of the chassis.

Replacement

1. Refer to Figure 18-79. Install the LO Synthesizer assembly into slot 10 in the chassis securing with the ejectors.
2. Reattach the cables W21 and W31 to the LO Synthesizer assembly. Torque to 10 inch-pounds.
3. Reattach the cables W23 and W32.
4. Reinstall the two screws **(3)** (0515-2032). Torque to 9 inch-pounds.
5. Replace the instrument top brace. Refer to the Top Brace and Power Supply Bracket replacement procedure.
6. Replace the instrument outer case. Refer to the Instrument Outer Case replacement procedure.

Table 18-17

Item	Keysight Part Number
W21	N9020-20019
W31	N9020-20021

Reference Assembly

Removal

1. Remove the instrument outer case. Refer to the Instrument Outer Case removal procedure.
2. Remove the top brace. Refer to the Top Brace and Power Supply Bracket removal procedure.
3. Refer to Figure 18-80. Locate the Reference assembly **(3)**.

Figure 18-80 Assembly Locations

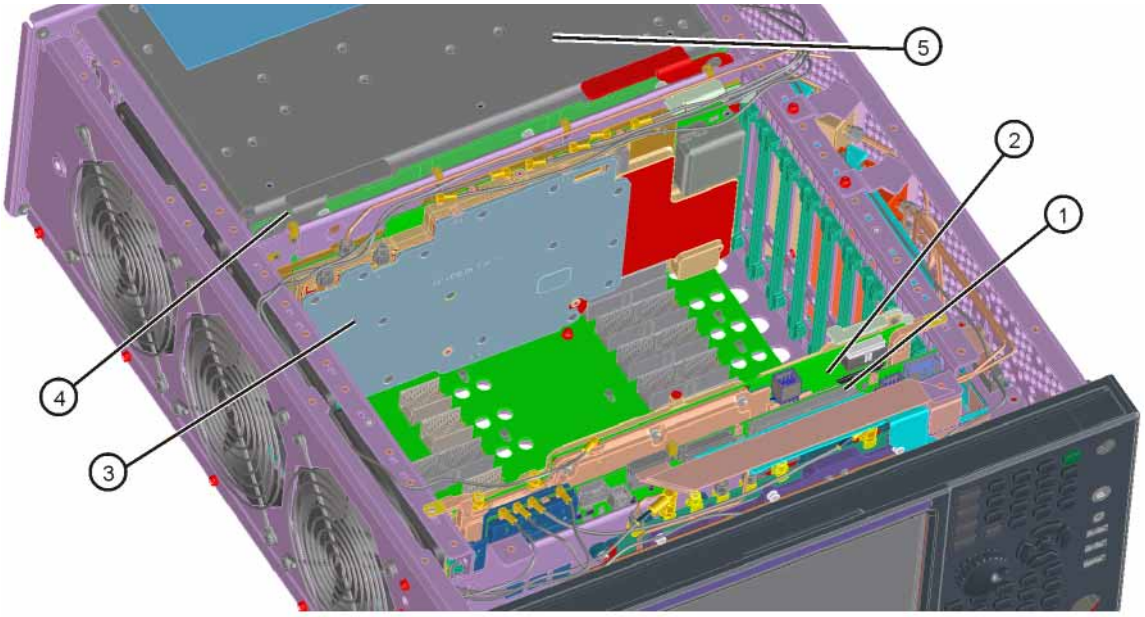

assy_locations_pxa

4. Refer to Figure 18-81. Remove cables W3, W18, and W31 from the reference assembly **(1)** using the 5/16-inch wrench.

Figure 18-81 Reference Board Cables

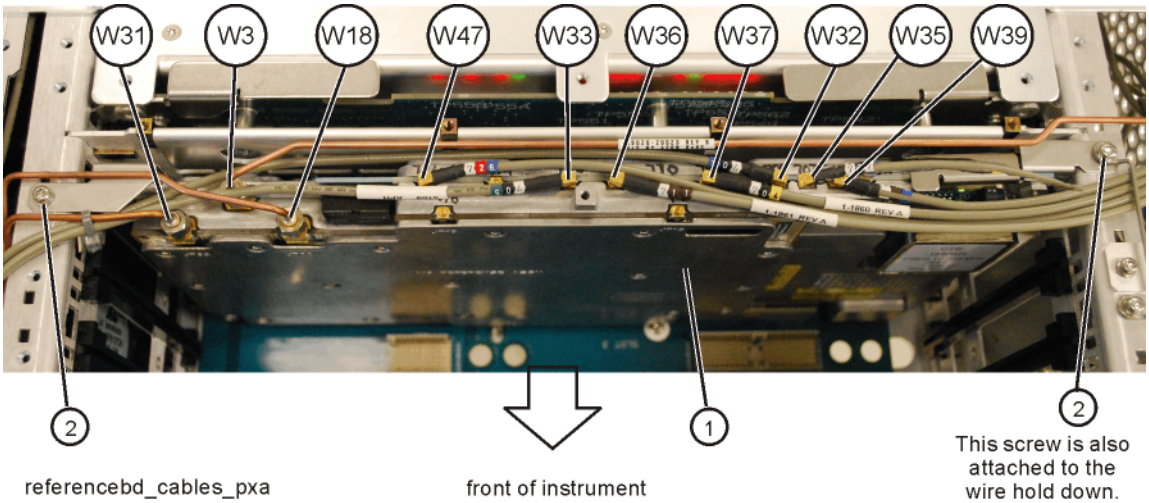

5. Remove the two screws **(2)** (0515-0372) attaching the Reference board to the chassis.

6. Refer to Figure 18-82. Remove the other screw (0515-0372) attaching the reference wire hold down 2 to the chassis. Remove wire hold down 2.

Figure 18-82 Wire Hold Downs

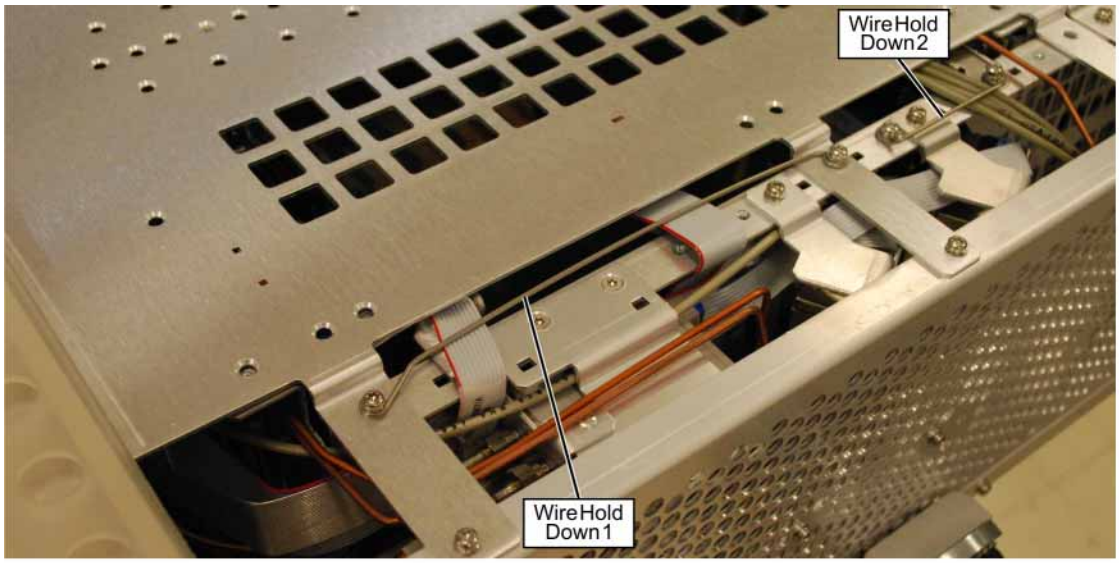

cable_hold_downs

7. Remove cables W32, W33, W35 (Opt BBA), W36, W37, W39, and W47 from the Reference assembly.
8. The reference assembly can be removed from the chassis by using the ejectors to pull the board up out of the chassis.

Replacement

1. Slide the reference assembly into slot 2 in the chassis and press down to plug it into the motherboard using the ejectors to push into place.
2. Refer to Figure 18-82. Reinstall the two screws (0515-0372) to attach wire hold down 2 to the chassis and the screw on the other side attaching the Reference board to the chassis. Torque to 9 inch-pounds.
3. Refer to Figure 18-81. Replace cables W3, W18, W31, W32, W33, W35 (Opt BBA), W36, W37, W39, and W47 to the correct locations. Torque the semi-rigid cables to 10 inch-pounds.
4. Replace the top brace. Refer to the Top Brace and Power Supply Bracket replacement procedure.
5. Replace the instrument outer case. Refer to the Instrument Outer Case replacement procedure.

Table 18-18

Item	Keysight Part Number
W3	N9020-20023 (Options 503, 508, 513, 526) N9020-20072 (Options 544, 550)
W18	N9020-20022
W31	N9020-20021

Option B1X

Removal

1. Remove the instrument outer case. Refer to the Instrument Outer Case removal procedure.
2. Remove the top brace. Refer to the Top Brace and Power Supply Bracket removal procedure.
3. Refer to Figure 18-83. Locate the Wideband Analog IF and Wideband Digital IF assemblies.

Figure 18-83 Assembly Locations

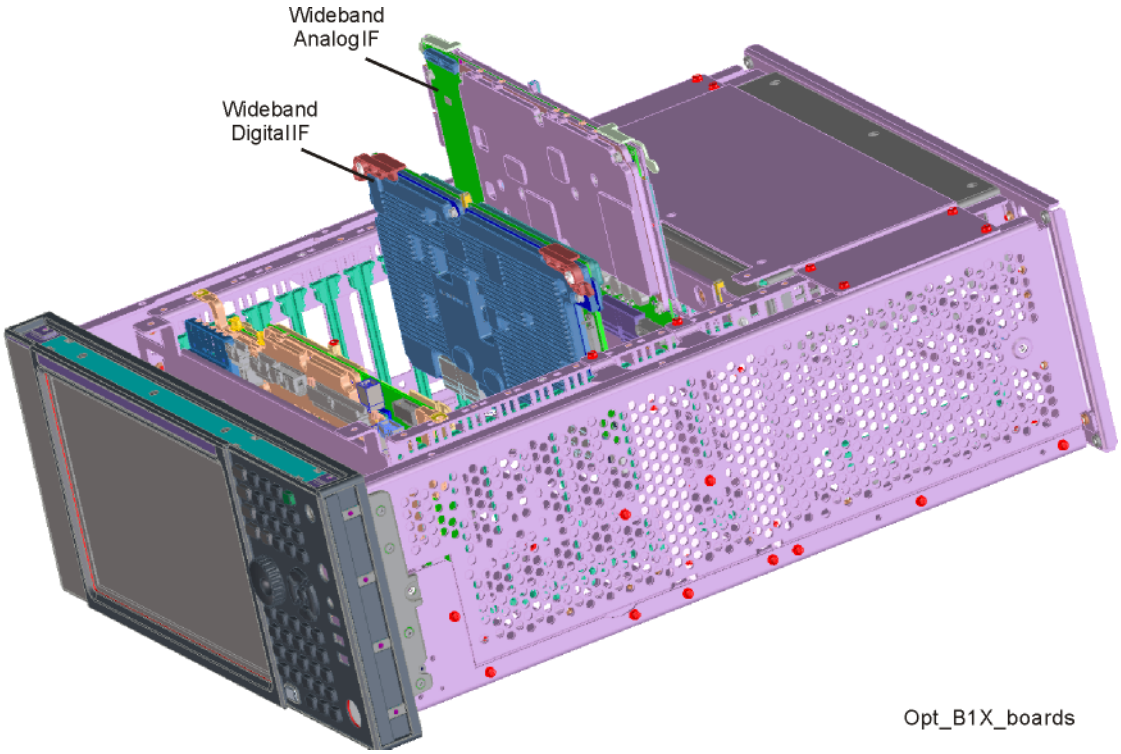

4. Refer to Figure 18-84. Remove cables W34, W40, W41, W45, and W46 from the Wideband Analog IF assembly **(2)**.
5. Remove ribbon cables W44.

Figure 18-84 Option B1X Cables

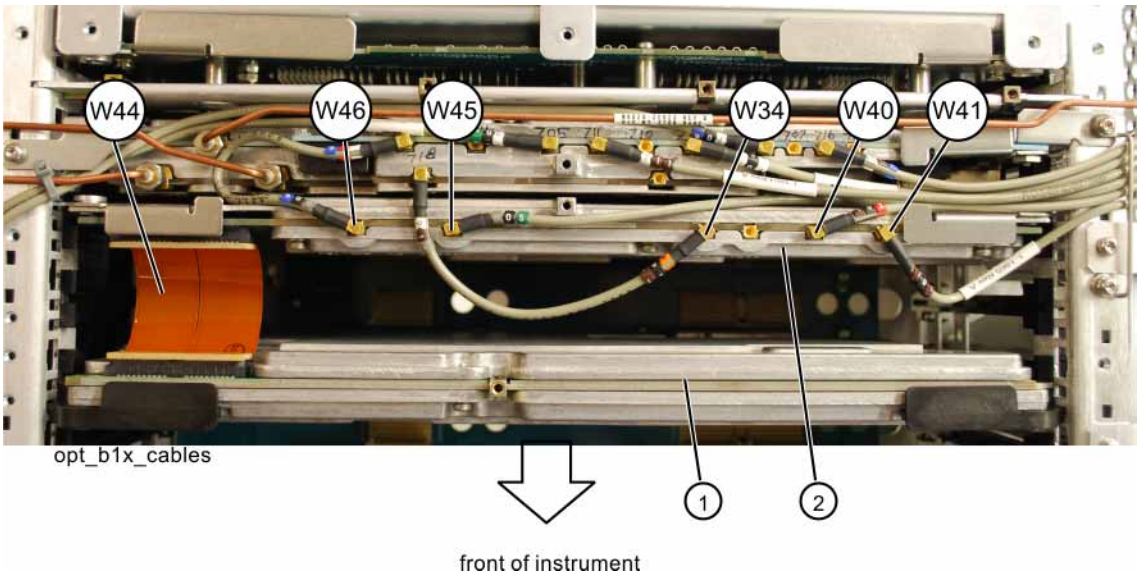

6. The Wideband Analog IF **(2)** and Wideband Digital IF **(1)** assemblies can now be removed by pulling up on the ejectors to remove from the chassis.

Replacement

1. Slide the Wideband Analog IF assembly into slot 3 in the chassis and use the ejectors to push into place into the motherboard.
2. Slide the Wideband Digital IF assembly into slot 5 in the chassis and use the ejectors to push into place into the motherboard.
3. Refer to Figure 18-84. Reinstall cables W34, W40, W41, W45, and W46 to the Wideband Analog IF assembly **(2)**.
4. Reconnect ribbon cable W44.
5. Replace the top brace. Refer to the Top Brace and Power Supply Bracket replacement procedure.
6. Replace the instrument outer case. Refer to the Instrument Outer Case replacement procedure.

Option BBA

Removal

1. Remove the instrument outer case. Refer to the Instrument Outer Case removal procedure.
2. Remove the top brace. Refer to the Top Brace and Power Supply Bracket removal procedure.
3. Refer to Figure 18-85. Locate the A19 BBIQ Main Board assembly.

Figure 18-85 Assembly Locations

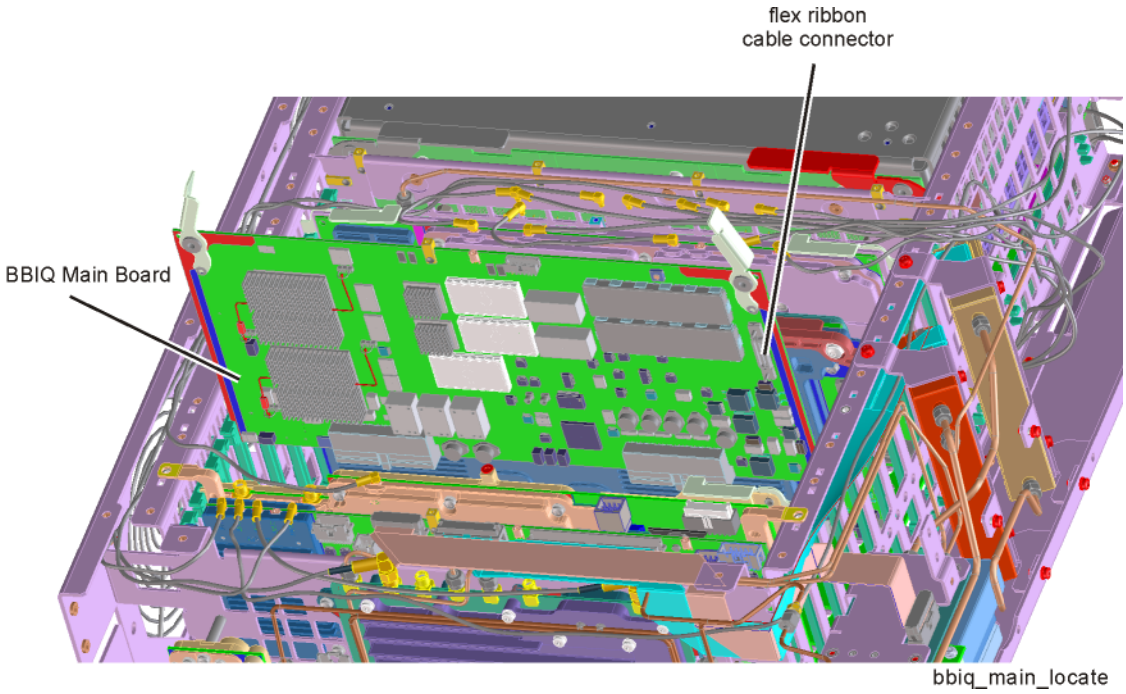

4. Pull up on the ejectors of the BBIQ Main Board assembly to partially lift it from the chassis. Remove the flex ribbon cable.

Replacement

1. Slide the BBIQ Main Board assembly into position in the chassis and reattach the flex cable. Use the ejectors to push the board into place into the motherboard.
2. Replace the top brace. Refer to the Top Brace and Power Supply Bracket replacement procedure.
3. Replace the instrument outer case. Refer to the Instrument Outer Case replacement procedure.

Midplane Board

Removal

1. Remove the instrument outer case. Refer to the Instrument Outer Case removal procedure.
2. Remove the top brace and power supply bracket. Refer to the Top Brace and Power Supply Bracket removal procedure.
3. Refer to Figure 18-86. Locate the Midplane board **(4)**.

Figure 18-86 Assembly Locations

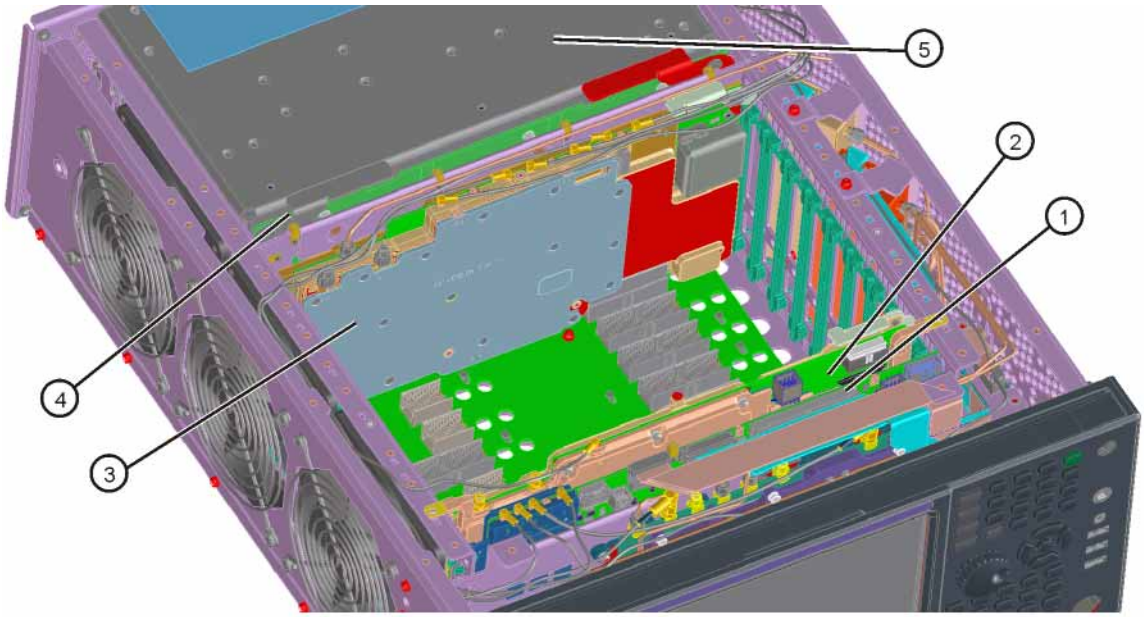

assy_locations_pxa

4. Remove the processor assembly. Refer to the CPU Assembly removal procedure.
5. Remove the rear panel. Refer to the Rear Panel removal procedure.
6. Remove the power supply assembly. Refer to the Power Supply Assembly removal procedure.

7. Refer to Figure 18-87. Remove the six screws **(2)** (0515-0375) attaching the midplane board **(1)** to the midplane bracket. The midplane board can now be pulled up from the chassis by use of the ejectors.

Figure 18-87 Midplane Board Assembly Removal

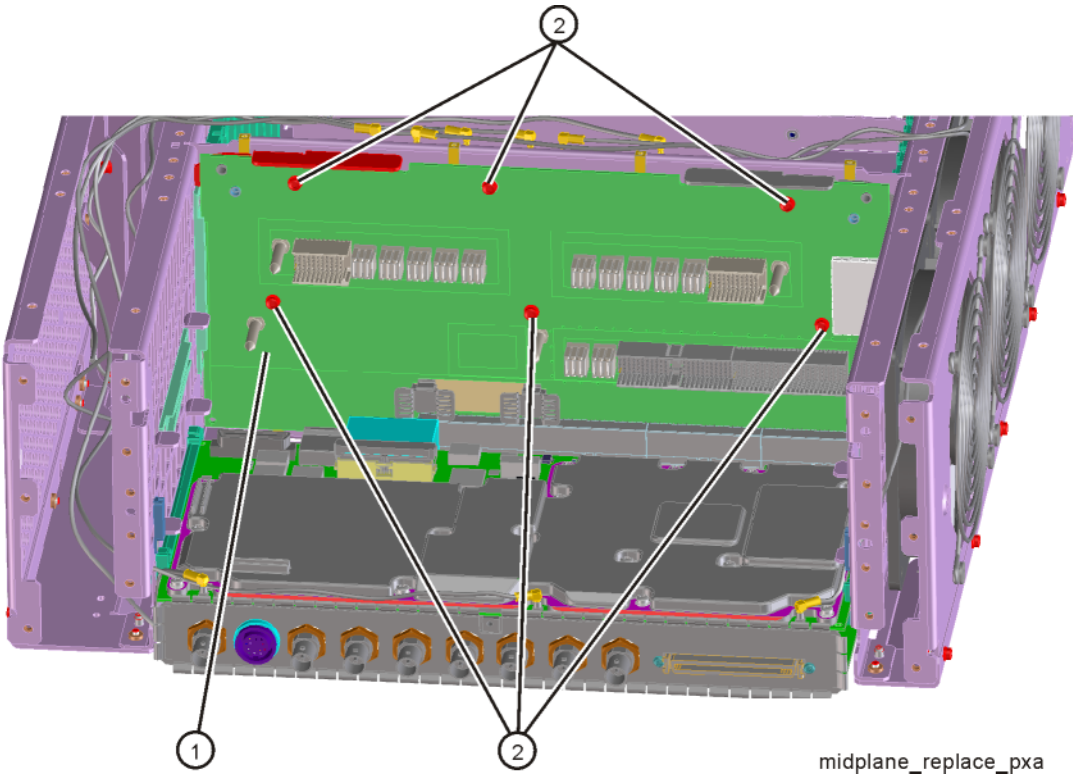

Replacement

1. Refer to Figure 18-87. Install the midplane assembly into the chassis using the ejectors and attach to the midplane bracket using the six screws (0515-0375) removed earlier. Torque to 9 inch-pounds.
2. Replace the power supply assembly. Refer to the Power Supply Assembly replacement procedure.
3. Replace the rear panel. Refer to the Rear Panel replacement procedure.
4. Replace the processor assembly. Refer to the CPU Assembly replacement procedure.
5. Replace the top brace. Refer to the Top Brace and Power Supply Bracket replacement procedure.
6. Replace the instrument outer case. Refer to the Instrument Outer Case replacement procedure.

Rear Panel

Removal

1. Remove the instrument outer case. Refer to the Instrument Outer Case removal procedure.
2. Refer to Figure 18-88. Remove W37 **(2)** cable from the rear panel using the 9/16- inch nut driver. Remove W27 **(3)** cable using the 5/16-inch wrench.
3. Using the T-10 driver, remove the sixteen screws **(4)** (0515-0372) attaching the rear panel **(1)** to the chassis. The rear panel can now be removed.

Figure 18-88 Rear Panel Removal

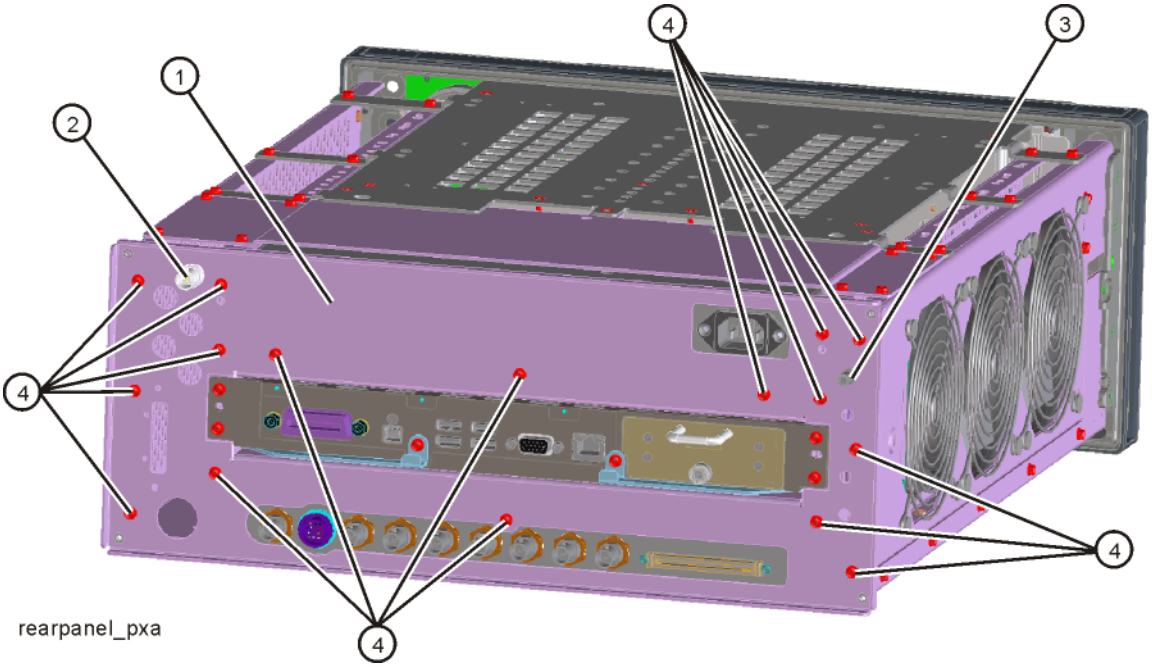

Replacement

1. Reattach the W37 cable to the rear panel. Torque to 21 inch-pounds using the 9/16-inch nut driver.
2. Reattach the W27 cable to the rear panel. Torque to 10 inch-pounds using the 5/16-inch wrench.
3. Place the rear panel into position in the chassis. Replace the sixteen screws (0515-0372) to attach the rear panel to the chassis. Torque to 9 inch-pounds.
4. Replace the instrument outer case. Refer to the Instrument Outer Case replacement procedure.

Power Supply Assembly

Removal

1. Remove the instrument outer case. Refer to the Instrument Outer Case removal procedure.
2. Remove the rear panel. Refer to the Rear Panel removal procedure.
3. Refer to Figure 18-89. Remove the three screws **(1)** (0515-1946) attaching the power supply to the chassis.
4. The power supply assembly can be removed from the chassis by pulling straight out the back.

Figure 18-89 Power Supply Assembly Removal

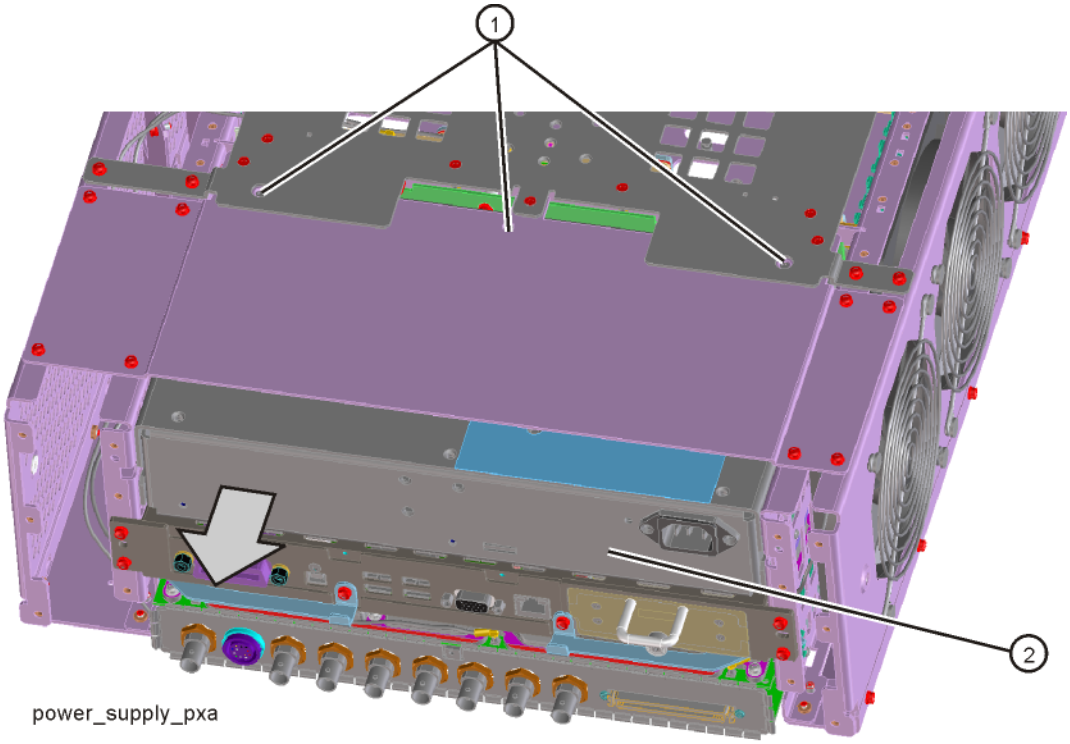

Replacement

1. Slide the power supply assembly into the slot at the rear of the instrument and push on the assembly to mate the connectors to the midplane assembly.
2. Refer to Figure 18-89. Replace the three screws **(1)** (0515-1946) through the power supply bracket and into the power supply. Torque to 9 inch-pounds.
3. Replace the rear panel. Refer to the Rear Panel replacement procedure.
4. Replace the instrument outer case. Refer to the Instrument Outer Case replacement procedure.

CPU Assembly

Removal

1. Refer to Figure 18-90. Remove the six screws **(1)** (0515-0372) attaching the CPU assembly to the chassis.
2. The CPU assembly can be removed from the chassis by pulling straight out the back. Use the two ejectors to pull the CPU assembly out from the chassis.

NOTE If the A4BT1 CPU board battery is being changed, refer to Chapter 19, “Post-Repair Procedures,” for setup instructions.

WARNING Danger of explosion if battery is incorrectly replaced. Replace only with the same or equivalent type recommended. Discard used batteries according to manufacturer's instructions.

Figure 18-90 CPU Assembly Removal

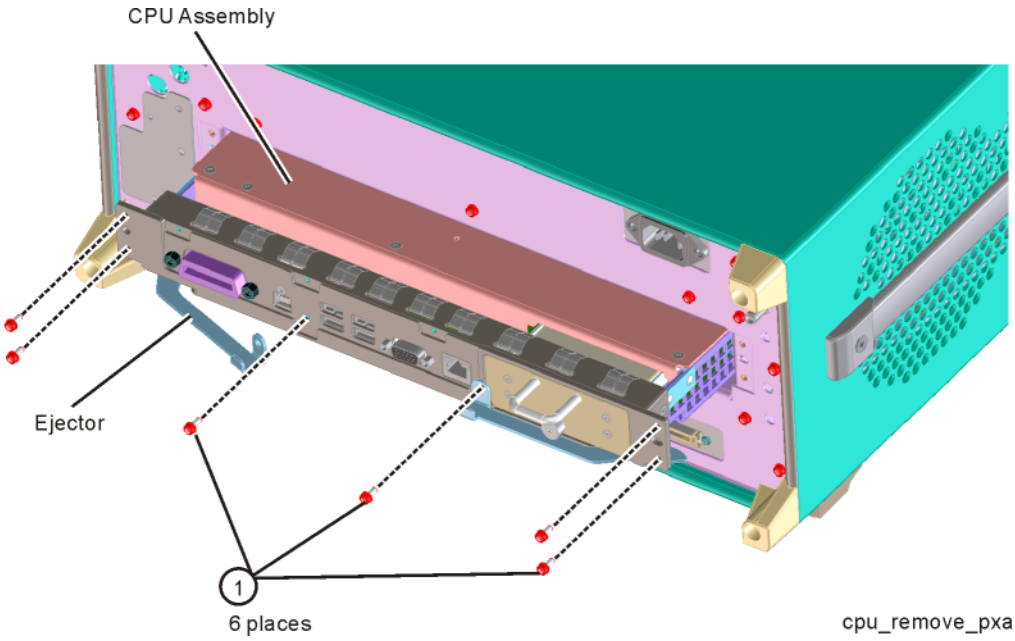

Replacement

1. Slide the CPU assembly into the slot at the rear of the instrument and push on the assembly to mate the connectors to the midplane assembly. Secure the board with the ejectors.
2. Refer to Figure 18-90. Replace the six screws **(1)** (0515-0372) that attach the CPU assembly to the chassis. Torque to 9 inch-pounds.

Disk Drive

CAUTION Electrostatic discharge (ESD) can damage or destroy electronic components. All work on electronic assemblies should be performed at a static-safe workstation. Refer to the documentation that pertains to your instrument for information about static-safe workstations and ordering static-safe accessories.

Drive Removal and Replacement

1. Turn the instrument off and remove the AC power cord.
2. Before replacing the A5 disk drive it is highly recommended that the factory calibration data be backed up to an external drive if at all possible. If this data is not backed up prior to replacing the disk drive all instrument adjustments and performance verification tests will need to be run after the drive is replaced.

   For information on how to backup this data see the "Calibration Data Backup and Restore" section in Chapter 19, "Post-Repair Procedures." of this manual.

   If this data cannot be backed up because the instrument will not fully boot, go ahead and change the A5 Disk Drive and perform all adjustments listed in Chapter 19, "Post-Repair Procedures." for the A5 assembly.

3. Refer to Figure 18-91. Locate and remove the existing disk drive carrier assembly **(2)** from the instrument by loosening the rear panel screw **(1)**.

Figure 18-91 Removing the Disk Drive Carrier Assembly

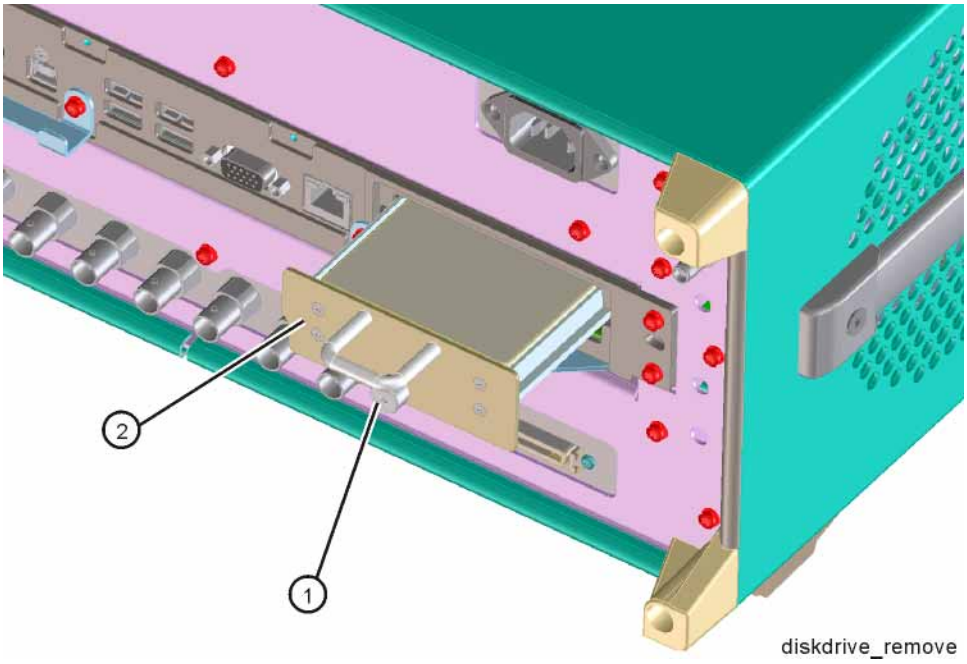

4. Refer to Figure 18-92. Remove the 4 machine screws **(1)** (0515-0372) from the disk drive carrier assembly that secure the drive **(2)**.

Figure 18-92 Disk Drive Screws

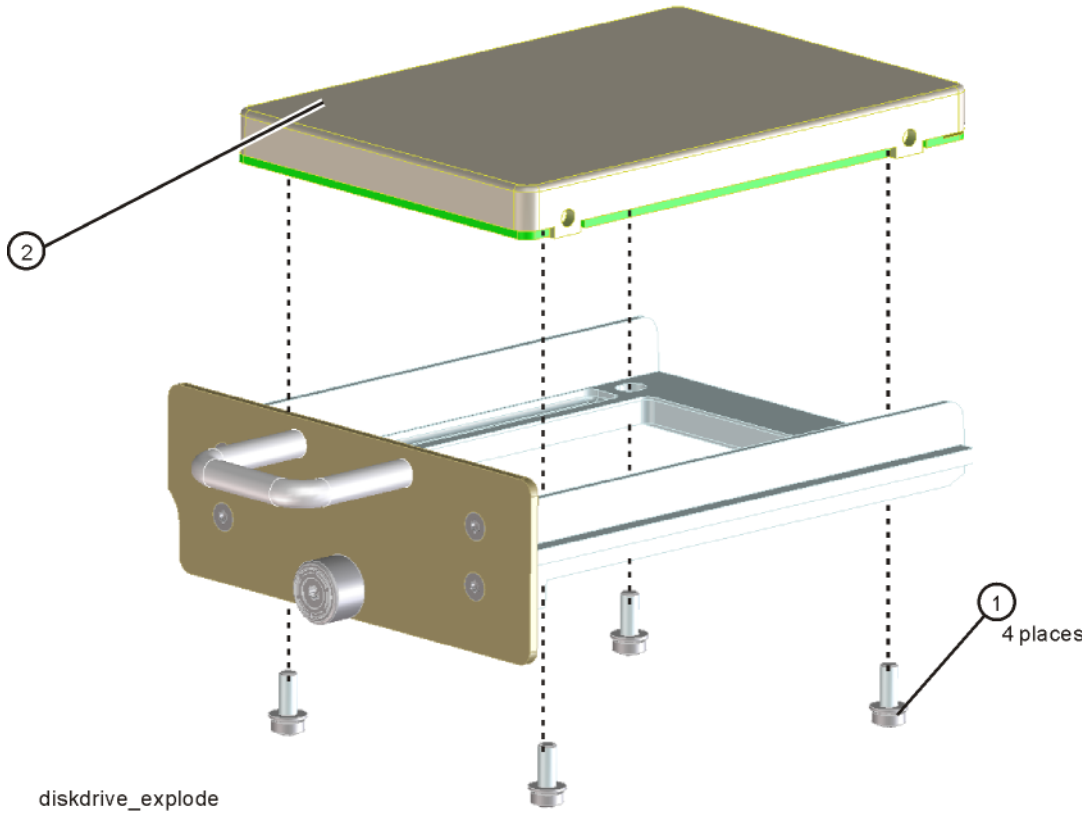

5. Remove the disk drive **(2)** from the carrier assembly.
6. Place the new disk drive onto the carrier assembly and attach with the 4 machine screws **(1)** (0515-0372). Torque to 9 in-pounds.
7. Refer to Figure 18-91. Replace the disk drive carrier assembly **(2)** into the instrument and tighten the screw to 9 in-pounds.
8. Refer to Chapter 19, “Post-Repair Procedures.” and perform all of the specified tasks for replacing the A5 Disk Drive assembly.

Disk Drive Interconnect

Removal

1. Remove the A5 Disk Drive assembly for the instrument. Refer to the "Disk Drive" removal procedure.
2. Remove the A4 CPU assembly from the instrument. Refer to the "CPU Assembly" removal procedure.
3. Refer to Figure 18-93. Remove the A4 CPU assembly cover **(1)** by first removing the 19 flat-head screws **(2)** (0515-1227) and 3 pan-head screws **(3)** (0515-0372).

Figure 18-93 A4A1 Disk Drive Interconnect Board Removal

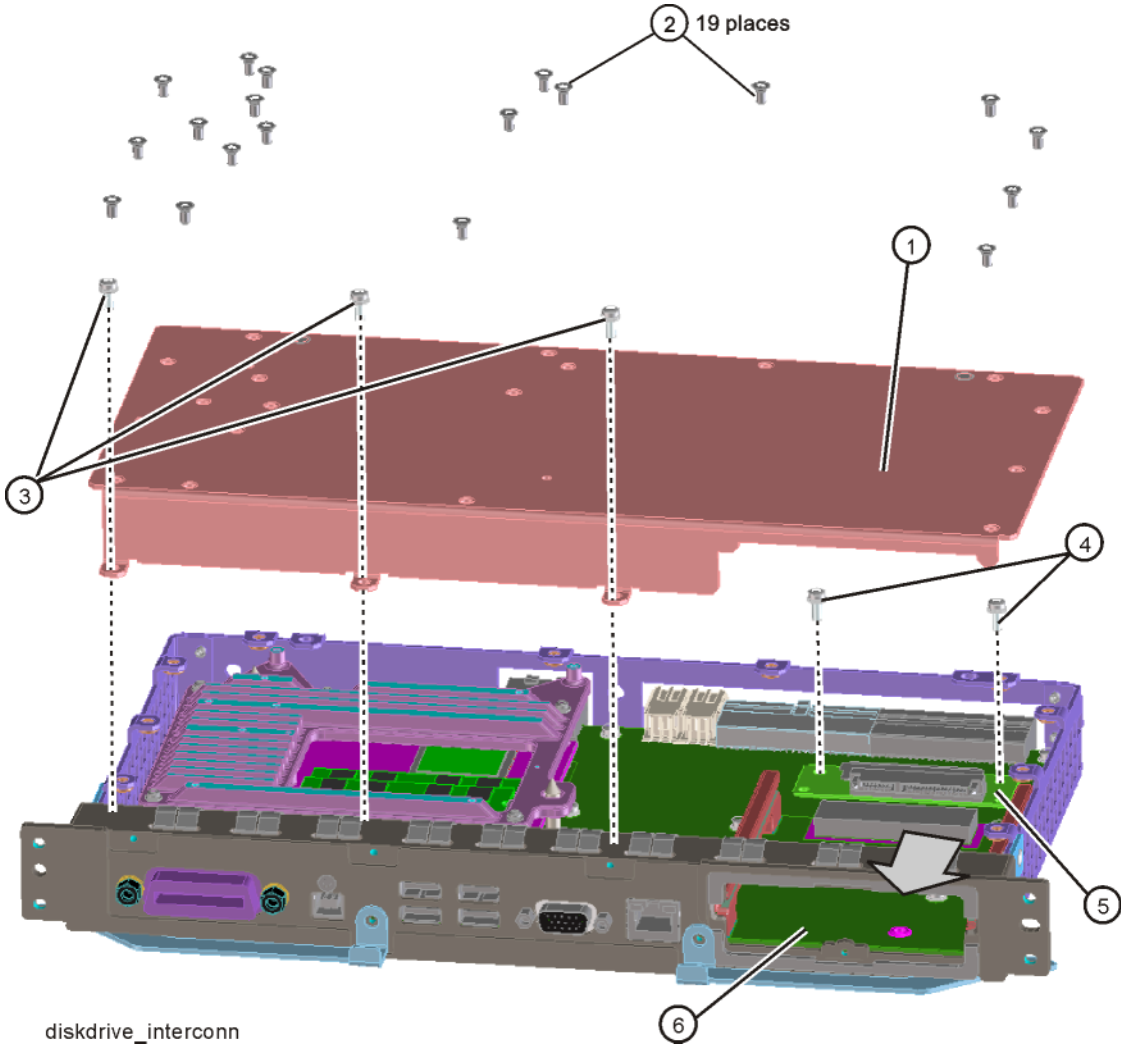

4. Remove the 2 screws **(4)** (0515-0372) that attached the A4A1 Disk Drive Interconnect board **(5)** to the A4 CPU assembly.
5. Unplug and remove the A4A1 Disk Drive Interconnect board from the A4 CPU assembly by pulling the board towards the disk drive bay opening **(6)** to disengage the connector.

Installation

1. Refer to Figure 18-93. Plug the A4A1 Disk Drive Interconnect board **(5)** into the A4 CPU assembly by carefully sliding it into place from the disk drive bay opening **(6)**.
2. Install the 2 screws **(4)** (0515-0372) that secure the A4A1 Disk Drive Interconnect board to the A4 CPU assembly and torque them to 9 inch-pounds.
3. Replace the A4 CPU assembly cover **(1)** and attach it with the 19 flat-head screws **(2)** (0515-1227) and the 3 pan-head screws **(3)** (0515-0372). Torque all screws to 9 inch-pounds.
4. Re-install the A4 CPU assembly into the instrument. Refer to the CPU Assembly installation procedure.
5. Re-install the A5 Disk Drive assembly into the instrument. Refer to the Disk Drive installation procedure.

AIF/DIF Assembly

Removal

1. Remove the instrument outer case. Refer to the Instrument Outer Case removal procedure.
2. Remove the rear panel. Refer to the Rear Panel removal procedure.
3. Refer to Figure 18-94. Remove cables W26, W39, W42, and W47 from the bottom of the DIF assembly.
4. Refer to Figure 18-95. Pull the AIF/DIF assembly part way out of the chassis. Remove cables W25, W36, and W42 from the AIF assembly.
5. The AIF/DIF assembly can be removed from the chassis by pulling straight out the back.

Figure 18-94 DIF Cables

Figure 18-95 AIF Cables

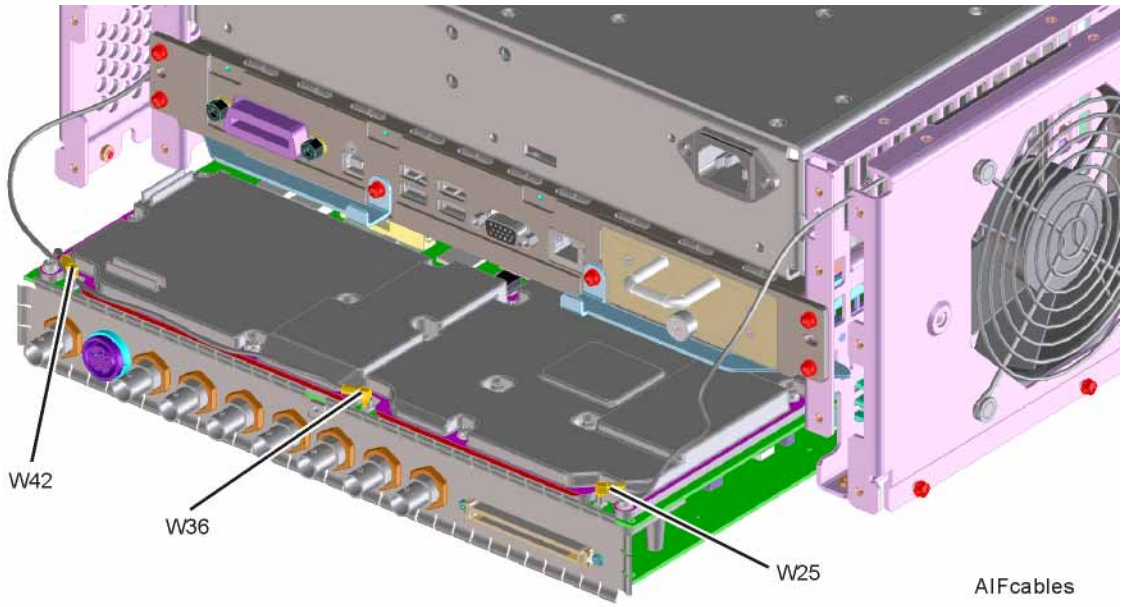

Separate AIF/DIF Assembly

1. To separate the AIF **(1)** from the DIF **(2)**, unplug ribbon cable W43 from the AIF assembly.
2. Refer to Figure 18-96. From underneath the assembly, remove the three screws **(3)** (0515-0372).

Figure 18-96 AIF/DIF Separation

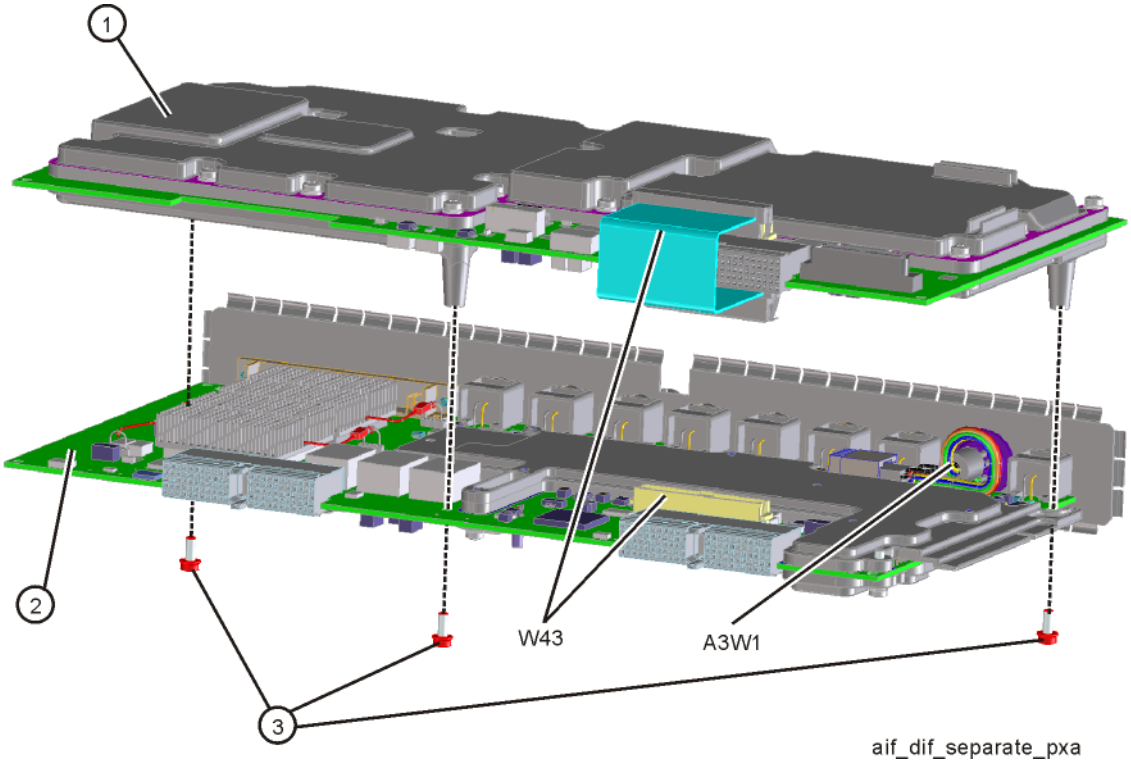

1. To pair the AIF and DIF together again, set the DIF in position over the AIF. Reinstall the three screws (0515-0372) removed before. Torque to 9 inch-pounds, starting with the middle screw.
2. Reconnect the ribbon cable W43.

Replacement

1. Slide the AIF/DIF assembly into the slot at the rear of the instrument and push on the assembly to mate the connectors to the motherboard assembly.
2. Refer to Figure 18-95. Replace cables W25, W36, and W42 to the AIF assembly.
3. Refer to Figure 18-94. Replace cable W26, W39, W42, and W47 to the bottom of the DIF assembly.
4. Replace the rear panel. Refer to the Rear Panel replacement procedure.
5. Replace the instrument outer case. Refer to the Instrument Outer Case replacement procedure.

Wideband Extension Board (Option RTS)

Removal

1. Remove the instrument outer case. Refer to the "Instrument Outer Case" removal procedure.
2. Remove the RF side bracket. Perform step 3 on page page 456.
3. Refer to Figure 18-97. Option B2X instruments will only have one Wideband Digital IF board. Option B5X instruments will have both boards. Unplug the flex circuit cables from each Wideband Digital IF board. Remove the four screws **(1)** attaching the Wideband Extension assembly **(2)** to the chassis. The A28 Wideband Extension assembly can now be removed from the chassis.

Figure 18-97 Wideband Extension Board Removal

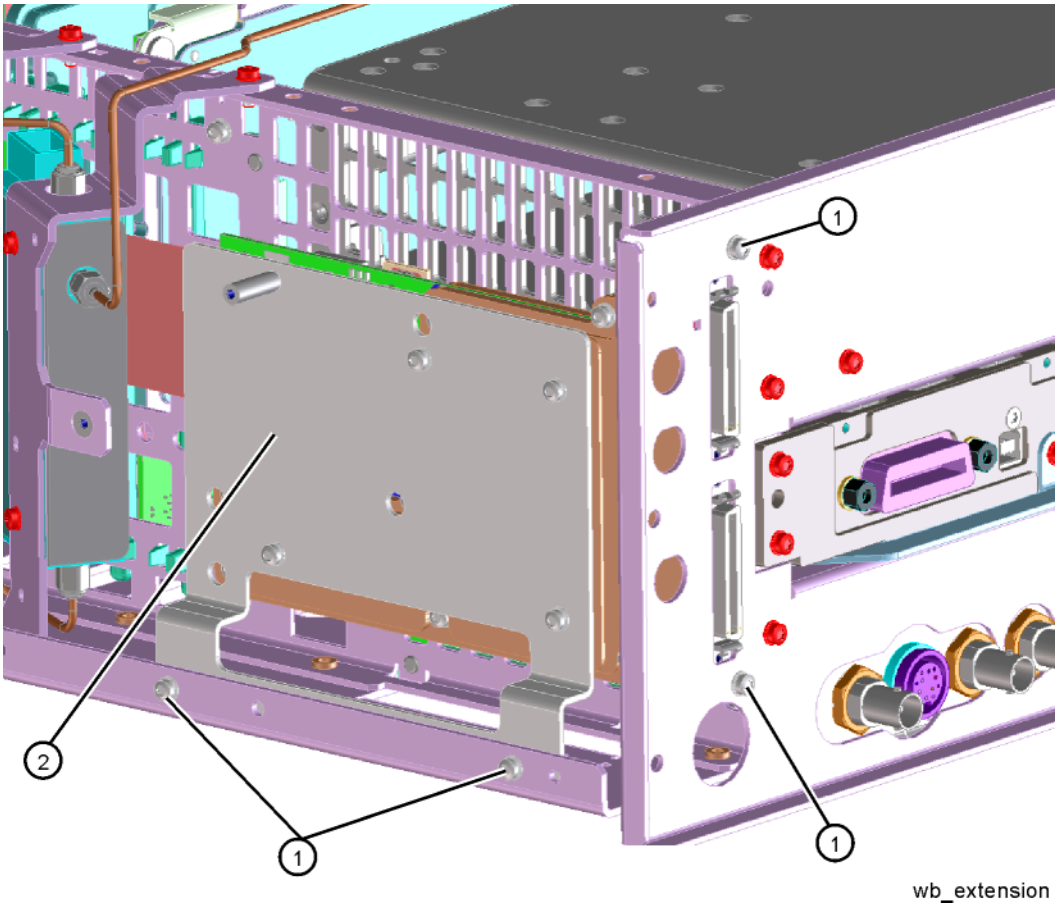

4. Refer to Figure 18-98. To separate the bracket **(2)** from the Wideband Extension board, remove the four screws **(1)** (0515-0372).

Figure 18-98 Wideband Extension Board and Bracket Separation

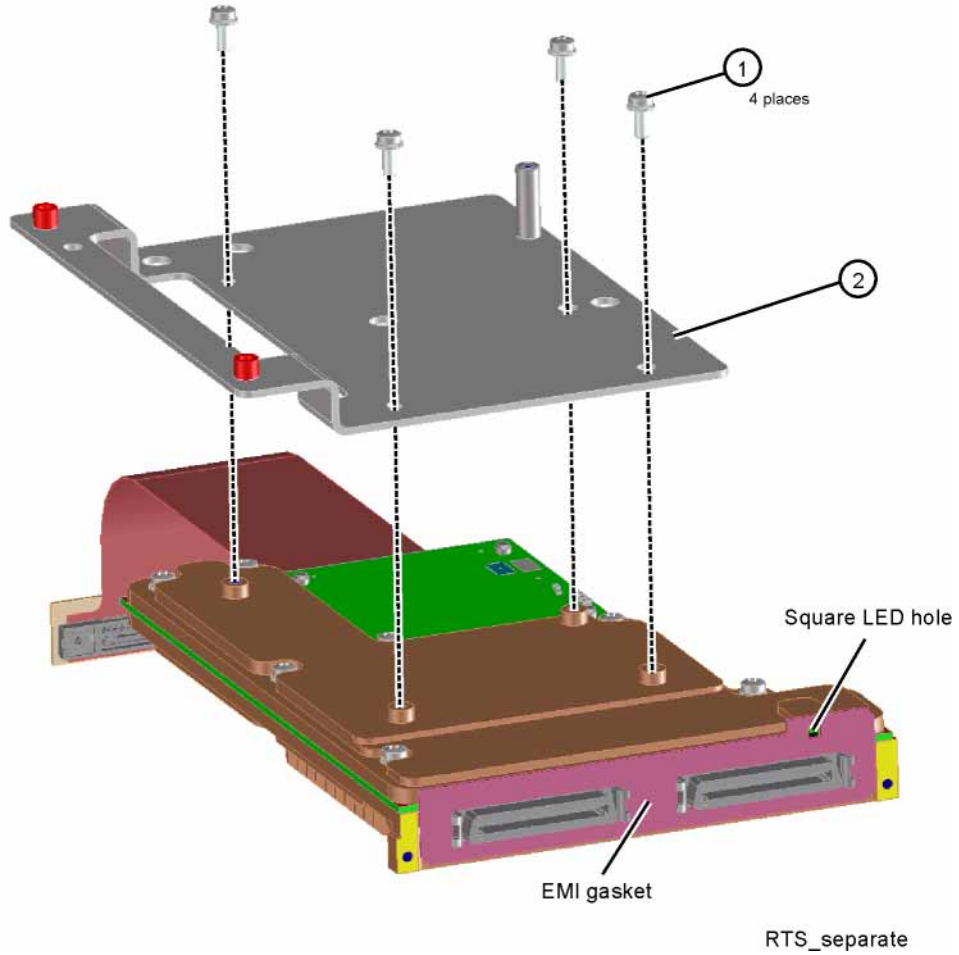

5. Attach the bracket to the new Wideband Extension board with the four screws. Torque to 9 inch-pounds.
6. Remove the flex circuit cable(s) from the old board and attach to the new Wideband Extension board, taking care to connect them to the same connectors as the old board. Refer to Figure 18-99. Option B2X instruments will have one flex cable. Option B5X instruments will have two flex cables.
7. When replacing the EMI gasket, notice the gasket has a small square hole and needs to be aligned with the square hole on the Wideband Extension Board casting. There is an LED in the casting, and the small square hole allows the LED to be visible from the rear panel.

   The gasket is fragile. Carefully peel off the backing from the gasket and apply the sticky side of the gasket over the two Wideband Extension board connectors.

Replacement

1. Refer to Figure 18-97. Place the W28 Wideband Extension board into the chassis in the position shown. Route the flex circuit cables behind the attenuators. Attach the board to the chassis with the four screws **(1)**. Torque to 9 inch-pounds.
2. Refer to Figure 18-99. Connect the flex circuit cables to the Wideband Digital boards in the card cage. If the instrument has only one WB DIF board, connect the flex circuit cable from the Wideband Extension J1 to the connector on the WB Digital IF assembly.

   If the instrument has two WB Digital IF boards, connect the flex circuit attached to the Wideband Extension J2 (J2 is connector is on the edge of the Wideband Extension) to the front WB Digital IF board in the card cage. Connect the other flex circuit from the WB Digital IF Extension J1 to the rear WB Digital IF board in the card cage.

Figure 18-99 Wideband Extension Board Connectors

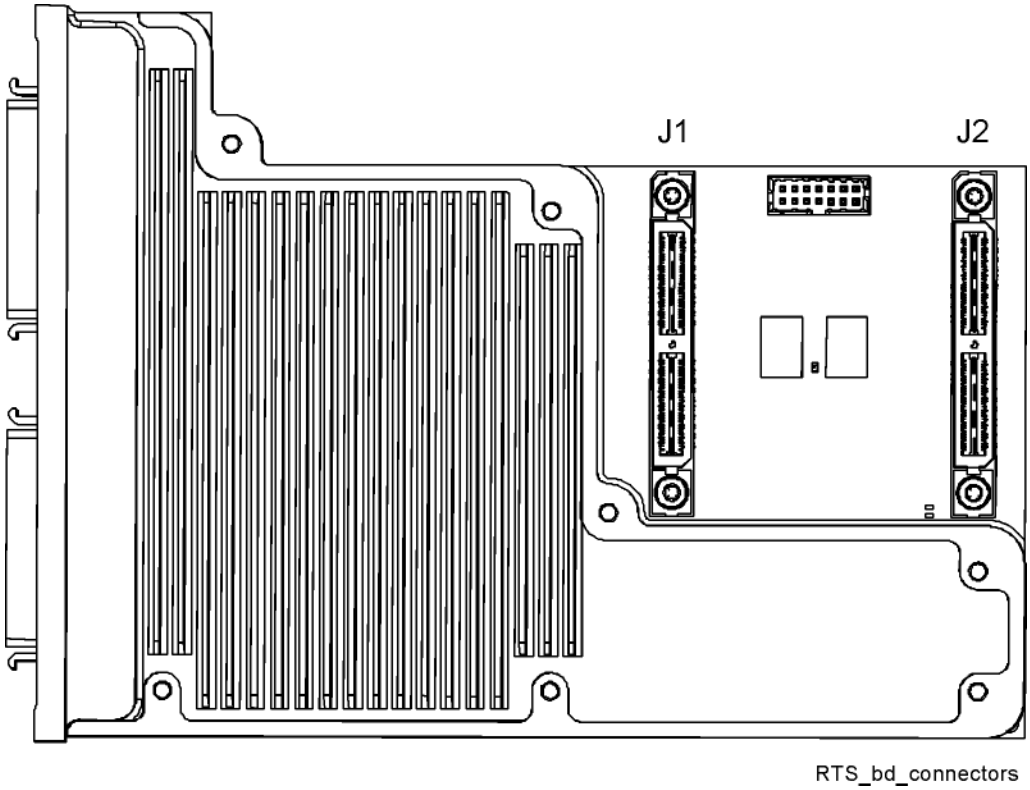

3. Replace the RF panel as described on page page 456.
4. Replace the top brace. Refer to the "Top Brace and Power Supply Bracket" replacement procedure.
5. Replace the instrument outer case. Refer to the "Instrument Outer Case" replace procedure.

Motherboard Assembly

Removal

1. Remove the instrument outer case. Refer to the Instrument Outer Case removal procedure.
2. Remove the rear panel. Refer to the Rear Panel removal procedure.
3. Remove the top brace and power supply bracket. Refer to the Top Brace and Power Supply Bracket removal procedure.
4. Remove the Front Frame Assembly. Refer to the Front Frame Assembly removal procedure.
5. Remove the reference assembly. Refer to the Reference Assembly removal procedure.
6. If Option B1X is present in the instrument, remove the two option boards.
7. Remove the CPU assembly. Refer to the CPU Assembly removal procedure.
8. Remove the power supply assembly. Refer to the Power Supply Assembly removal procedure.
9. Remove the AIF/DIF assembly. Refer to the AIF/DIF Assembly removal procedure.
10. Remove the Front End Controller. Refer to the Front End Controller removal procedure.
11. Remove the LO Synthesizer assembly. Refer to the LO Synthesizer Assembly removal procedure.
12. Remove the Midplane assembly. Refer to the Midplane Board removal procedure.
13. Remove the RF bracket. Refer to Figure 18-18 on page 456.
14. Remove the fan assembly. Refer to the Fan Assembly removal procedure.
15. Refer to Figure 18-100 and Figure 18-101. Remove the midplane bracket **(1)** by removing the eight screws **(2)** (0515-0372) (two on each side and four on the bottom).

Figure 18-100 Midplane Bracket Removal

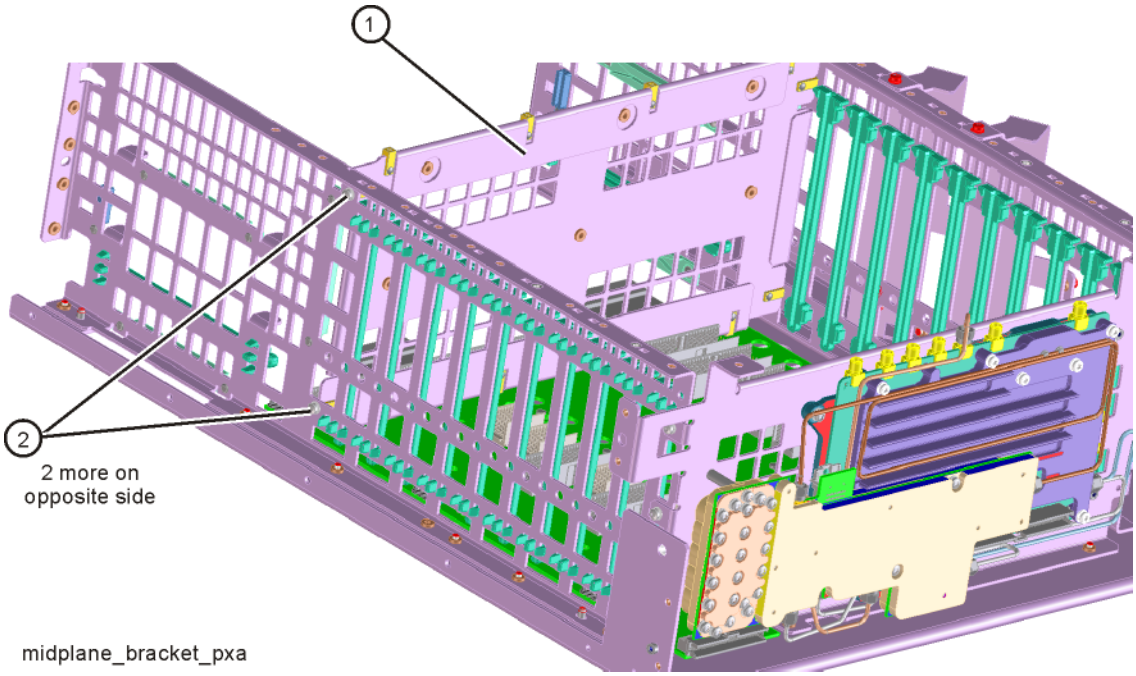

Figure 18-101 Bottom Screws

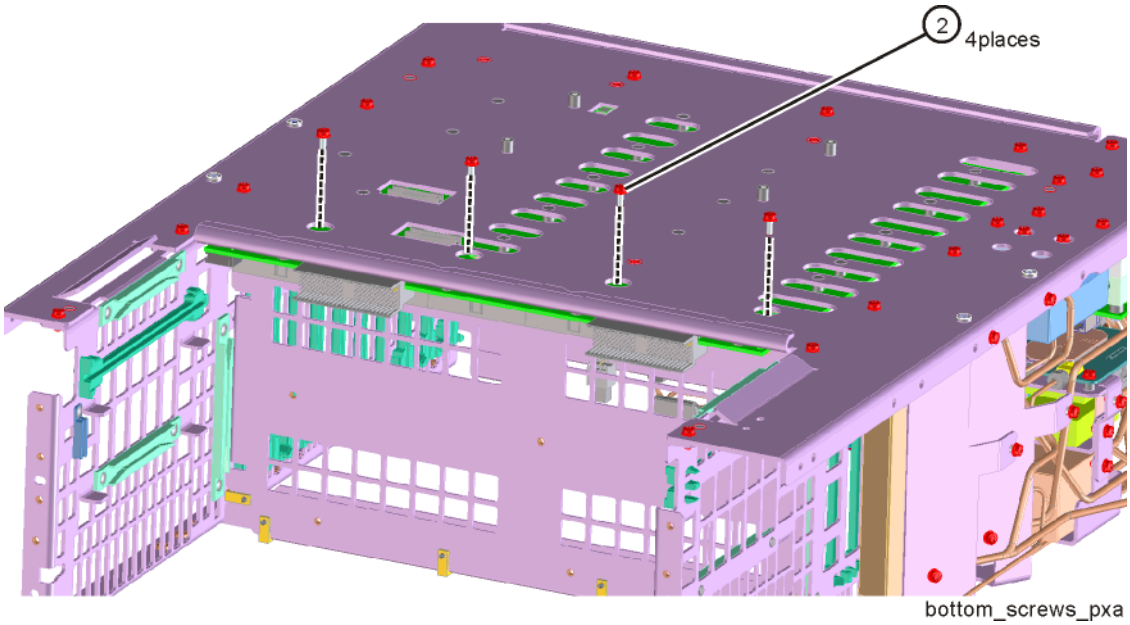

16. Refer to Figure 18-102. Remove the left side chassis **(1)** (same side as the fan) by removing the nine screws **(2)** (0515-0372) (six on the bottom).

Figure 18-102 Chassis Side Removal

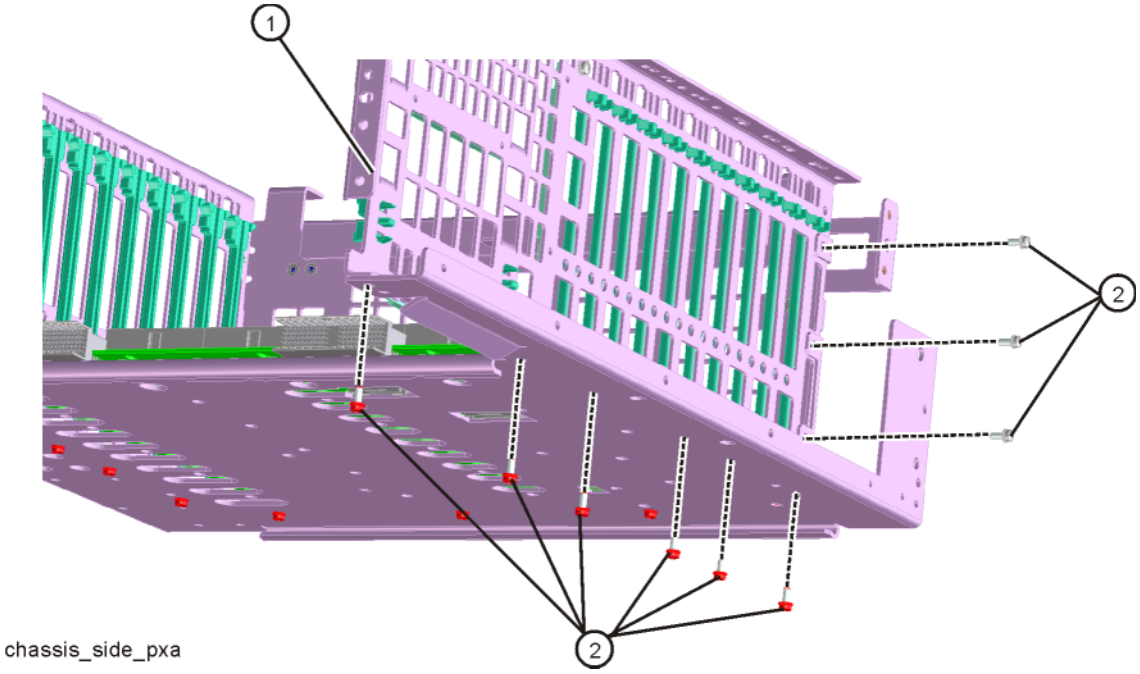

17. Refer to Figure 18-103. Remove the motherboard **(1)** by removing the four screws **(2)** (0515-0372). Slide the motherboard back off the standoffs and lift it up and out.

Figure 18-103 Motherboard Assembly Removal

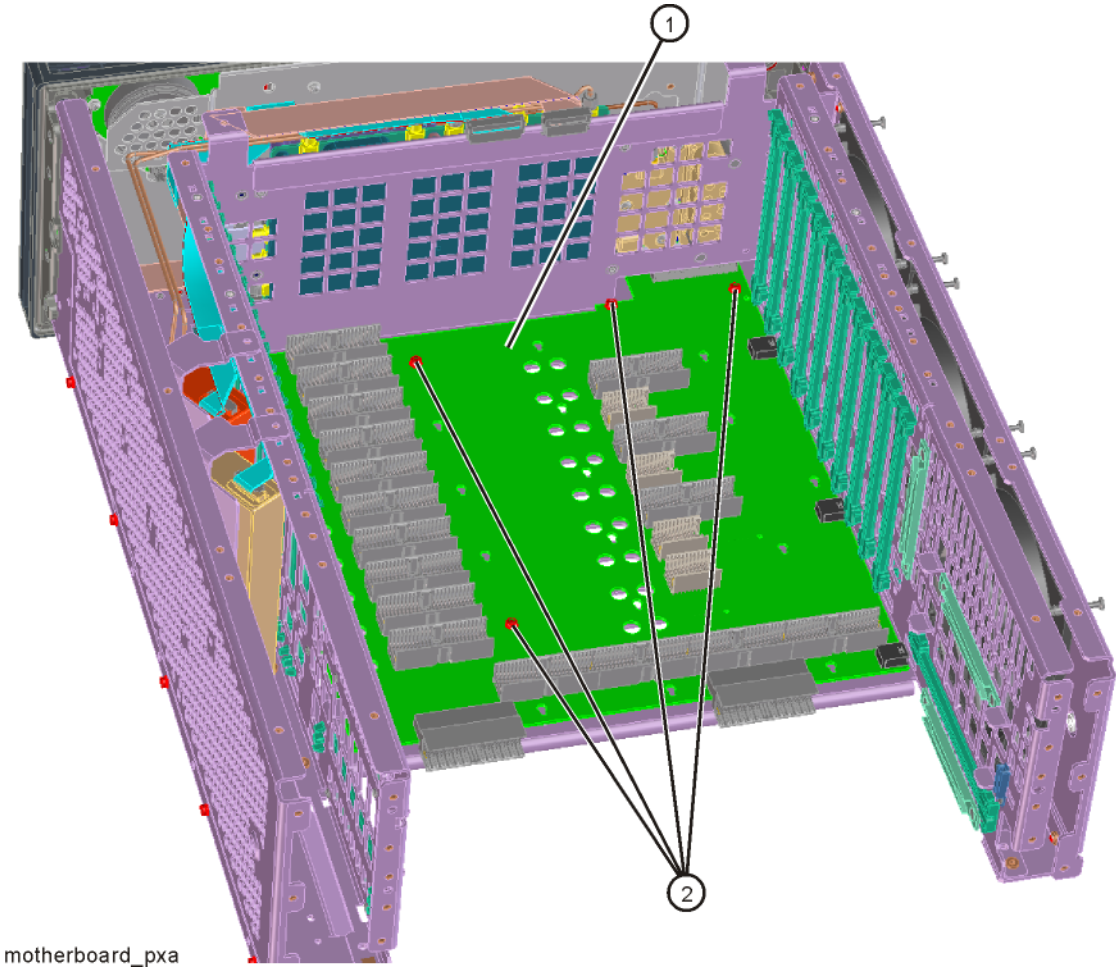

Replacement

1. Refer to Figure 18-103. Place the motherboard **(1)** on standoffs and slide into position in the chassis and replace the four screws **(2)** (0515-0372). Torque to 9 inch-pounds.
2. Refer to Figure 18-102. Replace the left side chassis by replacing the nine screws (0515-0372). Torque to 9 inch-pounds.
3. Refer to Figure 18-100. Replace the midplane bracket **(1)** by replacing the eight screws **(2)** (0515-0372). Torque to 9 inch-pounds.
4. Replace the fan assembly. Refer to the Fan Assembly replacement procedure.

5. Replace the Midplane assembly. Refer to the Midplane Board replacement procedure.
6. Replace the Front End Controller. Refer to the Front End Controller replacement procedure.
7. Replace the LO Synthesizer assembly. Refer to the LO Synthesizer Assembly replacement procedure.
8. Replace the AIF/DIF assembly. Refer to the AIF/DIF Assembly replacement procedure.
9. Replace the CPU assembly. Refer to the CPU Assembly replacement procedure.
10. Replace the power supply assembly. Refer to the Power Supply Assembly replacement procedure.
11. Replace the reference assembly. Refer to the Reference Assembly replacement procedure.
12. Replace the rear panel. Refer to the Rear Panel replacement procedure.
13. If Option B1X is present in the instrument, install the two option boards.
14. Ensure all cables are plugged in or connected and torqued.
15. Replace the RF bracket. Refer to Figure 18-18 on page 456. Torque the screws to 9 inch-pounds.
16. Replace the Front Frame Assembly. Refer to the Front Frame Assembly replacement procedure.
17. Replace the top brace and reference bracket. Refer to the Top Brace and Power Supply Bracket replacement procedure.
18. Replace the instrument outer case. Refer to the Instrument Outer Case replacement procedure.

Fan Assembly

Removal

1. Remove the instrument outer case. Refer to the Instrument Outer Case removal procedure.
2. Remove the top brace. Refer to the Top Brace and Power Supply Bracket removal procedure.
3. Remove the Front Frame Assembly. Refer to the Front Frame Assembly removal procedure.
4. Refer to Figure 18-104. Remove the twelve remaining screws **(1)** (0515-0372) that attach the fan assembly to the chassis.

Figure 18-104 Fan Assembly Removal

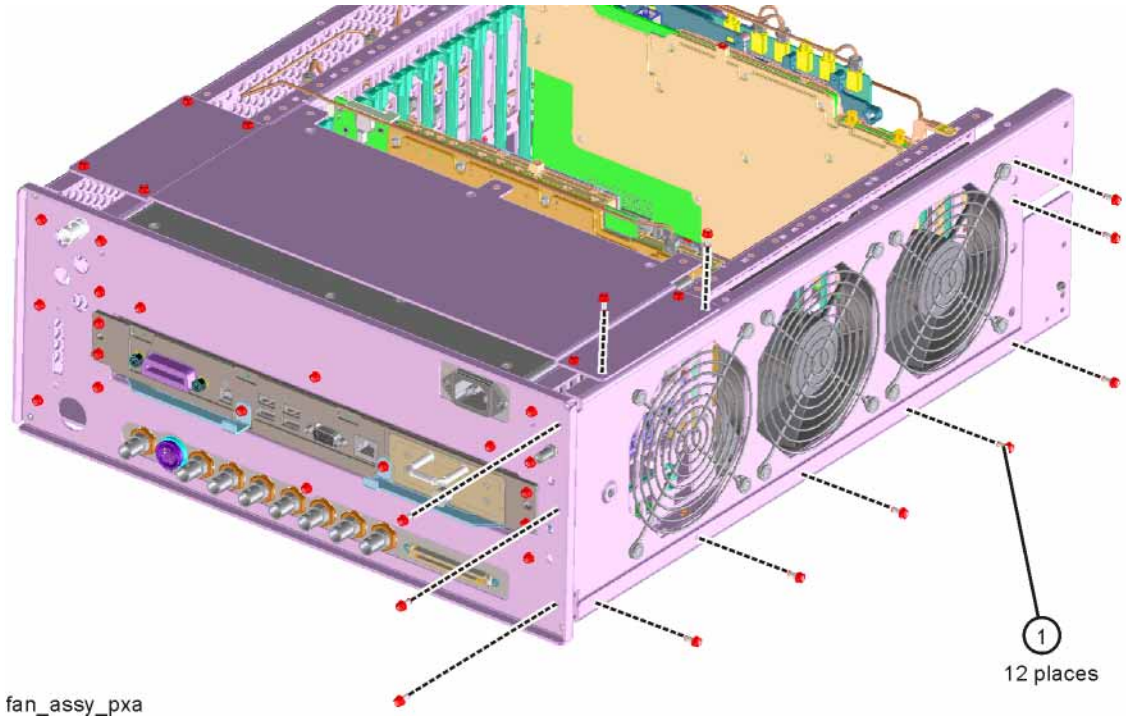

5. Refer to Figure 18-105. Unplug the fan wires from the motherboard. The fan assembly can now be lifted from the chassis.

Figure 18-105 Fan Wires

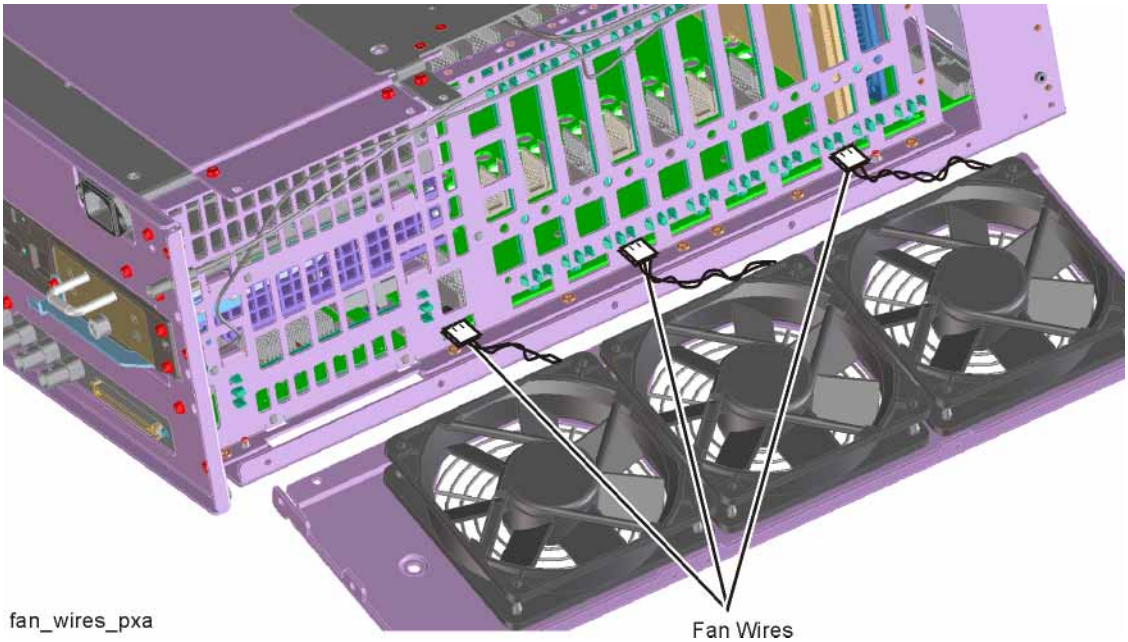

Replacing a Fan

1. Refer to Figure 18-106. To replace a fan, it is necessary to remove the 4 plastic rivets **(3)** (0361-1272) that attach the fan **(1)** and guard **(2)** to the fan bracket. To do this use a small screwdriver to unscrew the rivet and remove it from the bracket. The rivets may need to be cut or pushed out from behind. They are not reusable.

Figure 18-106 Fan Replacement

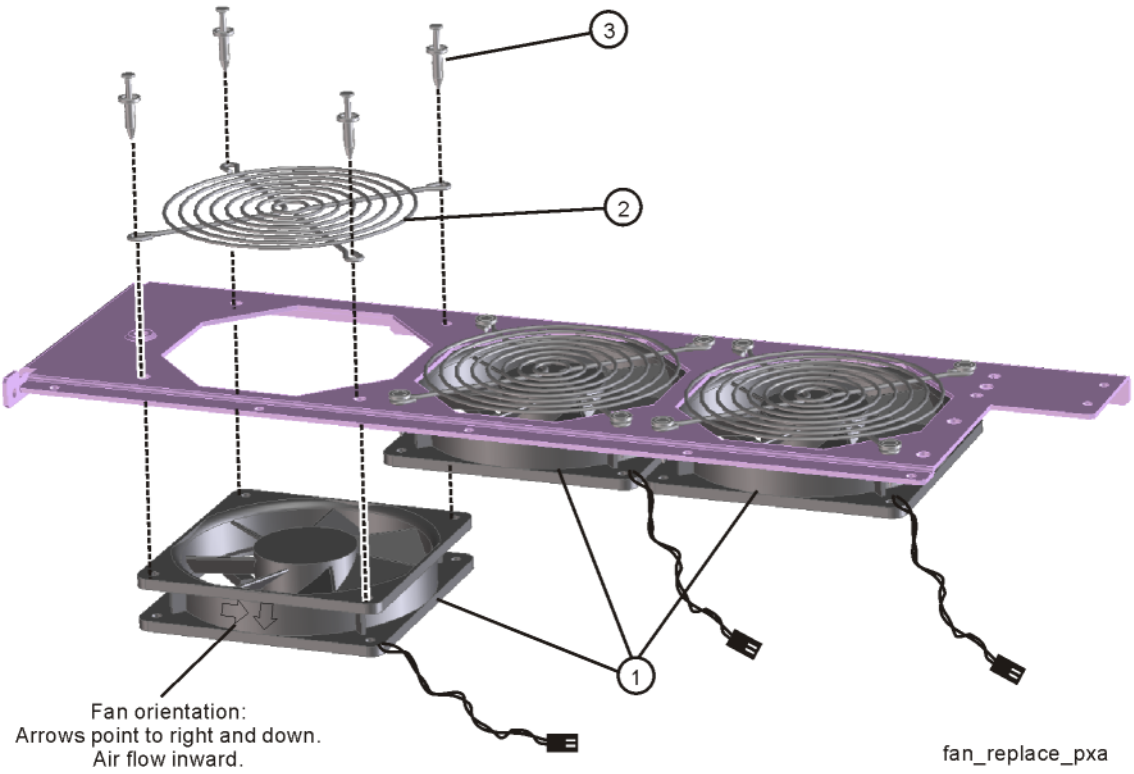

2. Position the new fan on the work surface with the arrows pointing to the right and down.
3. Orient the fan guard so that the rings are on the outside, and that the “V” of the support legs are pointing to the neighboring fan.
4. With the rivets center posts raised, snap the rivets into place through the fan grill and fan bracket and into the fan. Screw the center posts into place. This may require a small hammer or push tool to push the rivets in.

Replacement

1. Plug the fan wires into the motherboard.
2. Refer to Figure 18-104. Place the fan assembly into position in the chassis. Replace the twelve screws **(1)** (0515-0372) to attach the fan assembly to the chassis. Ensure the fan wires are not pinched. Torque to 9 inch-pounds.
3. Replace the Front Frame Assembly. Refer to the Front Frame Assembly replacement procedure.
4. Replace the top brace. Refer to the Top Brace and Power Supply Bracket replacement procedure.
5. Replace the instrument outer case. Refer to the Instrument Outer Case replacement procedure.

Input Connector Assembly

Removal

1. Remove the instrument outer case. Refer to the Instrument Outer Case removal procedure.
2. Remove the Front Frame Assembly. Refer to the Front Frame Assembly removal procedure.
3. Refer to Figure 18-107. Disconnect the semi-rigid cable W2 from the Input Connector Assembly.

Figure 18-107 Input Connector Assembly Removal

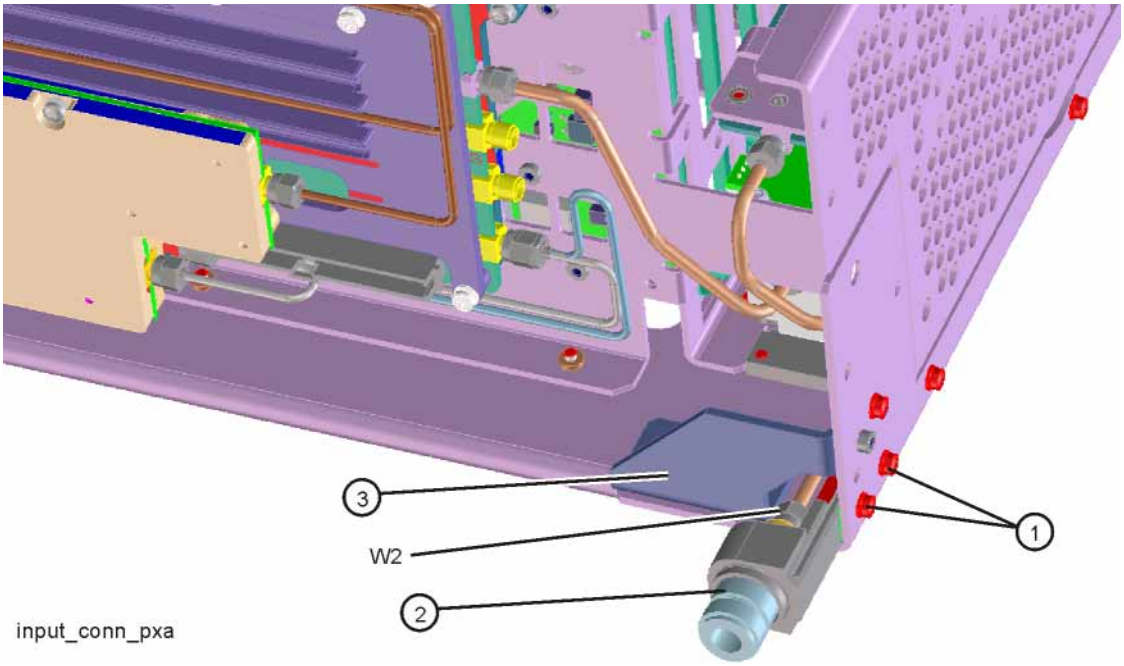

4. Remove the two screws **(1)** (0515-0372) that attach the Input Connector Assembly to the chassis. The connector assembly can now be lifted from the chassis.

Replacement

1. Refer to Figure 18-107. Place the Input Connector Assembly into position in the chassis. Replace the two screws **(1)** (0515-0372) to attach the Input Connector Assembly to the chassis. Torque to 9 inch-pounds.
2. Reconnect the semi-rigid cable W2 to the Input Connector Assembly. Torque to 10 inch-pounds.
3. Replace the Front Frame Assembly. Refer to the Front Frame Assembly replacement procedure.
4. Replace the instrument outer case. Refer to the Instrument Outer Case replacement procedure.

19 Post-Repair Procedures

What You Will Find in This Chapter

This chapter provides information that will enable you to return an instrument to full operation following the replacement of any instrument assembly. This information includes a table that shows which adjustments and/or performance tests must be executed after replacing an assembly.

Before Starting

There are three things you should do before starting any of the procedures listed or described in this chapter:

- Familiarize yourself with the safety symbols, and read the general safety considerations and the safety note definitions in the front of this guide, **before** you begin the procedures in this chapter.
- Check that the analyzer has been turned on and allowed to warm up.
- Ensure that the analyzer is operating within a temperature range of 20 °C to 30 °C.

Post-Repair Procedures

Post-Repair Procedures

Table 19-1 lists the adjustments and performance verification tests needed after an assembly replacement.

After an assembly is replaced, find the assembly that has been replaced in the left-hand column, and then perform the recommended adjustment and/or performance verification test. Making the recommended adjustments and/or performance verification tests doesn't guarantee all published specifications are being met. Only a full instrument calibration will do this.

NOTE

Refer to the analyzer user's guide for information on instrument warm-up before performing any of the procedures listed in this chapter.

The following procedures are also included in the "Additional Tasks" on page 565.

- "Calibration Data Backup and Restore"
- "BIOS Settings Verification"
- "Operating System Initialization"
- "FPGA Synchronization"
- "Programming Model and Serial Numbers"

Post-Repair Procedures

Table 19-1 Post-Repair Testing Requirements

Assembly	Adjustments to Perform (in the order listed)[a]	Performance Verifications to Perform After Adjustments[a]
A1A2 Front Panel Interface	None	Residual Responses Displayed Average Noise Level
A1A3 Liquid Crystal Display	None	Residual Responses Displayed Average Noise Level
A2 Analog IF Assembly	IF Flatness Adjust (Option B25, B40, or B1X if Option MPB is also present)	Power Bandwidth Accuracy Resolution Bandwidth Switching Uncertainty Residual Responses Displayed Average Noise Level IF Frequency Response (Option B25, B40, B1X) Absolute Amplitude Accuracy Display Scale Fidelity
A3 Digital IF Assembly	FPGA Synchronization[b]	Power Bandwidth Accuracy Resolution Bandwidth Switching Uncertainty Residual Responses Displayed Average Noise Level IF Frequency Response (Option B25, B40, B1X) Absolute Amplitude Accuracy Display Scale Fidelity
A4 CPU Assembly	BIOS Settings Verification[b] Set Instrument Time and Date[c]	Residual Responses Displayed Average Noise Level
A4BT1 Battery	BIOS Settings Verification[b] Set Instrument Time and Date[c]	Residual Responses Displayed Average Noise Level
A5 Disk Drive[d]	Accept End User License Agreement (EULA)[b] Instrument Software Update[e] All Adjustments[d][f]	Residual Responses Displayed Average Noise Level Frequency Response (All Tests)
A6 Power Supply	None	Residual Responses Displayed Average Noise Level Spurious Responses
A7 Midplane board	Program Instrument Model and Serial Number[b]	Residual Responses Displayed Average Noise Level
A8 Motherboard	None	Run all tests since instrument was disassembled.

Post-Repair Procedures

Table 19-1 Post-Repair Testing Requirements (Continued)

Assembly	Adjustments to Perform (in the order listed)[a]	Performance Verifications to Perform After Adjustments[a]
A9 & A10 RF Attenuators	Hardware Statistical Reset Utility 50 MHz Calibrator Adjustment Frequency Response (All Adjustments) Attenuator Slope	Residual Responses Displayed Average Noise Level Spurious Responses Third Order Intermodulation Absolute Amplitude Accuracy Input Attenuation Switching Uncertainty Frequency Response (All Tests)
A11 Low Band Switch	Frequency Response (All Tests) Attenuator Slope	Residual Responses Displayed Average Noise Level Spurious Responses Third Order Intermodulation Second Harmonic Distortion Absolute Amplitude Accuracy Frequency Response (All Tests)
A12 YTF Preselector	YTF Alignment (Press **System**, **Alignments**, **Advanced**, **Characterize Preselector**) Frequency Response (All Adjustments) Attenuator Slope Effective DANL (NFE) Characterize Noise Floor (NF2) If instrument frequency range is > 26.5 GHz software revision A.11.03 or greater is required.	Residual Responses Displayed Average Noise Level Spurious Responses Third Order Intermodulation Second Harmonic Distortion Absolute Amplitude Accuracy Frequency Response (All Tests)
A13 Front End Assembly	YTF Alignment (Press **System**, **Alignments**, **Advanced**, **Characterize Preselector**) RF Frequency Response (All Tests) IF Frequency Response UWBIF (Option B2X or B5X only) IF Frequency Response UWBIF Full Bypass Path (Option B2X or B5X and FBP only) Attenuator Slope IF Phase Linearity (Option B2X or B5X only) TOI Adjustment Effective DANL (NFE, for early instrument SW) Front End Controller Attenuator Adjustment Attenuator Slope Preamp On Characterize Noise Floor (Press **System**, **Alignments**, **Advanced**)	Residual Responses Displayed Average Noise Level Spurious Responses Third Order Intermodulation Second Harmonic Distortion Absolute Amplitude Accuracy RF Frequency Response (All Tests) IF Frequency Response UWBIF (Option B2X or B5X only) Effective DANL If the instrument has Option B2X or B5X, go to the Utilities menu and perform: IF Frequency Response UWBIF Check IF Phase Linearity Utility
A14 Synthesizer Assembly	Instrument Software Update (must be A.04.29 or later) FPGA Synchronization[b]	Residual Responses Displayed Average Noise Level Spurious Responses Phase Noise (All Tests) Frequency Response (All Tests)

Post-Repair Procedures

Table 19-1 Post-Repair Testing Requirements (Continued)

Assembly	Adjustments to Perform (in the order listed)[a]	Performance Verifications to Perform After Adjustments[a]
A15 Front End Controller	FPGA Synchronization[b] Front End Controller Attenuator Adjustment Frequency Response (All Tests) Attenuator Slope TOI Adjustment Effective DANL (NFE) Characterize Noise Floor (NF2) YTF Alignment (Press System, Alignments, Advanced, Characterize Preselector)	Residual Responses Displayed Average Noise Level Absolute Amplitude Accuracy Frequency Response (All Tests) Effective DANL
A16 Reference Assembly	FPGA Synchronization[b] 10 MHz Frequency Reference Adjust 50 MHz Calibrator Amplitude Adjust 4800 MHz Calibrator Amplitude Adjust (MPB) Instrument software A.10.52 or later.	Frequency Reference Accuracy Residual Responses Displayed Average Noise Level Frequency Readout Accuracy Count Accuracy Absolute Amplitude Accuracy Phase Noise (All Tests)
A17 LED Board	None	Residual Responses Displayed Average Noise Level
A18 BBIQ Interface Board (Option BBA)	Press Input/Output, I/Q, I/Q Cable Calibrate in IQ Analyzer mode Absolute Amplitude (Option BBA) Adjust	Residual Responses Displayed Average Noise Level Absolute Amplitude Accuracy at 250 kHz Frequency Response Below 250 kHz Frequency Response above 250 kHz Channel Match
A19 BBIQ Main Board (Option BBA)	FPGA Synchronization[b] Press Input/Output, I/Q, I/Q Cable Calibrate in IQ Analyzer mode Absolute Amplitude (Option BBA) Adjust	Residual Responses Displayed Average Noise Level Absolute Amplitude Accuracy at 250 kHz Frequency Response Below 250 kHz Frequency Response above 250 kHz Channel Match
A20 YTO	Assure 1st LO unlocked or unleveled messages do not appear.	Residual Responses Phase Noise Frequency Response (all tests)
A25 Wideband Analog IF (Option B1X or B2X or B5X)	IF Frequency Response UWBIF (B2X, B5X) IF Frequency Response (B25, B40, B85, B1X)	Noise Density IF Frequency Response UWBIF IF Frequency Response Check (Utility) for freq range > 8.4 GHz (Option B25, B40, B85, B1X)
A26/A27 Wideband Digital IF (Option B1X or B2X or B5X)	FPGA Synchronization[b]	

Post-Repair Procedures

Table 19-1 Post-Repair Testing Requirements (Continued)

Assembly	Adjustments to Perform (in the order listed)[a]	Performance Verifications to Perform After Adjustments[a]
A29 Audio Digitizer (Option 107)	Audio Step Gain and 10 kHz Calibrator Audio Flatness	Audio Amplitude Accuracy (Option 107) Audio Distortion (Option 107)
SW1 Preselector bypass switch (Option MPB)	Frequency Response (all tests) Reset Low Noise Path switch using software utility. 4800 MHz Calibrator Adjustment	Frequency Response (all tests)
SW2 Preselector bypass switch (Option MPB)	Frequency Response (all tests) Reset Preselector Bypass cycles using software utility. 4800 MHz Calibrator Adjustment	Frequency Response (all tests)
SW3 Low Noise Path Switch (Option LNP)	Frequency Response (all tests) Reset Low Noise Path switch using software utility.	Frequency Response (all tests)

a. Calibration Application Software is required for all performance tests and most adjustments. For details go to http://www.keysight.com/find/calibrationsoftware
b. See the Additional Tasks section in this chapter for detailed instructions on this task.
c. To set the instrument time and date press **Start**, **Control Panel**, **Date and Time**. Select **Region and Language** to change date and time formats.
d. Before replacing the A5 Disk Drive, see the “Calibration Data Backup and Restore” section in this chapter for details.
e. See Chapter 17, “Instrument Software” for instructions on updating the instrument software to the latest version.
f. The 50 MHz and 4800 MHz Calibrator Amplitude Adjustments must be done prior to Frequency Response Adjustments.

NOTE Some Adjustment tests may be found in the Utility portion of the Test Plan.

Post-Repair Procedures

Additional Tasks

Calibration Data Backup and Restore

In order for the instrument being repaired to not need all of the instrument adjustments and performance verification tests to be run after the A5 Disk Drive is replaced the calibration data will need to be backed up onto an external drive prior to removing the existing disk drive.

NOTE

While the backing up and restoring of the calibration data to the new disk drive will return the instrument performance to the state that it was prior to a repair this does not guarantee that all instrument performance parameters meet their specified values. A full instrument calibration would be required to verify this.

Data Backup

There are two different backup procedures that might need to be followed. Which backup procedure to be run will depend on whether the software will run or not.

If the Instrument Software Application Will Run

1. Connect a USB keyboard and mouse to two of the instrument rear panel USB ports
2. Connect a USB FLASH drive to one of the front panel USB port.
3. Press **System**, **Alignments**, **Backup or Restore Align Data**.
4. The Alignment Data Wizard window as shown in Figure 19-1 will appear.

Post-Repair Procedures

Figure 19-1 Alignment Data Wizard

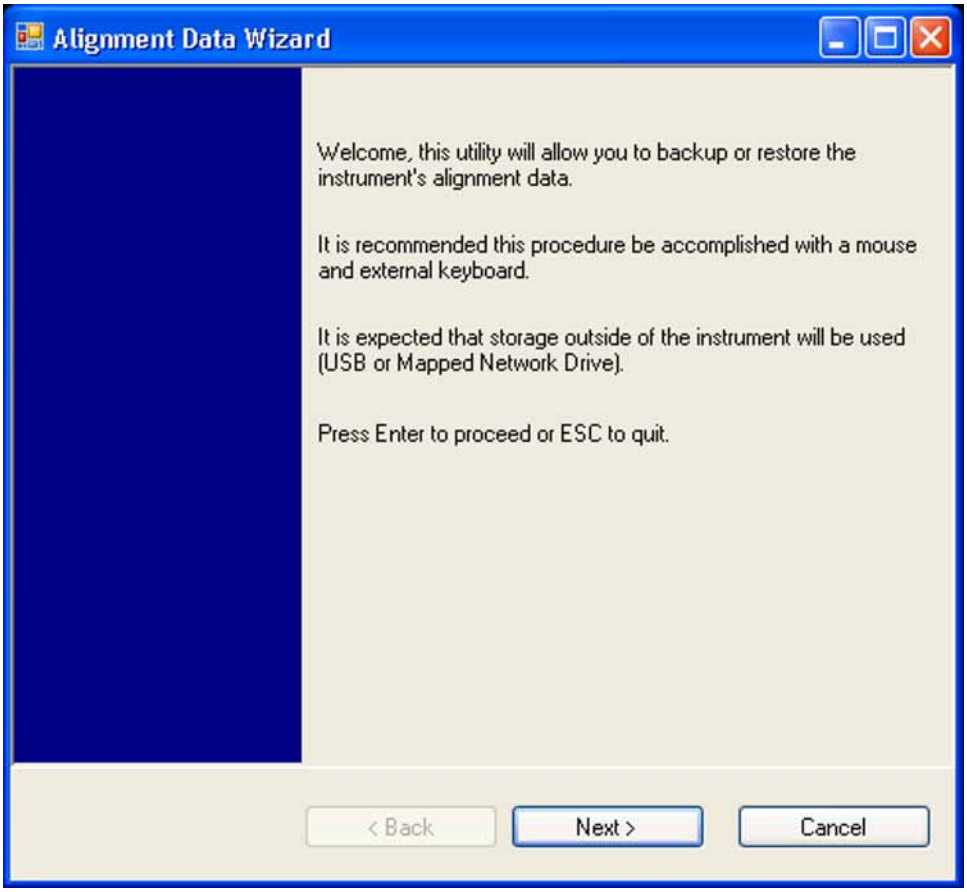

5. Follow the on-screen instruction to backup the calibration data to the USB FLASH drive.

If the Instrument Software Application Will Not Run

1. Connect a USB mouse to one of the instrument front panel USB ports.
2. Connect a USB FLASH drive to the other front panel USB port.
3. Using the mouse double-click on the Windows Explorer link on the desktop and navigate to the following folder:

   C:\Program Files\Agilent\SignalAnalysis\Infrastructure

4. Scroll down and double-click on BackupRestoreAlignDataWizard.exe.

   If BackupRestoreAlignDataWizard.exe does not appear, the instrument software is an early version, and you need to continue at "BackupRestoreAlignDataWizard.exe not available" below.

5. The window shown in Figure 19-2 appears. Enter the administrator password "Keysight4u!" and press **Yes**.

Post-Repair Procedures

Figure 19-2 User Account Control

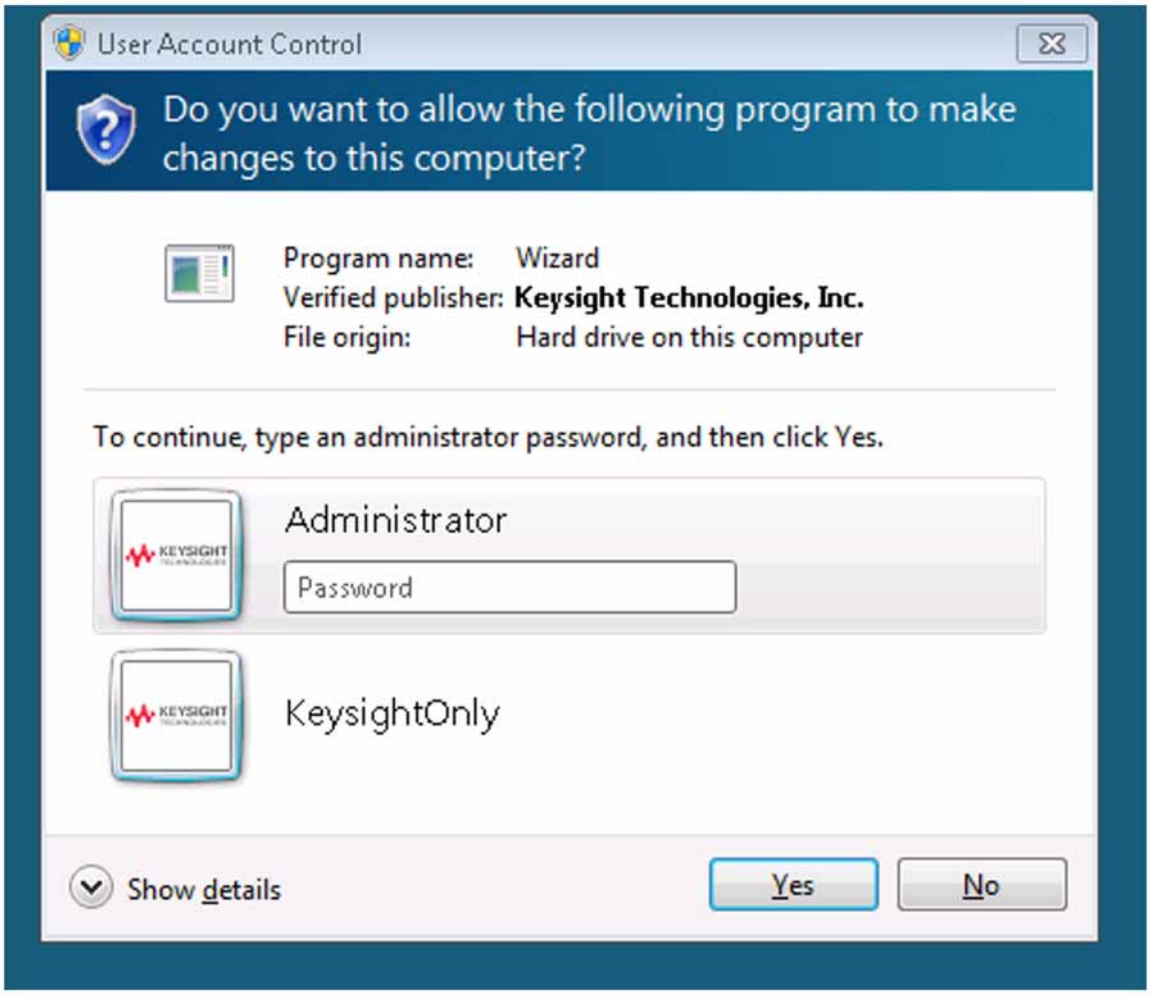

6. On the next screen select **Backup** and press **Next**.
7. On the screen shown in Figure 19-3, select a storage location. The default is the on-board CPU memory (SD card, F: drive). Press **Next** and then **Save**, to back up to this internal memory, or see step 8.

Post-Repair Procedures

Figure 19-3 Alignment Data Wizard

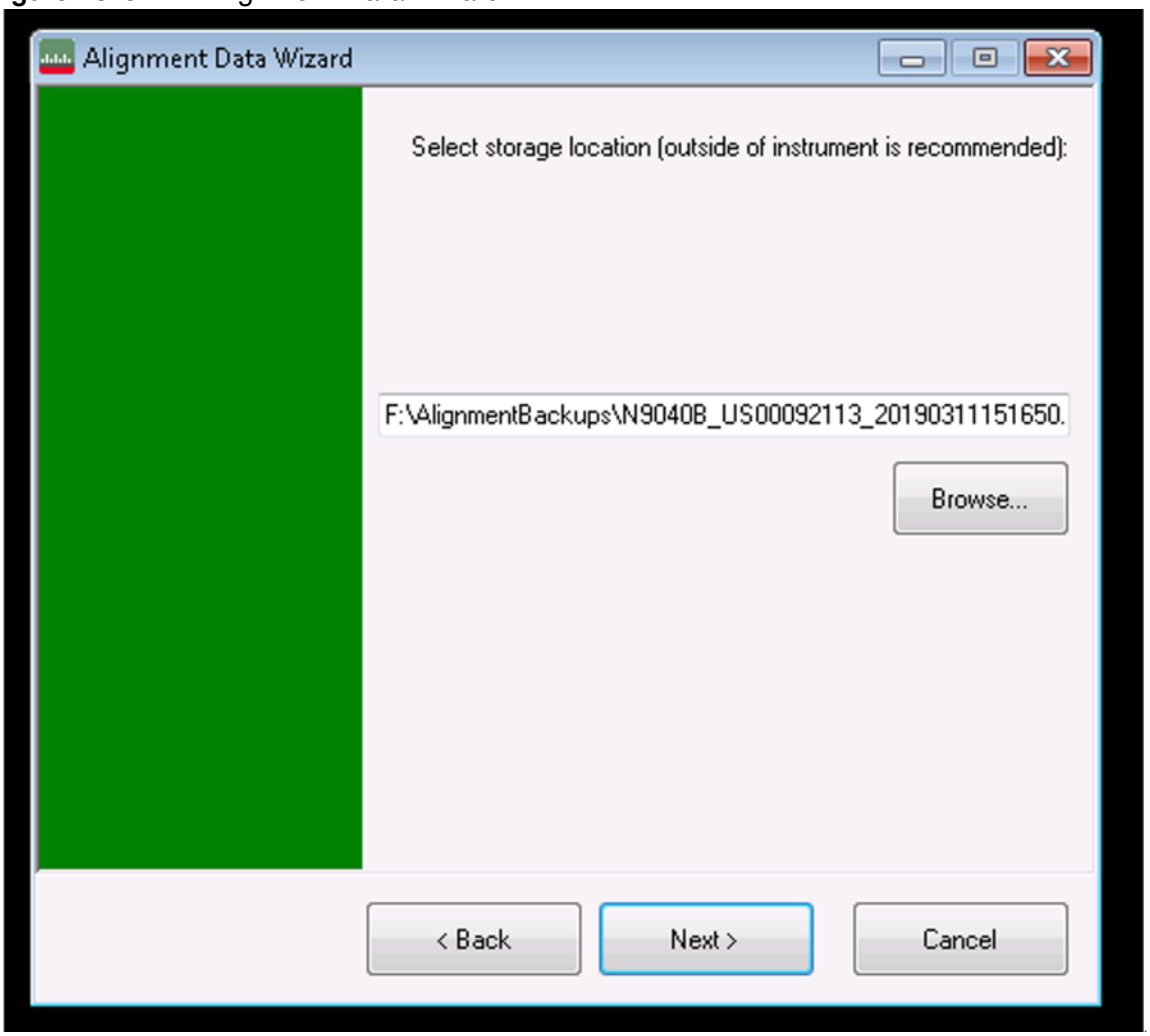

8. If you want to save the alignment data to a USB FLASH drive, press **Browse** and navigate to the USB drive. Press **Save**, then **Next**.
9. A message will appear that the Alignment data backed up successfully. Press **Finish**.

BackupRestoreAlignDataWizard.exe not available

1. Connect a USB mouse to one of the instrument front panel USB ports.
2. Connect a USB FLASH drive to the other front panel USB port.
3. Using the mouse double-click on the Windows Explorer link on the desktop and navigate to the following folder:

   C:\Program Files\Agilent\SignalAnalysis\Physics
4. Double-click on BackupAndRestore.exe and the window shown in Figure 19-4 will appear.

Post-Repair Procedures

Figure 19-4 Calibration Data Backup

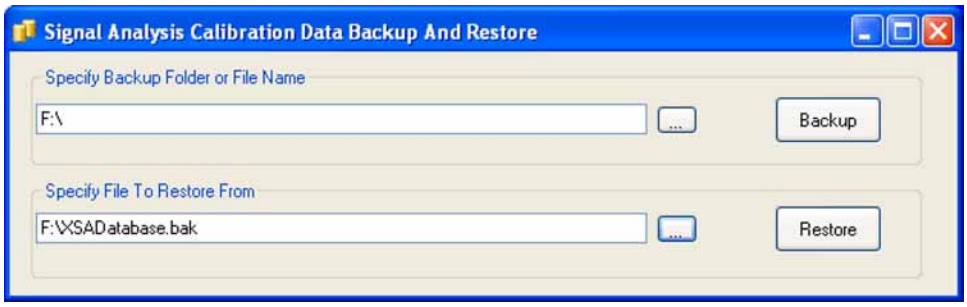

5. Under the “Specify Backup Folder or File Name” use the mouse to select the “...” button to open the “Browse For Folder” dialog box.
6. Select the USB FLASH drive and press **OK**.

NOTE

While you can use the “Make New Folder” button in the “Browse For Folder” dialog box to create a sub-folder on the USB FLASH drive, and you can specify a filename in the “Specify Backup Folder or File Name” window, you can also just use the root directory on the drive and let the instrument select a default filename for you.

7. Select “Backup” and wait for the calibration database to be backed up.
8. When the backup has completed close the Calibration Data Backup And Restore window.

Post-Repair Procedures

Data Restore

1. Connect a USB mouse to one of the instrument front panel USB ports.
2. Locate the USB FLASH drive that was earlier used to backup the instrument calibration file and insert it into one of the instrument front panel USB ports.
3. Restore the instrument calibration data by pressing: **System**, **Alignments**, **Backup or Restore Align Data...** The Alignment Data Wizard window as shown in Figure 19-1 will appear.
4. Follow the on-screen instruction to restore the previously saved calibration data from the USB FLASH drive.
5. Cycle instrument power.

Post-Repair Procedures

BIOS Settings Verification

Whenever either the A4 CPU assembly or the A4BT1 CPU Battery is changed there are certain BIOS settings that need to be verified. If these are not set correctly the instrument may not boot up or operate correctly.

Default BIOS Settings

1. Connect an external USB keyboard to one of the front panel USB ports.
2. Turn on instrument power.
3. Confirm Keysight Technologies splash screen comes up within a few seconds.
4. Press the key on the keyboard specified on the initial boot screen to enter the setup utility.
5. Navigate to the Exit screen and select “Restore Defaults” or “Load Setup Defaults”, whichever is present.
6. Once the defaults have been loaded select “Save Changes” and “Exit”.

Post-Repair Procedures

Operating System Initialization

When a new disk drive is powered on for the first time the operating system will need to initialize itself before the instrument can be used. This will take just a few minutes to complete and will require very little user interaction.

Initialization

1. With the new disk drive installed power the instrument on.
2. Within a few seconds you will see the initial Keysight Technologies splash screen, and then the boot selection menu as seen in Figure 19-5.
3. Allow the instrument to boot the Windows operating system. (This will happen automatically after 5 seconds if the instrument is left alone).

Figure 19-5 Boot Selection Screen

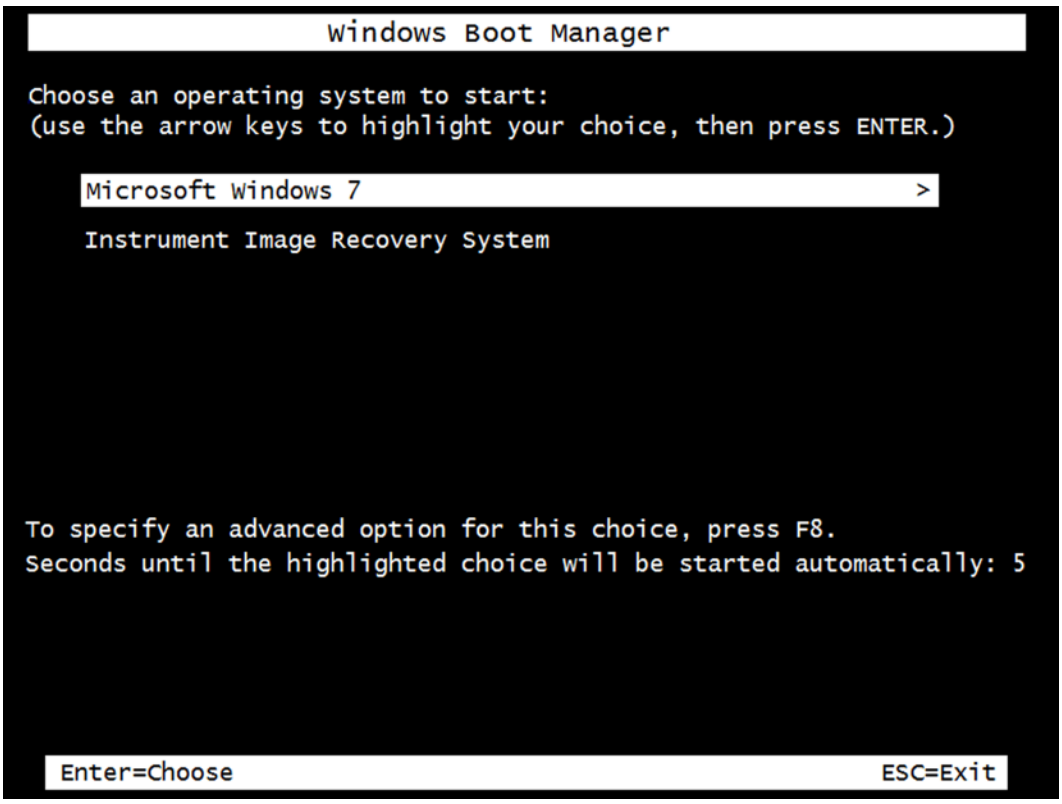

Post-Repair Procedures

4. After a few moments the License Agreement message window will appear, as shown in Figure 19-6.

Figure 19-6 License Agreement Window

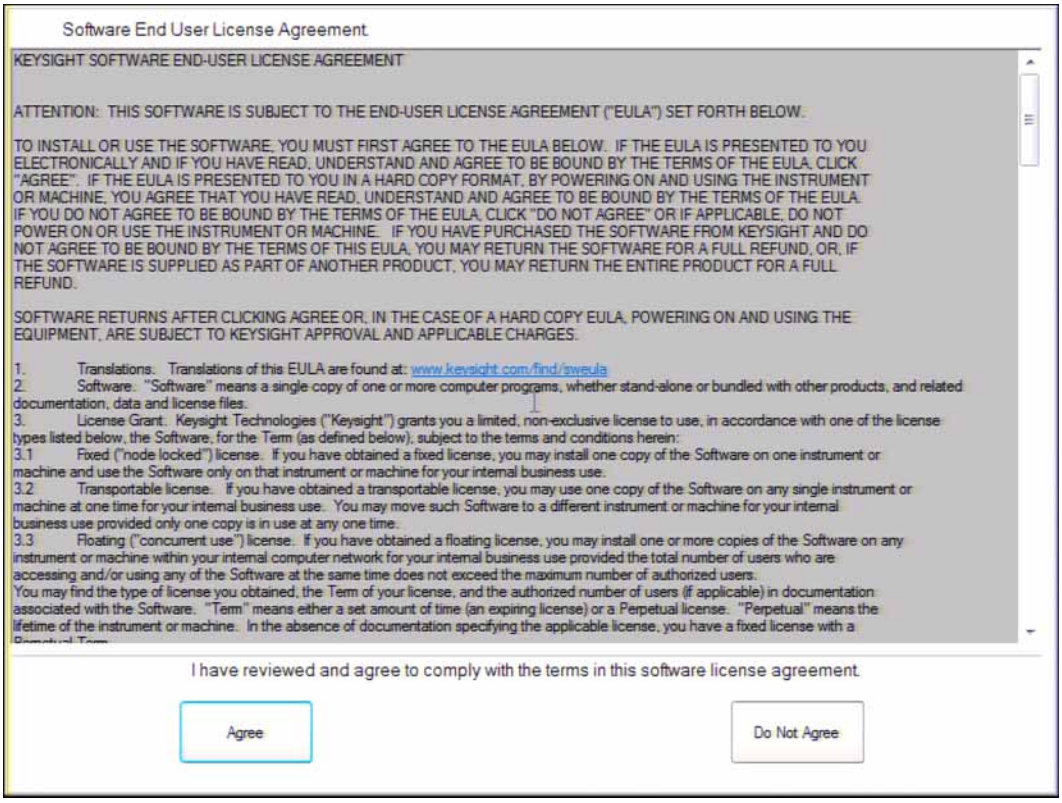

5. Select “Agree” to continue with the operating system initialization.

NOTE

If the initialization process would like to be postponed select “Do Not Agree” at this time to safely shut the instrument off. The next time this disk drive is powered on this process will be restarted.

Post-Repair Procedures

6. The instrument will now reboot and complete the initialization process. Once this process has completed the Anti-Virus Message. At this point the operating system initialization process will be completed and either selection can be made, or the instrument can be powered off.

NOTE

Keysight Technologies does not load anti-virus software into the signal analyzer. It is the customer's responsibility to install anti-virus software.

7. The disk drive in use is now ready for further configuration.

Post-Repair Procedures

FPGA Synchronization

There is FPGA (Field-Programmable Gate Array) program code on many different assemblies inside of the instrument, and all of these must be of a compatible version with the instrument software revision. In order to ensure that this requirement is met when either an assembly is replaced that contains FPGA code on it, or if the A5 Disk Drive is replaced with a drive that has a different version of software than the previous drive, you will need to take certain steps to ensure that the instrument operates properly.

NOTE

Even if an instrument appears to work properly when an assembly with FPGA code is replaced, that does not mean that the FPGA code is completely compatible with the software version installed in the instrument. There could be incompatibilities that will only be seen under certain measurement conditions.

Updating the Instrument FPGA Code

All instruments have a utility included in them that will update the FPGA code on all of the different assemblies in the instrument that have it. When this utility is run it will detect the assemblies that need to be updated and will update them to the correct revision.

NOTE

Once you start the FPGA programming process you MUST NOT interrupt the process for any reason. This would include turning the instrument off or unplugging the power cord to the instrument. Doing so will result in an inoperative instrument, requiring the affected assembly to be replaced.

1. Close the instrument application software by pressing **System**, **Exit Program**, **OK** using the front panel keys.
2. Connect a USB mouse to one of the instrument front panel USB ports.
3. Using the mouse double-click on the Windows Explorer link on the desktop and navigate to the following folder:

   C:\Program Files\Agilent\SignalAnalysis\Physics
4. In this folder find and execute the file named:

   FPGA_Prog.bat

Post-Repair Procedures

5. The FPGA Programming Utility will start and a window as shown in Figure 19-7 will appear.

Figure 19-7 FPGA Programming Utility

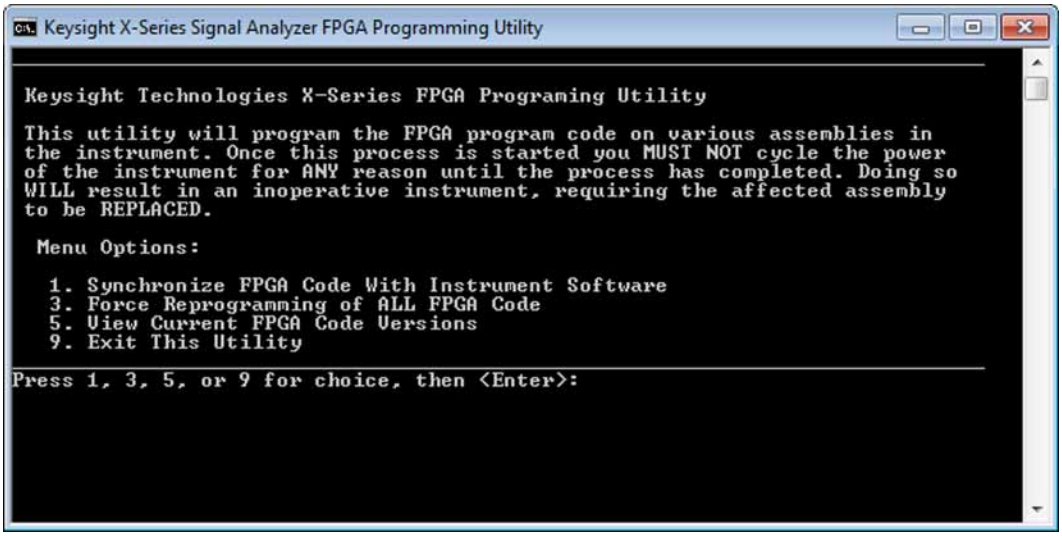

6. To program the FPGA code enter **1** and press **Enter**. You will need to confirm this selection by pressing **1** and **Enter** one more time.
7. The programming of the FPGA code could take a few minutes to complete. Once it has finished the instrument will reboot itself to use the new code and this process will then be completed.

Post-Repair Procedures

Programming Model and Serial Numbers

Since the instrument model and serial numbers are stored only on the A7 Midplane assembly, this information will be lost when this board assembly is replaced. Until the instrument model and serial numbers are restored the instrument application software will not allow any user measurements to be made, due to the fact that all previously installed license keys will not be accepted. However, the license files will not be automatically deleted. Once the model and serial numbers are restore the license files will then be recognized and accepted, returning the instrument to the capability that was available prior to the A7 Midplane assembly replacement.

To program the model and serial numbers into a replacement A7 Midplane assembly the N7814A Keysight X-Series Signal Analyzer Calibration Application Software will be required.

Information regarding N7814A Keysight X-Series Signal Analyzer Calibration Application Software can be found at:

http://www.keysight.com/find/calibrationsoftware

When the calibration software first detects the instrument it will recognize that it does not have a valid model and serial number and will prompt the user to enter the correct values.

NOTE

Be very careful when entering the instrument serial number into the software, because once it has been written it can no longer be changed.

Since the instrument model and serial numbers are stored on the A7 Midplane assembly, this should only be required when this assembly has been replaced with a new one.

Post-Repair Procedures

20 Functional Tests

Functional Test Versus Performance Verification

Functional tests are tests of various instrument parameters that give a high degree of confidence that the analyzer is operating correctly. They are recommended as a check of analyzer operation for incoming inspection or after a repair. Measurement uncertainty analysis is not available for functional tests, and the analyzer is checked against limits that are wider than the published specifications. The functional tests are designed to test an analyzer operating within the temperature range defined by the analyzer specifications using a minimum set of test equipment. If a test does not pass, performance verification tests must be run to determine whether a problem exists.

Functional tests use a minimum set of test equipment to check a much smaller range of parameters (and a limited number of data points for each parameter) than do performance verification tests. Functional tests use limits that are wider than the published specifications; measurement uncertainty analysis is **not** available for functional tests.

NOTE

If a functional test does not pass, you must run performance verification tests to determine whether a problem exists.

Performance verification tests span a wide range of instrument parameters and provide the highest level of confidence that the instrument conforms to published specifications. These tests can be time consuming and require extensive test equipment.

Before Performing a Functional Test

1. Ensure that you have the proper test equipment.
2. Switch on the unit under test (UUT) and let it warm up (in accordance with warm-up requirements in the instrument specifications).
3. Allow sufficient warm-up time for the required test equipment (refer to individual instrument documentation for warm-up specifications).
4. Ensure that the analyzer's frequency reference is set to Internal:
   a. Press the **Input/Output**, More, **Freq Ref In** keys.
   b. If the **Freq Ref In** softkey does **not** show Internal, press the **Freq Ref In** softkey and select Internal.
5. Following instrument warm-up, perform the auto align routine:

   Press **System**, **Alignments**, **Align Now, All**.

NOTE Functional test accuracy depends on the precision of the test equipment used. Ensure that all of the test equipment is calibrated before running a functional test.

Test Equipment

The table below summarizes the test equipment needed to perform all of the functional tests. Alternate equipment model numbers are given in case the recommended equipment is not available. If neither the recommended nor the alternative test equipment are available, substitute equipment that meets or exceeds the critical specifications listed.

Table 20-1

Analyzer Option	Item	Critical Specifications	Recommended Keysight Model	Alternate Keysight Model
	Adapters			
All	3.5 mm (f) to 3.5mm (f) (connector saver for source)	Frequency: 10 MHz to 26.5 GHz VSWR: < 1.1:1	83059B	1250-1749
All	BNC (f) to SMA (m)	Frequency: 40 MHz	1250-1200	
All	Type N (f) to Type N (f)	Frequency: 10 MHz to 18 GHz VSWR: < 1.05:1	1250-1472	1250-0777
All	Type N (m) to 3.5 mm (m)	Frequency: 10 MHz to 18 GHz VSWR: < 1.1:1	1250-1743	
All	Type N (m) to 3.5 mm (f)	Frequency: 10 MHz to 18 GHz VSWR: < 1.1:1	1250-1744	
All	Type N (f) to 3.5 mm (f)	Frequency: 10 MHz to 18 GHz VSWR: < 1.1:1	1250-1745	
All	Type N (m) to BNC (f)	Frequency: 10 MHz to 1 GHz VSWR: < 1.05:1	1250-1476	
	Attenuators			
All	10 dB Step Attenuator	Frequency: 50 MHz Range: 0 to 70 dB	8495A	8496A
All	10 dB Fixed Attenuator (2 required)	Frequency: 50 MHz VSWR: < 1.2:1	8493C Option 010	8493A Option 010 or 8493B Option 010
Preamp Options (Pxx)	30 dB Fixed Attenuator	Accuracy: < 0.05 dB @ 50 MHz	11708A	

Table 20-1

Analyzer Option	Item	Critical Specifications	Recommended Keysight Model	Alternate Keysight Model
	Cables			
All	3.5 mm (1 meter)	Frequency: 10 MHz to 26.5 GHz VSWR: < 1.4:1 Loss: < 2.0 dB	11500E	8120-4921
544, 550	2.4 mm (1 meter)	Frequency: 10 MHz to 50 GHz VSWR: < 1.55:1 at 50 GHz Loss: < 6.0 dB at 50 GHz	8120-6164	
All	Cable, BNC (3 required)	120 cm (48 in.) BNC cable	10503A	
BBA	Cable, BNC	120 cm (48 in.) BNC cable Flatness:(250 kHz to 40 MHz) < 0.5 dB	10503A	
BBA	Cable, BNC	BNC (m) 23 cm (9 in) max	10502A	
	Signal Source			
All	Synthesized Sweeper	Frequency: 10 MHz to 50 GHz[a] Harmonic level: < - 40 dBc Amplitude range: 10 to - 20 dBm Frequency Accuracy: 0.02%	PSG[b]	83630B, 83640B, 83650B
BBA	RF Signal Generator	Frequency: 250 kHz to 40 MHz Amplitude: ~ - 10 dBm Flatness:< ± 0.75 dB	E4438C	33250A
	Power Meter			
All	Power Meter	Power Reference Accuracy: ±1.2% Compatible with power sensor	E4418B	E4419B
All	Power Sensor	Frequency Range: 50 MHz to 3.66 GHz Amplitude Range: -70 to –20 dBm	8481D	8487D 8485D
503, 508, 513	Power Sensor	Frequency Range: 50 MHz to 13.66 GHz Amplitude Range: -30 to +20 dBm	8481A	
526	Power Sensor	Frequency Range: 50 MHz to 26.5 GHz Amplitude Range: -30 to +20 dBm	8485A	
544, 550	Power Sensor	Frequency Range: 50 MHz to 50 GHz Amplitude Range: -30 to +20 dBm	8487A	
P03	Low Power Sensor	Frequency Range: 50 MHz to 3.6 GHz Amplitude Range: –70 to –20 dBm	8481D	8485D 8487D

Table 20-1

Analyzer Option	Item	Critical Specifications	Recommended Keysight Model	Alternate Keysight Model
Preamp other than P03	Low Power Sensor	Frequency Range: 50 MHz to 50 GHz[c] Amplitude Range: –70 to –20 dBm	8487D	8485D[c]
	Miscellaneous Equipment			
All	Filter, 50 MHz Low Pass	Cutoff Frequency: 50 MHz Rejection at 65 MHz: > 40 dB Rejection at 75 MHz: > 60 dB Rejection at 80 MHz: > 60 dB Frequency: 10 MHz to 26.5 GHz	0955-0306	
544, 550	Power Splitter, 2.4 mm	Nominal Insertion Loss: 8.5 dB Tracking Between Ports: < 0.4 dB	11667C	
526	Power Splitter, 3.5 mm	Nominal Insertion Loss: 6 dB Tracking Between Ports: < 0.25 dB	11667B	
503, 508, 513	Power Splitter	Nominal Insertion Loss: 6 dB Tracking Between Ports: < 0.25 dB	11667A	11667B
All	Termination, 50 W	Type N (m) Connector Frequency: 30 Hz to 26.5 GHz	909A Option 012	
BBA	Termination, 50 W	BNC (m) Connector Frequency: 250 kHz to 40 MHz	11593A	

a. Maximum frequency equal to or greater than the maximum frequency of the PXA.
b. PSG model numbers: E8244A, E8254A, E8247C Option 520, E8247C Option H31 or 540, E8257D Option 520, E8257D Option 550, E8257D Option 567, E8267D Option 544.
c. Maximum frequency equal to or greater than the maximum frequency of the preamplifier option.

Displayed Average Noise Level (DANL)

Test Limits (with 0 dB input attenuation)

See Table 20-2 on page 585 for values.

The Displayed Average Noise Level (DANL) of the signal analyzer is measured across a 10 kHz frequency span at several center frequencies. The analyzer input is terminated into a 50W load. A test is performed to assure the measurement is not performed in the presence of a residual response. The measurement is then averaged, and the result is normalized to a 1 Hz bandwidth.

Item	Critical Specifications (for this test)	Recommended Keysight Model
Termination, 50W Type-N(m)	Frequency: DC to 18 GHz	909A Option 012

Figure 20-1 DANL Test Setup

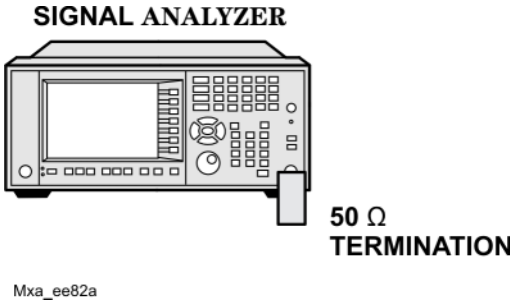

Procedure

1. Configure the equipment as shown in Figure 20-1.
2. Press **Mode**, **Spectrum Analyzer**, **Mode Preset** on the analyzer.
3. Set up the signal analyzer by pressing:

   FREQ Channel, **Center Freq**, 10, **MHz**
   Input/Output, RF Input, **RF Coupling**, select **DC**
   Span X Scale, **Span**, 10, **kHz**
   AMPTD Y Scale, –70, **dBm**
   AMPTD Y Scale, **Attenuation**, **MechAtten**, 0, **dB**
   BW, **Res BW**, 1, **kHz**
   BW, **Video BW**, 100, **Hz**
   Meas Setup, Average/Hold, Number, 20, **Enter**
   Trace/Detector, **Trace Average**
   Single
4. Press **Restart**, then wait for Average/Hold to display 20/20.
5. Press **View/Display**, **Display**, then press **Display Line**, **On**.

6. Rotate the knob and set the display line at the average amplitude of the displayed noise floor by visual inspection.
7. Confirm that the measurement is performed on the analyzer noise floor and not on a residual response within the displayed 10 kHz span.

NOTE Ignore the residual response if one appears when taking the measurement.

8. Enter the value of the display line as the Measured Average Noise Level at 10 MHz column in Table 20-2.
9. Normalize the measured value to a 1 Hz BW by adding –30 dB to the measured value.

NOTE The –30 dB value is added because the formula used to calculate the value of the noise power in a 1 Hz BW when measured with a 1 kHz BW is:

Normalized Noise = 10 Log (BW 2/BW 1) where BW 2 is the 1 kHz BW we measure and BW 1 is 1 Hz BW to which we want to normalize.

Therefore, 10 Log (1000) = 30 dB, so the noise floor will be 30 dB lower in a 1 Hz BW.

10. Enter the normalized value of the displayed average noise level in. Table 20-2
11. The value of the normalized displayed average noise should be less than the specification value.
12. Change the analyzer center frequency to the next value listed in Table 20-2. Press: **FREQ Channel**, **Center Freq**, [Table 2-1 Value], **GHz**
13. Repeat step 4 through step 12 to fill in the remainder of Table 20-2 for your analyzer frequency range.

Table 20-2 Displayed Average Noise Level (DANL) Results

Center Frequency	Measured Average Noise Level (dBm)	Normalized Average Noise Level/(1 Hz BW) (dBm)	Test Limits (dBm)
10 MHz			–153
2 GHz			–151
6 GHz			–148
13 GHz			–147
20 GHz			–141
26.5 GHz			–135

Frequency Readout Accuracy

Test Limits

Frequency Readout Accuracy is equivalent to the following equation:

$$\pm(\mathbf{0.25}\% \times span + \mathbf{5}\% \times RBW + \mathbf{2}\ Hz + \mathbf{0.5} \times horizontal\ resolution)$$

See Table 20-3 on page 587 for actual values.

The frequency readout accuracy is measured in several spans and center frequencies that allow both internal analyzer synthesizer modes and prefilter bandwidths to be tested. Frequency reference error is eliminated by using the same frequency standard for the analyzer and signal source.

Item	Critical Specification (for this test)	Recommended Keysight Model
Adapter Type-N (m) to 3.5 mm (f)	Frequency: 10 MHz to 1.51 GHz VSWR: < 1.1:1	1250-1744
Adapter 3.5 mm (f) to 3.5 mm (f)	Frequency: 10 MHz to 1.51 GHz VSWR: < 1.1:1	83059B
Cable, 3.5 mm, 1 meter	Frequency: 10 MHz to 1.51 GHz VSWR: < 1.4:1	11500E
Cable, BNC, 120 cm	Frequency: 10 MHz	10503A
Synthesized Sweeper	Frequency: 10 MHz to 1.51 GHz	PSG

Figure 20-2 Frequency Readout Accuracy Test Setup

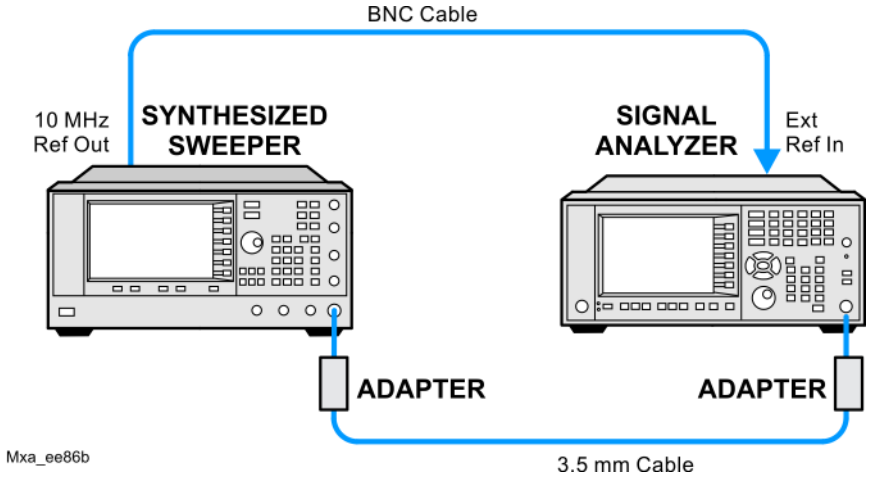

Procedure

1. Configure the equipment as shown in Figure 20-2. Confirm the analyzer's built-in auto alignment has been performed within the past 24 hours.
2. On the synthesized sweeper, press **PRESET**, then set the controls as follows:

   FREQUENCY, 1505, **MHz**
   POWER LEVEL, –10, **dBm**
   RF, On

3. Set up the signal analyzer by pressing:

   Mode, **Spectrum Analyzer**
   Mode Preset
   Input/Output, More, **Freq Ref In**, **External**
   FREQ Channel, **Center Freq**, 1505, **MHz**
   Span X Scale, Span, 2990, MHz
   Trace/Detector, **More**, **Detector**, **Sample**
   Single

4. Press **Restart**.

   Press **Peak Search** on the analyzer. If the instrument is functioning correctly, the marker reading in the active function block will be between the values listed in Table 20-3. Record the marker value in the Marker Frequency Readout column in Table 20-3.

5. On the signal analyzer, change the span and center frequency as listed in Table 20-3.
6. Change the synthesized sweeper frequency to match the center frequency of the analyzer.
7. Repeat step 4 through step 6 until the Marker Frequency Readout column of Table 20-3 is complete.

Table 20-3 Frequency Readout Accuracy Results

Span (MHz)	Center Frequency (MHz)	Minimum	Marker Frequency Readout	Maximum
2990	1505	1495.9 MHz		1514.1 MHz
127.2	1505	1504.56 MHz		1505.44 MHz
54.1	1505	1504.8122 MHz		1505.1878 MHz
7.95	1505	1504.97240 MHz		1505.0276 MHz
0.106	1505	1504.999630 MHz		1505.000370 MHz
1.98	517.59	517.58316 MHz		517.59684 MHz
1.98	832.50	832.49316 MHz		832.50684 MHz

Second Harmonic Distortion (SHD)

Test Limits

Applied Frequency	Mixer Level[a]	Distortion
40 MHz	–15 dBm	< –60 dBc

a. Mixer Level = Input Level - RF Attenuation

This test checks the second harmonic distortion of the signal analyzer by tuning to twice the input frequency and examining the level of the distortion product. A low pass filter is inserted between the source and the signal analyzer to prevent the source second harmonic from artificially raising the second harmonic product displayed on the analyzer.

Item	Critical Specifications (for this test)	Recommended Keysight Model
Adapter Type-N (m) to BNC (f)	Frequency: 10 MHz to 80 MHz VSWR: < 1.05:1	1250-1476
Adapter BNC (f) to SMA (m)	Frequency: 40 to 80 MHz	1250-1200
Adapter 3.5 mm (f) to 3.5 mm (f)	Frequency: 10 MHz to 80 MHz VSWR: < 1.1:1	83059B
Cable, BNC 120 cm (2 required)	Frequency: 10 to 40 MHz	10503A
Filter, 50 MHz Low Pass	Cutoff Frequency: 50 MHz Rejection at 65 MHz: > 40 dB Rejection at 75 MHz: > 60 dB	0955-0306
Synthesized Sweeper	Frequency: 50 MHz Spectral Purity: Better than –30 dBc	PSG

Figure 20-3 Second Harmonic Distortion Test Setup

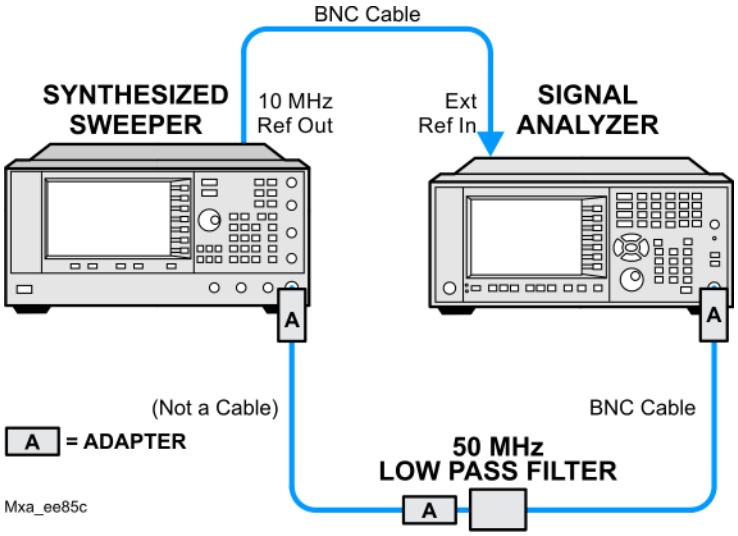

Procedure

1. Configure the equipment as shown in Figure 20-3.
2. Press **Mode**, **Spectrum Analyzer**, **Mode Preset** on the signal analyzer and Preset the synthesized sweeper.
3. Set up the synthesized sweeper by pressing:

   Frequency, 40, **MHz**
   Amplitude, –5, **dBm**

4. Set up the signal analyzer by pressing:

   Input/Output, **More**, **Freq Ref In**, **External**
   FREQ Channel, **Center Freq**, 40, **MHz**
   Span X Scale, **Span**, 1, **MHz**
   AMPTD Y Scale, Attenuation, Mech Atten, 10, **dB**

5. On the analyzer, press **Peak Search**.
6. Adjust the synthesized sweeper amplitude for a signal analyzer display of –5 dBm ±0.1 dB.
7. On the signal analyzer, activate the marker delta function by pressing the **Marker** and **Delta** keys.
8. On the signal analyzer, press:

   FREQ Channel, **Center Freq**, 80, **MHz**
   Meas Setup, **Average/Hold Number**, 20, **Enter**
   Trace/Detector, Trace Average
   Single

9. Press **Peak Search**. Enter the displayed value under the Measured Second Harmonic Distortion (dBc) heading in Table 20-4.

Table 20-4 Second Harmonic Distortion Results

Applied Frequency (MHz)	Measured Second Harmonic Distortion (dBc)	Mixer Level (dBm)	Specification (dBc)
40		–15	–60

Amplitude Accuracy at 50 MHz

Test Limits

Amplitude Accuracy should remain within 1.13 dB of the measured source value across the range of source levels and changes in resolution bandwidth. The preamp (Option P03, P08, P13, P26) should remain within ±1.3 dB of measured values.

A synthesized sweeper is used as the signal source for the test. The source amplitude is varied using the signal source amplitude control. The attenuation and resolution bandwidth are varied on the signal analyzer. The source amplitude is measured by the power meter and signal analyzer at each setting, and the values compared. The difference between each pair of measurements indicates the amplitude accuracy.

Item	Critical Specifications	Recommended Keysight Model
Adapter	Type-N (m), to 3.5 mm (m)	1250-1743
Adapter	3.5 mm (f) to 3.5 mm (f)	83059B
Attenuator, 30 dB	Accuracy: < 0.5 dB at 50 MHz	11708A
Cable	3.5 mm, 1 meter	11500E
Cable	BNC, 120 cm	10503A
Power Meter	Compatible with power sensor	E4418B
Power Sensor	Amplitude Range: -25 dBm to 10 dBm	8485A
Power Splitter	3.5 mm (f) connectors 6 dB loss	11667B
Synthesized Sweeper	Typical Temperature Stability: 0.01 dBc/°C	PSG

Figure 20-4 Amplitude Accuracy Test Setup

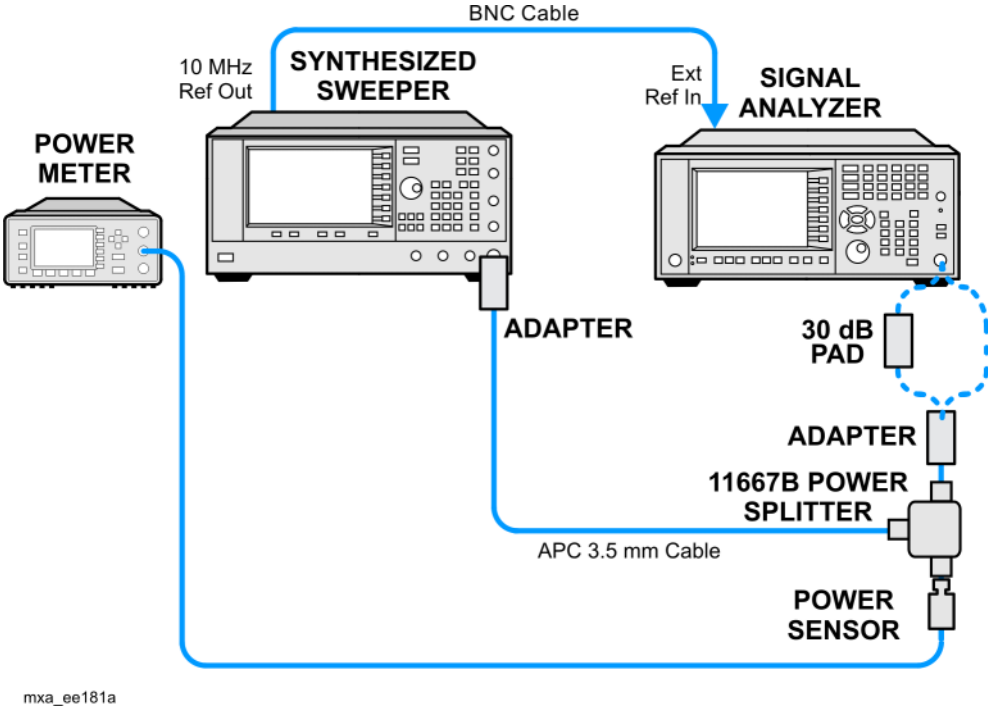

Procedure

1. Zero and calibrate the power meter.
2. Configure equipment as shown in Figure 20-4, with the power splitter connected directly to the signal analyzer input through the adapter.

CAUTION To minimize stress on the test equipment connections, support the power sensor.

3. If the auto alignment for the analyzer has not been performed within the past 24 hours, press **System**, **Alignments**, **Align Now, All** to perform the auto alignment routine.
4. Press **Mode**, **Spectrum Analyzer**, **Mode Preset** on the analyzer.
5. Set up the synthesized sweeper by pressing:

   CW, 50, **MHz**
   Power Level, -4, **dBm**
   RF (On)

6. Set up the signal analyzer by pressing:

   Input/Output, More, Freq Ref In, **External**
   FREQ Channel, **Center Freq**, 50, **MHz**
   Span X Scale, 2, **MHz**
   AMPTD Y Scale, **Attenuation, Mech Atten, 10, dB**
   Input/Output, **RF Input**, **RF Coupling**, select **DC**

Sweep/Control, **Sweep Setup**, **Swp Time Rules**, **SA - Accuracy Meas Setup**, **Average/Hold Number**, 20, **Enter**
Trace/Detector, **Trace Average**
Single

7. Perform the following steps for each row listed in Table 20-5:
   a. Set the synthesized sweeper amplitude to the value listed in the Nominal Source Amplitude column in Table 20-5.
   b. Set the Mech Atten as indicated in the Attenuation column in Table 20-5.
   c. Set the Span as listed in the Span column of Table 20-5.
   d. Record the synthesized sweeper amplitude, as measured by the power meter, in the Power Meter Amplitude column of Table 20-5.
   e. On the signal analyzer, press **Restart**.
   f. Wait for the signal analyzer to finish averaging.
   g. Press Peak Search.
   h. Record the signal amplitude, as measured by the analyzer in the Measured Amplitude column of Table 20-5.
   i. Calculate the signal amplitude accuracy error using the following equation, and record the results under the Amplitude Accuracy Error column:

$$\text{Amplitude Accuracy Error} = \text{Meas_amp} - \text{Power_meter}$$

Table 20-5 Amplitude Accuracy Results

Nominal Source Amplitude (dBm)	Attenuation (dB)	Span (MHz)	Measured Amplitude Meas_amp (dBm)	Power Meter Amplitude Power_meter (dBm)	Amplitude Accuracy Error (dB)	Test Limit (dB)
-4	10	2				±1.13 dB
-9	10	1				±1.13 dB
-14	10	0.5				±1.13 dB
-4	20	0.1				±1.13 dB
-14	20	0.1				±1.13 dB
-4	30	0.1				±1.13 dB
-14	30	0.1				±1.13 dB

Testing Preamp Option (P03, P08, P13, P26)

Instruments containing Option P03, P08, P13, P26 must have the preamp function turned on and tested.

Procedure

1. On the analyzer, press **AMPTD Y Scale**, **More**, **Internal Preamp**, **Low Band**.
2. Connect the equipment as shown in Figure 20-4 on page 592, using a 30 dB pad between the adaptor and the signal analyzer input.
3. Set the synthesized sweeper amplitude to the value listed in the Nominal Source Amplitude column in Table 20-6.
4. Set the signal analyzer input attenuation to 0 dB.
5. Set the Span as listed in Table 20-6.
6. Record the synthesized sweeper amplitude, as measured by the power meter, in the Power Meter Amplitude column of Table 20-6.
7. On the signal analyzer, press **Restart**.
8. Wait for the analyzer to finish averaging.
9. Press **Peak Search**.
10. Record the signal amplitude as measured by the analyzer in the measured amplitude column of Table 20-6.
11. Calculate the signal amplitude accuracy using the following equation:

    Amplitude Accuracy Error = Meas_amp + 30 dB - Power_meter

12. Record the results under the Amplitude Accuracy Error column of Table 20-6.

Table 20-6 Amplitude Accuracy Results (Option P03, P08, P13, P26)

Nominal Source Amplitude (dBm)	Low- band Preamp	Res BW (kHz)	Span (kHz)	Measured Amplitude Meas_amp (dBm)	Power Meter Amplitude Power_meter (dBm)	Amplitude Accuracy Error (dB)	Test Limit (dB)
-13	ON	1	106				±1.30 dB

Frequency Response (Flatness)

Test Limits

Frequency Range	Limit Relative to 50 MHz
20 Hz to 3.6 GHz	±1.5 dB
> 3.6 GHz to 8.4 GHz	±2.5 dB
> 8.4 GHz to 13.6 GHz	±3.0 dB
> 13.6 GHz to 26.5 GHz	±3.5 dB
> 26.5 GHz to 34.5 GHz	±3.5 dB
> 34.5 GHz to 50 GHz	±4.2 dB

The frequency response test measures the signal analyzer's amplitude error as a function of the tuned frequency. Measurements are made ranging from 50 MHz to the maximum frequency range of your analyzer. The signal source amplitude is measured with a power meter to eliminate error due to source flatness. The measured value is normalized to 50 MHz.

Item	Critical Specifications (for this test)	Recommended Keysight Model
Adapter Type N (m) to 3.5 mm (m)	Frequency: 10 MHz to 18 GHz VSWR: < 1.1:1	1250-1743
Adapter, 3.5 mm (f) to 3.5 mm (f)	Frequency: 10 MHz to 26.5 GHz VSWR: < 1.1:1	83059B
Cable, 3.5 mm, 1 meter (Opt 503, 508, 513, 526)	Frequency: 10 MHz to 26.5 GHz VSWR: < 1.4:1	11500E
Cable, 2.4 mm, 1 meter (Opt 544, 550)	Frequency: 10 MHz to 50 GHz VSWR: < 1.55:1	8120-6164
Cables, BNC 120 cm	Frequency: 10 MHz	10503A
Power Meter	Compatible with power sensor	E4418B
Power Sensor (Opt 503, 508, 513, 526)	Frequency Range: 50 MHz to 26.5 GHz	8485A
Power Sensor (Opt 544, 550)	Frequency Range: 50 MHz to 50 GHz	8487A

Item	Critical Specifications (for this test)	Recommended Keysight Model
Power Splitter (Opt 503, 508, 513, 526)	Frequency Range: 50 MHz to 26.5 GHz Tracking between ports: < 0.25 dB	11667B
Power Splitter (Opt 544, 550)	Frequency Range: 50 MHz to 50 GHz Tracking between ports: < 0.40 dB	11667C
Synthesized Sweeper	Frequency Range: 50 MHz to 50 GHz[a]	PSG

a. Maximum frequency of the sweeper must be greater than or equal to maximum specified frequency of the PXA.

Figure 20-5 Frequency Response Test Setup

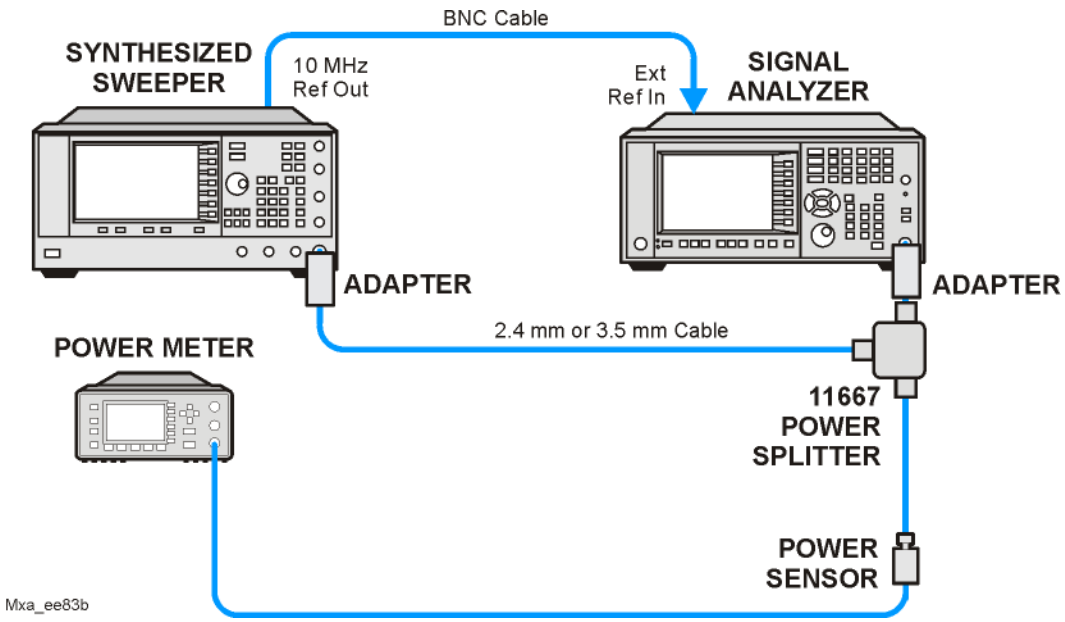

Procedure

1. Zero and calibrate the power meter and power sensor as described in the power meter operation manual.
2. Configure the equipment as shown in Figure 20-5.

NOTE Connect the power splitter to the signal analyzer input using the appropriate adapter. Do not use a cable. An adapter will only be necessary if the PXA input connector is Type-N.

3. Assure the signal analyzer's built-in auto alignment has been performed within the last 24 hours.

4. Press **Mode**, **Spectrum Analyzer**, **Mode Preset** on the signal analyzer, and press **Preset** on the synthesized sweeper.
5. Set up the synthesized sweeper by pressing:

   CW, 50, **MHz**
   Power level, –4, **dBm**

6. Set up the signal analyzer by pressing:

   Input/Output, **More**, **Freq Ref In**, **External**
   FREQ Channel, Center Freq, 50, **MHz**
   Span X Scale, Span, 50, **kHz**
   AMPTD Y Scale, **Ref Level**, 0, **dBm**

7. Adjust the synthesized sweeper output power for a power meter reading of –10 dBm ±0.1 dB.
8. On the signal analyzer, press **Single**.
9. Press the **Peak Search** key on the signal analyzer to position the marker on the peak of the signal.
10. Refer to Table 20-7, "Frequency Response (Flatness) Results." Enter the amplitude of the signal displayed on the signal analyzer into the $Meas_{Amp}$ column of Table 20-7.
11. Enter the power meter reading into the $Power_{Meter}$ column of Table 20-7.
12. Tune the synthesized sweeper and signal analyzer to the next frequency listed in Table 20-7.
13. Enter the power sensor calibration factor into the power meter.
14. For frequencies 3.6 GHz and above, press **AMPTD Y Scale**, then **Presel Center** to center the preselector filter for an optimum amplitude measurement.
15. Repeat step 7 through step 14 and complete the remainder of Table 20-7 for the frequency range of your analyzer.
16. Compute the measurement error ($Meas_{Error} = Meas_{Amp} - Power_{Meter}$).
17. Compute the flatness error normalized to 50 MHz:
    ($Meas_{Error}$ - $Meas_{Error}$ @ 50 MHz)
18. Enter the computed flatness error value into the $Flat_{Norm}$ column of Table 20-7.
19. Compare the value of $Flat_{Norm}$ to the test limit.

Table 20-7 Frequency Response (Flatness) Results

Center Frequency	Analyzer Amplitude $Meas_{amp}$	Power Meter Measurement $Power_{meter}$	Meas Error $Meas_{error}$	Flatness Normalized to 50 MHz $Flat_{Norm}$	Flatness Error Test Limits (dB)
50 MHz				0	Ref
1 GHz					±1.5 dB
2 GHz					1.5 dB
3 GHz					±1.5 dB
3.5 GHz					±1.5 dB
4 GHz					±2.5 dB
6 GHz					±2.5 dB
8 GHz					±2.5 dB
9 GHz					±3.0 dB
11 GHz					±3.0 dB
13 GHz					±3.0 dB
14 GHz					±3.5 dB
17 GHz					±3.5 dB
20 GHz					±3.5 dB
23 GHz					±3.5 dB
26 GHz					±3.5 dB
29 GHz					±3.5 dB
32 GHz					±3.5 dB
35 GHz					±4.2 dB
38 GHz					±4.2 dB
41 GHz					±4.2 dB
42.5 GHz					±4.2 dB
43.5 GHz					±4.2 dB
46.5 GHz					±4.2 dB
49.5 GHz					±4.2 dB

Frequency Response (Flatness), Preamp On

Test Limits

Frequency Range	Limit Relative to 50 MHz
100 kHz to 3.6 GHz	±2.0 dB
> 3.6 GHz to 8.4 GHz	±3.0 dB
> 8.4 GHz to 13.6 GHz	±3.5 dB
> 13.6 GHz to 26.5 GHz	±4.0 dB
> 26.5 GHz to 34.5 GHz	±4.0 dB
> 34.5 GHz to 50 GHz	±5.0 dB

The frequency response test, with preamplifier on, measures the signal analyzer's amplitude error as a function of the tuned frequency. Measurements are made ranging from 50 MHz to the maximum frequency range of the preamp. The signal source amplitude is measured with a power meter to eliminate error due to source flatness. The measured value is normalized to 50 MHz.

Item	Critical Specifications (for this test)	Recommended Keysight Model
Adapter Type N (m) to 3.5 mm (m)	Frequency: 10 MHz to 18 GHz VSWR: < 1.1:1	1250-1743
Adapter 3.5 mm (f) to 3.5 mm (f)	Frequency: 10 MHz to 26.5 GHz VSWR: < 1.1:1	83059B
Cable, 3.5 mm, 1 meter (Opt P03, P08, P13, P26)	Frequency: 10 MHz to 26.5 GHz VSWR: < 1.4:1	11500E
Cable, 2.4 mm, 1 meter (Opt P43, P44, P50)	Frequency: 10 MHz to 50 GHz VSWR: < 1.55:1	8120-6164
Cables, BNC 120 cm	Frequency: 10 MHz	10503A
Power Meter	Compatible with power sensor	E4418B
Attenuator, 30 dB Fixed	Frequency: 50 MHz Accuracy: ±0.05 dB	11708A

Item	Critical Specifications (for this test)	Recommended Keysight Model
Power Sensor (Opt P03, P08, P13, P13)	Frequency Range: 50 MHz to 26.5 GHz Amplitude Range: –65 dBm to –55 dBm	8485D
Power Sensor (Opt P43, P44, P50)	Frequency Range: 50 MHz to 50 GHz Amplitude Range: –65 dBm to –55 dBm	8487D
Power Splitter (Opt P03, P08, P13, P13)	Frequency Range: 50 MHz to 26.5 GHz Tracking between ports: < 0.25 dB	11667B
Power Splitter (Opt P43, P44, P50)	Frequency Range: 50 MHz to 50 GHz Tracking between ports: < 0.40 dB	11667C
Synthesized Sweeper	Frequency Range: 50 MHz to 50 GHz[a]	PSG

a. Maximum frequency of the sweeper must be equal to or greater than the maximum frequency of the preamplifier option.

Figure 20-6 Frequency Response Test Setup

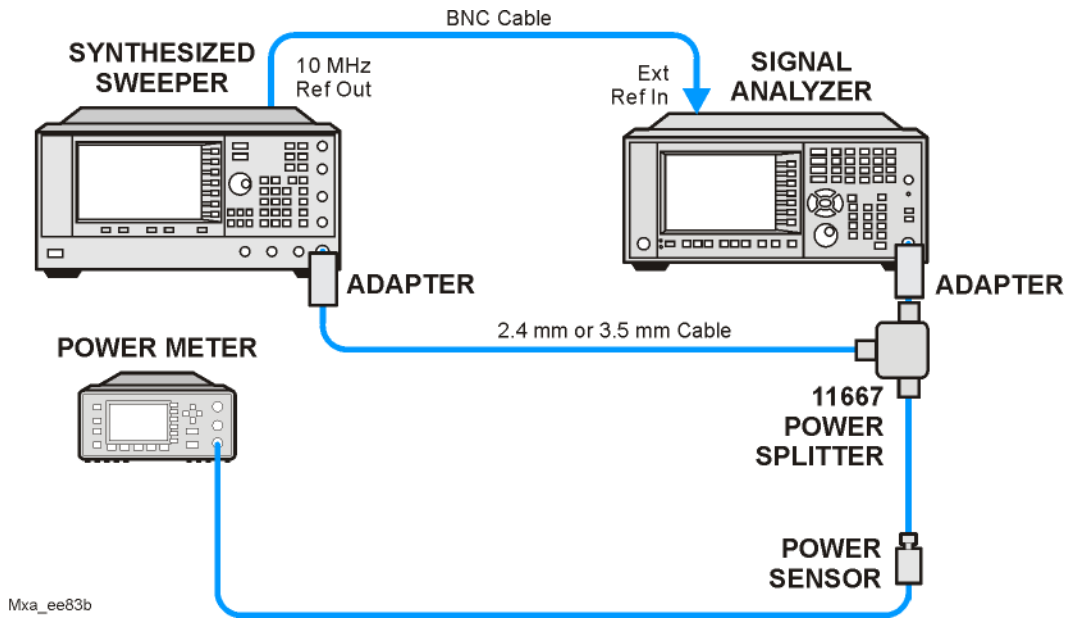

Procedure

1. Zero and calibrate the power meter and power sensor as described in the power meter operation manual.

2. Configure the equipment as shown in Figure 20-5.

NOTE

Connect the power splitter to the signal analyzer input using the appropriate adapter. Do not use a cable. An adapter will only be necessary if the PXA input connector is Type-N.

3. Assure the signal analyzer's built-in auto alignment has been performed within the last 24 hours.
4. Press **Mode**, **Spectrum Analyzer**, **Mode Preset** on the signal analyzer, and press **Preset** on the synthesized sweeper.
5. Set up the synthesized sweeper by pressing:

   CW, 50, **MHz**
   Power level, –54, **dBm**

6. Set up the signal analyzer by pressing:

   Input/Output, **More**, **Freq Ref In**, **External**
   FREQ Channel, Center Freq, 50, **MHz**
   Span X Scale, Span, 50, **kHz**
   AMPTD Y Scale, **More**, **Internal Preamp Full Range**
   AMPTD Y Scale, **Attenuation**, **Mech Atten**, 0, **dB**
   AMPTD Y Scale, **Ref Level**, –55, **dBm**

7. Adjust the synthesized sweeper output power for a power meter reading of –60 dBm ±0.1 dB.
8. On the signal analyzer, press **Single**.
9. Press the **Peak Search** key on the signal analyzer to position the marker on the peak of the signal.
10. Refer to Table 20-7, "Frequency Response (Flatness) Results." Enter the amplitude of the signal displayed on the signal analyzer into the $Meas_{Amp}$ column of Table 20-7.
11. Enter the power meter reading into the $Power_{Meter}$ column of Table 20-7.
12. Tune the synthesized sweeper and signal analyzer to the next frequency listed in Table 20-7.
13. Enter the power sensor calibration factor into the power meter.
14. For frequencies 3.6 GHz and above, press **AMPTD Y Scale**, then **Presel Center** to center the preselector filter for an optimum amplitude measurement.
15. Repeat step 7 through step 14 and complete the remainder of Table 20-7 for the frequency range of your preamp.
16. Compute the measurement error ($Meas_{Error} = Meas_{Amp} - Power_{Meter}$).

17. Compute the flatness error normalized to 50 MHz:
    ($Meas_{Error}$ - $Meas_{Error}$ @ 50 MHz)
18. Enter the computed flatness error value into the $Flat_{Norm}$ column of Table 20-7.
19. Compare the value of $Flat_{Norm}$ to the test limit.

Table 20-8 Frequency Response (Flatness) Results

Center Frequency	Analyzer Amplitude $Meas_{amp}$	Power Meter Measurement $Power_{meter}$	Meas Error $Meas_{error}$	Flatness Normalized to 50 MHz $Flat_{Norm}$	Flatness Error Test Limits (dB)
50 MHz				0	Ref
1 GHz					±2.0 dB
2 GHz					±2.0 dB
3 GHz					±2.0 dB
3.5 GHz					±2.0 dB
4 GHz					±3.0 dB
6 GHz					±3.0 dB
8 GHz					±3.0 dB
9 GHz					±3.5 dB
11 GHz					±3.5 dB
13 GHz					±3.5 dB
14 GHz					±4.0 dB
17 GHz					±4.0 dB
20 GHz					±4.0 dB
23 GHz					±4.0 dB
26 GHz					±4.0 dB
29 GHz					±4.0 dB
32 GHz					±4.0 dB
35 GHz					±5.0 dB
38 GHz					±5.0 dB
41 GHz					±5.0 dB
42.5 GHz					±5.0 dB
43.5 GHz					±5.0 dB

Table 20-8 Frequency Response (Flatness) Results

Center Frequency	Analyzer Amplitude $Meas_{amp}$	Power Meter Measurement $Power_{meter}$	Meas Error $Meas_{error}$	Flatness Normalized to 50 MHz $Flat_{Norm}$	Flatness Error Test Limits (dB)
46.5 GHz					±5.0 dB
49.5 GHz					±5.0 dB

Scale Fidelity

Test Limits

The scale fidelity error will be £ ±1.0 dB with £ -10 dBm at the mixer.

This test checks the scale fidelity of the instrument by maintaining a constant reference level and measuring signals of different amplitudes over most of the display range. This test sets the input attenuator to 10 dB and the Reference Level to 0 dBm. The external attenuator is set to 0 dB, and the amplitude of the source is adjusted to set the displayed signal at the reference level.

The instrument's internal marker is used to measure the reference amplitude. The Marker Delta function is activated and the RF input is reduced using the external precision step attenuator. Signal input levels from 0 dBm to -50 dBm are measured.

Item	Critical Specifications (for this test)	Recommended Keysight Model
Adapter Type-N (m) to 3.5 mm (f)	Frequency: 10 MHz to 18 GHz VSWR: < 1.1:1	1250-1745
Adapter 3.5 mm (f) to 3.5 mm (f)	Frequency: 10 MHz to 26.5 GHz VSWR: < 1.1:1	83059B
Attenuator, 10 dB Step	Range: 0-50 dB Frequency: 50 MHz Accuracy: ±0.25 dB	8495A
Attenuator, 10 dB fixed (2 required)	Frequency: 50 MHz VSWR: < 1.2:1	8493C, Option 010
Cable, 3.5 mm, 1 meter (2 required)	Frequency: 10 MHz to 26.5 GHz VSWR: < 1.4:1	11500E
Cable, BNC 120 cm	Frequency: 10 MHz	10503A
Synthesized Sweeper	Output Level Accuracy: 0 to –15 dBm: ±1.0 dB	PSG

Figure 20-7 Scale Fidelity Setup

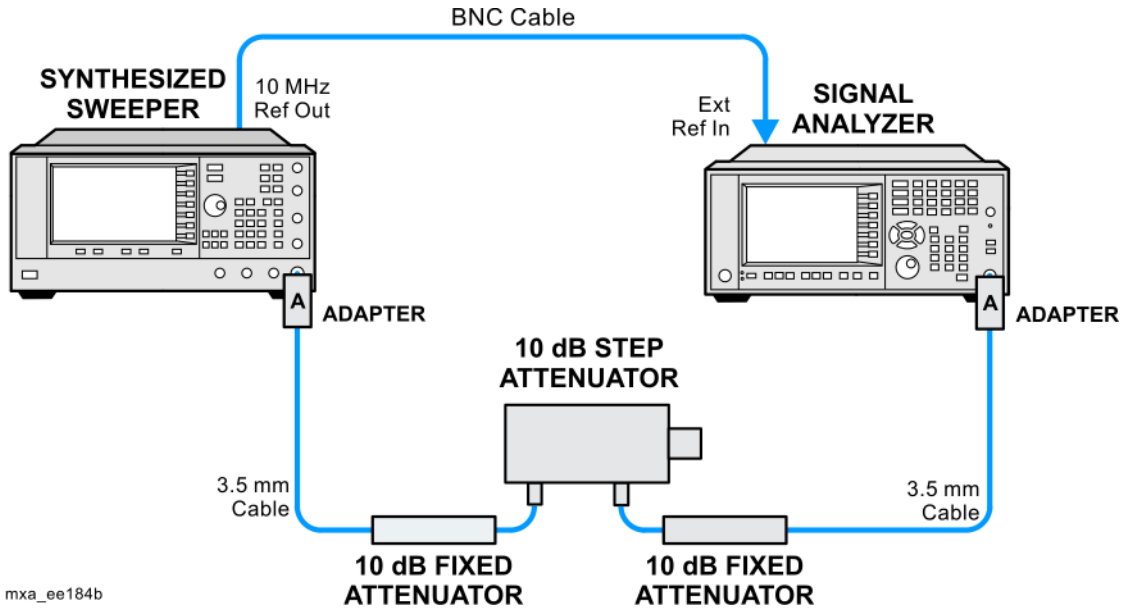

NOTE Averaging is used for all measurements to improve repeatability and reduce measurement uncertainty.

Procedure

1. Configure the equipment as shown in Figure 20-7.
2. Preset the Source and press **Mode**, **Spectrum Analyzer**, **Mode Preset** on the analyzer.
3. Set up the synthesized sweeper by pressing:

   Frequency, 50, **MHz**
   Amplitude, +5, **dBm**
   RF On/Off, On

4. Set up the signal analyzer by pressing:

   Input/Output, **More**, **Freq Ref In**, **External**
   FREQ Channel, Center Freq, 50, **MHz**
   Span X Scale, Span, **1, MHz**
   AMPTD Y Scale, Ref Level, 0, **dBm**
   Meas Setup, Average/Hold Number, 10, **Enter**
   Trace/Detector, Trace Average
   Peak Search

5. Set the external 10 dB step attenuator to 0 dB.
6. Adjust the amplitude on the signal source until the marker amplitude on the analyzer reads –15 dBm ± 0.2 dB.
7. On the analyzer, press the **Single**, **Restart** to trigger a 10 sweep average.

8. On the analyzer, activate the Marker Delta function by pressing **Peak Search**, **Marker Delta**.
9. Perform the following steps for each attenuator setting listed in the table below:
    a. Select the next External attenuator setting.
    b. Press the **Restart** key to trigger a 10 sweep average.
    c. Enter the delta marker value into Table 20-9.
    d. Check delta marker reading against the test limits.

Table 20-9 Scale Fidelity Results

External Attenuator Setting	Minimum (dB)	Marker Delta Value (dB)	Maximum (dB)
0	N/A	Reference	N/A
10	–11.0		–9.0
20	–21.0		–19.0
30	–31.0		–29.0
40	–41.0		–39.0
50	–51.0		–49.0

BBIQ Input Frequency Response (Option BBA only)

Test Limits

Frequency Range	Limit Relative to 250 kHz
Frequency Range	Limit Relative to 250 kHz
250 kHz to 10 MHz (Standard)	± 1.75 dB
250 kHz to 25 MHz (Option B25)	± 1.75 dB
250 kHz to 40 MHz (Option S40 or SU1)	± 1.75 dB

This procedure tests the amplitude response of each of the BBIQ inputs versus frequency. For each input, a reference measurement is made at 250 kHz and then subsequent measurements are made at several frequencies up to the maximum IQ bandwidth. The amplitude difference between the measurement at 250 kHz and subsequent frequencies is calculated and compared to the test limit.

Item	Critical Specifications	Recommended Keysight Model
RF Signal Generator	Frequency: 250 kHz to 40 MHz Amplitude: ~–10 dBm Flatness: < ±0.75 dB	E4438C
Cable, BNC	Connectors: BNC male Length: 23 cm (9 in) max	10502A
Cable, BNC, 120 cm	Connectors: BNC male Frequency: 250 kHz to 40 MHz	10503A
50 Ohm Termination	Connector: BNC male Frequency: 250 kHz to 40 MHz	11593A

Figure 20-8 BBIQ Input Frequency Response Setup (I Input)

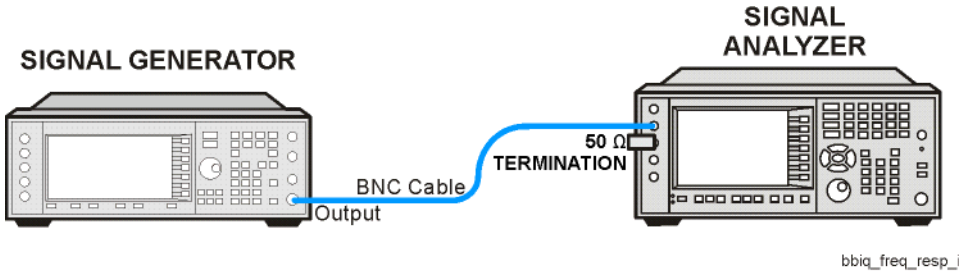

Figure 20-9 BBIQ Input Frequency Response Setup (I Input)

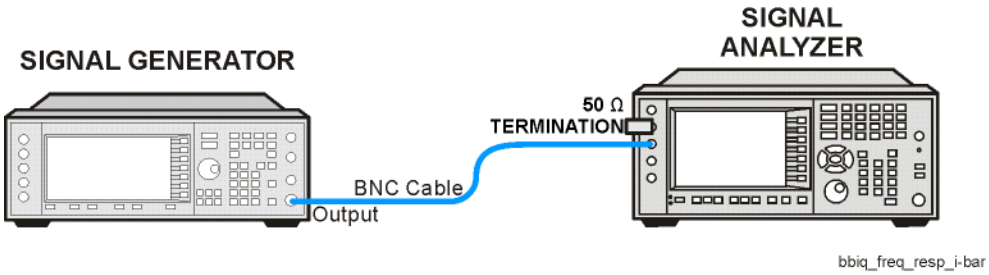

Figure 20-10 BBIQ Input Frequency Response Setup (Q Input)

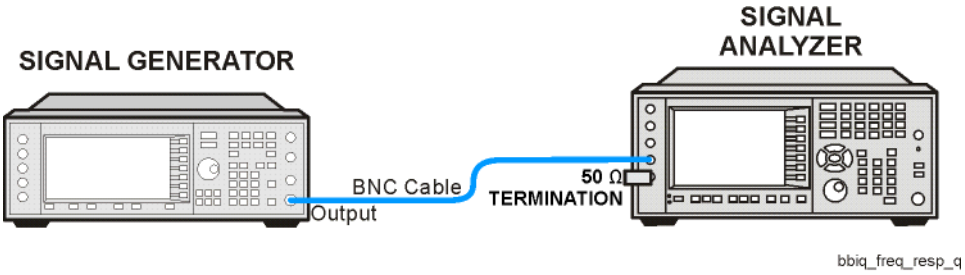

Figure 20-11 BBIQ Input Frequency Response Setup (Q Input)

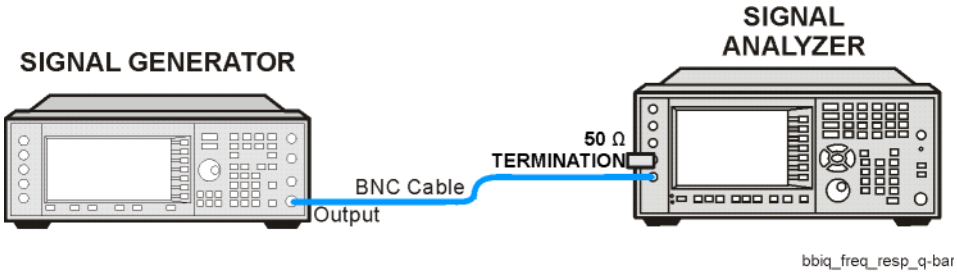

Procedure

1. On the X-Series analyzer, press **Mode**, **IQ Analyzer** (Basic). Press **Mode Preset**.
2. Press **Input/Output**, **I/Q** (to change to I/Q inputs), **I/Q** (to bring up the I/Q input menu), **I/Q Cable Calibrate**. Follow the instructions on screen. Use the short BNC cable listed above to perform the calibration. This process has several steps and will take about 3 minutes to perform.
3. Press **I/Q Path**, **I+jQ**, **I Setup**, **Differential** (On). Press **Return**, **Q Setup**, **Q Same as I** (Yes).
4. Preset the RF Signal Generator and set the controls as follows:

Frequency	250 kHz
Amplitude	–10 dBm
RF	On

NOTE Once the RF Signal Generator's Amplitude is set, do not change the RF Signal Generator's Amplitude setting during the rest of this procedure.

5. Connect the longer BNC cable between the RF Signal Generator's RF OUTPUT and the I input of the X-Series analyzer, see Figure 20-8
6. Connect the 50 Ohm termination to the I input of the X-Series analyzer, see Figure 20-8
7. Press **Mode Preset** on the X-Series analyzer. Press **System**, **Show System**. Note if either of the options listed below are present:

   N9030B-B25
   N9030B-S40
   N9030B-B40

8. If none of the options listed in step 7 are present, the maximum IQ bandwidth is 10 MHz
9. If N9030B-B25 is present, but N9030B-S40 and N9030B-B40 are not present, the maximum IQ bandwidth is 25 MHz
10. If either N9030B-S40 or N9030B-B40 is present, the maximum IQ bandwidth is 40 MHz.
11. Press **FREQ** on the X-Series analyzer and set the Center Freq equal to one half the maximum IQ bandwidth determined above. For example, if the maximum IQ bandwidth is 40 MHz, set the Center Freq to 20 MHz.
12. Press **Span** on the X-Series analyzer and set the Span equal to the maximum IQ bandwidth determined above.
13. Press **BW** on the X-Series analyzer and set the Res BW to 100 kHz.

14. Press **Peak Search** on the X-Series analyzer. Record the marker amplitude reading in Table 20-10 for the I Input at 250 kHz.

15. Set the RF Signal Generator to each of the remaining frequencies listed in Table 20-10, up to the maximum IQ bandwidth of the X-Series analyzer. At each frequency, do the following:

    a. Press **Peak Search**

    b. Record the marker amplitude reading in Table 20-10 for the I Input at the current RF Signal Generator frequency

Table 20-10 BBIQ Input Frequency Response, I and I Inputs

RF Signal Generator Frequency	I Input		I Input		Test Limits
	Marker Amplitude	Frequency Response	Marker Amplitude	Frequency Response	
250 kHz		0.0 dB		0.0 dB	±1.75 dB
2 MHz					±1.75 dB
5 MHz					±1.75 dB
7.5 MHz					±1.75 dB
9.9 MHz					±1.75 dB
Stop here if Maximum IQ Bandwidth is 10 MHz					
12.5 MHz					±1.75 dB
15 MHz					±1.75 dB
17.5 MHz					±1.75 dB
20 MHz					±1.75 dB
22.5 MHz					±1.75 dB
24.9 MHz					±1.75 dB
Stop here if Maximum IQ Bandwidth is 25 MHz					
30 MHz					±1.75 dB
35 MHz					±1.75 dB
39.9 MHz					±1.75 dB

16. Set the RF Signal Generator frequency to 250 kHz
17. Connect the BNC Cable between the RF Signal Generator RF Output and the I input on the X-Series analyzer, see Figure 20-9
18. Connect the 50 Ohm termination to the I input on the X-Series analyzer, see Figure 20-9
19. Press **Peak Search** on the X-Series analyzer. Record the marker amplitude reading in Table 20-10 for the I Input at 250 kHz.
20. Set the RF Signal Generator to each of the remaining frequencies listed in Table 20-10, up to the maximum IQ bandwidth of the X-Series analyzer. At each frequency, do the following:
    a. Press **Peak Search**
    b. Record the marker amplitude reading in Table 20-10 for the I Input at the current RF Signal Generator frequency
21. Connect the BNC Cable between the RF Signal Generator RF Output and the Q input on the X-Series analyzer, see Figure 20-10
22. Connect the 50 Ohm termination to the Q input on the X-Series analyzer, see Figure 20-10
23. Set the RF Signal Generator frequency to 250 kHz.
24. Press **Peak Search** on the X-Series analyzer. Record the marker amplitude reading in Table 20-11 for the Q Input at 250 kHz.
25. Set the RF Signal Generator to each of the remaining frequencies listed in Table 20-11, up to the maximum IQ bandwidth of the X-Series analyzer. At each frequency, do the following:

    Press **Peak Search**

    Record the marker amplitude reading in Table 20-11 for the Q Input at the current RF Signal Generator frequency

Table 20-11 BBIQ Input Frequency Response, Q and Q Inputs

RF Signal Generator Frequency	Q Input		Q Input		Test Limits
	Marker Amplitude	Frequency Response	Marker Amplitude	Frequency Response	
250 kHz		0.0 dB		0.0 dB	±1.75 dB
2 MHz					±1.75 dB
5 MHz					±1.75 dB
7.5 MHz					±1.75 dB
9.9 MHz					±1.75 dB
Stop here if Maximum IQ Bandwidth is 10 MHz					

Table 20-11 BBIQ Input Frequency Response, Q and Q Inputs

RF Signal Generator Frequency	Q Input		Q Input		Test Limits
	Marker Amplitude	Frequency Response	Marker Amplitude	Frequency Response	
12.5 MHz					±1.75 dB
15 MHz					±1.75 dB
17.5 MHz					±1.75 dB
20 MHz					±1.75 dB
22.5 MHz					±1.75 dB
24.9 MHz					±1.75 dB
Stop here if Maximum IQ Bandwidth is 25 MHz					
30 MHz					±1.75 dB
35 MHz					±1.75 dB
39.9 MHz					±1.75 dB

26. Set the RF Signal Generator frequency to 250 kHz

27. Connect the BNC Cable between the RF Signal Generator RF Output and the Q input on the X-Series analyzer, see Figure 20-11

28. Connect the 50 Ohm termination to the Q input on the X-Series analyzer, see Figure 20-11

29. Press **Peak Search** on the X-Series analyzer. Record the marker amplitude reading in Table 20-11 for the Q Input at 250 kHz.

30. Set the RF Signal Generator to each of the remaining frequencies listed in Table 20-11, up to the maximum IQ bandwidth of the X-Series analyzer. At each frequency, do the following:

a. Press **Peak Search**

b. Record the marker amplitude reading in Table 20-11 for the Q Input at the current RF Signal Generator frequency

31. In Table 20-10 and Table 20-11, calculate the Frequency Response for each input by subtracting the Marker Amplitude at 250 kHz for that input from the Marker Amplitude for each frequency greater than 250 kHz.

Frequency Response = Marker Amplitude (Freq > 250 kHz) – Marker Amplitude (250 kHz)

32. Compare the Frequency Response values to the Test Limits.

21 Instrument Software

What You Will Find in This Chapter

Instrument Software Overview on page 616

Software Licensing on page 616

Software Updates on page 617

Instrument Measurement Application Software on page 617

89600 VSA Software on page 617

Instrument Software Overview

The instrument software, installed in every instrument, contains not only the spectrum analyzer measurement application, but also all of the other currently available measurement applications. However, only the licensed applications will be seen and available for use.

To view the currently licensed measurement applications press **System**, **Show System**. In addition to listing the application model number and description you will also see the revision of each. However, the complete package itself also has a revision associated with it, which can also be found on this screen as the “Instrument S/W Revision”.

Since the instrument application software is distributed in one complete package, when an update is installed they are all updated at the same time. One of the benefits of this is that you cannot have revisions that are incompatible with each other installed in an instrument. However, there is one exception to this, which would be the 89601A VSA software. While the latest revision of the 89601A VSA software is installed in each instrument as it left the factory, it must be updated, and kept in sync with the rest of the instrument application software independently.

Software Licensing

All application software needs to have a valid license in order to be available for use. This also includes the spectrum analyzer application (N9060A).

Software Updates

Instrument Measurement Application Software

Updates are installed much like most other types of commercial software packages. The latest revision of the software, along with complete installation instructions, can be obtained by one of two methods, which are:

Web Download:

The latest revision of the software can be downloaded from:

www.keysight.com/find/xseries_software

89600 VSA Software

Updates for the 89600 VSA software can be downloaded from:

http://www.keysight.com/find/89600_VSA_sw_download

The revision of the 89600 VSA software must be compatible with the revision of the instrument measurement application software package that is installed in the instrument. To determine what revisions are compatible, and if a further updates are required, please see the software compatibility information on the instrument measurement application software download web page listed above.

This information is subject to change without notice.
© Keysight Technologies 2016-2025

Edition 1, July 2026

N9030-90071

www.keysight.com