34450A 5½ Digit Multimeter

KEYSIGHT

SERVICE GUIDE

Notices

Copyright Notice

© Keysight Technologies 2012-2025

No part of this manual may be reproduced in any form or by any means (including electronic storage and retrieval or translation into a foreign language) without prior agreement and written consent from Keysight Technologies as governed by United States and international copyright laws.

Manual Part Number

34450-90029

Edition

Edition 9, March 2025

Printed in:

Printed in Malaysia

Published by:

Keysight Technologies
Bayan Lepas Free Industrial Zone,
11900 Penang, Malaysia

Technology Licenses

The hardware and/or software described in this document are furnished under a license and may be used or copied only in accordance with the terms of such license.

Declaration of Conformity

Declarations of Conformity for this product and for other Keysight products may be downloaded from the Web. Go to http://www.keysight.com/go/conformity. You can then search by product number to find the latest Declaration of Conformity.

U.S. Government Rights

The Software is "commercial computer software," as defined by Federal Acquisition Regulation ("FAR") 2.101. Pursuant to FAR 12.212 and 27.405-3 and Department of Defense FAR Supplement ("DFARS") 227.7202, the U.S. government acquires commercial computer software under the same terms by which the software is customarily provided to the public. Accordingly, Keysight provides the Software to U.S. government customers under its standard commercial license, which is embodied in its End User License Agreement (EULA), a copy of which can be found at http://www.keysight.com/find/sweula. The license set forth in the EULA represents the exclusive authority by which the U.S. government may use, modify, distribute, or disclose the Software. The EULA and the license set forth therein, does not require or permit, among other things, that Keysight: (1) Furnish technical information related to commercial computer software or commercial computer software documentation that is not customarily provided to the public; or (2) Relinquish to, or otherwise provide, the government rights in excess of these rights customarily provided to the public to use, modify, reproduce, release, perform, display, or disclose commercial computer software or commercial computer software documentation. No additional government requirements beyond those set forth in the EULA shall apply, except to the extent that those terms, rights, or licenses are explicitly required from all providers of commercial computer software pursuant to the FAR and the DFARS and are set forth specifically in writing elsewhere in the EULA. Keysight shall be under no obligation to update, revise or otherwise modify the Software. With respect to any technical data as defined by FAR 2.101, pursuant to FAR 12.211 and 27.404.2 and DFARS 227.7102, the U.S. government acquires no greater than Limited Rights as defined in FAR 27.401 or DFAR 227.7103-5 (c), as applicable in any technical data.

Warranty

THE MATERIAL CONTAINED IN THIS DOCUMENT IS PROVIDED "AS IS," AND IS SUBJECT TO BEING CHANGED, WITHOUT NOTICE, IN FUTURE EDITIONS. FURTHER, TO THE MAXIMUM EXTENT PERMITTED BY APPLICABLE LAW, KEYSIGHT DISCLAIMS ALL WARRANTIES, EITHER EXPRESS OR IMPLIED, WITH REGARD TO THIS MANUAL AND ANY INFORMATION CONTAINED HEREIN, INCLUDING BUT NOT LIMITED TO THE IMPLIED WARRANTIES OF MERCHANTABILITY AND FITNESS FOR A PARTICULAR PURPOSE. KEYSIGHT SHALL NOT BE LIABLE FOR ERRORS OR FOR INCIDENTAL OR CONSEQUENTIAL DAMAGES IN CONNECTION WITH THE FURNISHING, USE, OR PERFORMANCE OF THIS DOCUMENT OR OF ANY INFORMATION CONTAINED HEREIN. SHOULD KEYSIGHT AND THE USER HAVE A SEPARATE WRITTEN AGREEMENT WITH WARRANTY TERMS COVERING THE MATERIAL IN THIS DOCUMENT THAT CONFLICT WITH THESE TERMS, THE WARRANTY TERMS IN THE SEPARATE AGREEMENT SHALL CONTROL.

Safety Information

CAUTION

A CAUTION notice denotes a hazard. It calls attention to an operating procedure, practice, or the like that, if not correctly performed or adhered to, could result in damage to the product or loss of important data. Do not proceed beyond a CAUTION notice until the indicated conditions are fully understood and met.

WARNING

A WARNING notice denotes a hazard. It calls attention to an operating procedure, practice, or the like that, if not correctly performed or adhered to, could result in personal injury or death. Do not proceed beyond a WARNING notice until the indicated conditions are fully understood and met.

Safety Symbols

The following symbols on the instrument and in the documentation indicate precautions that must be taken to maintain safe operation of the instrument.

⏚	Earth (ground) terminal	⚠	Caution, risk of electric shock
⏚	Frame or chassis (ground) terminal	⚠	Caution, risk of danger (refer to this manual for specific Warning or Caution information)
CAT II 300 V	IEC Measurement Category II. Inputs may be connected to mains (up to 300 VAC) under Category II overvoltage conditions.		

Regulatory Markings

CE ISM 1-A	The CE mark is a registered trademark of the European Community. This CE mark shows that the product complies with all the relevant European Legal Directives.		The RCM mark is a registered trademark of the Australian Communications and Media Authority.
ICES/NMB-001	ICES/NMB-001 indicates that this ISM device complies with the Canadian ICES-001. Cet appareil ISM est conforme a la norme NMB-001 du Canada.		This instrument complies with the WEEE Directive (2002/96/EC) marking requirement. This affixed product label indicates that you must not discard this electrical or electronic product in domestic household waste.
C US	The CSA mark is a registered trademark of the Canadian Standards Association.	40	This symbol indicates the time period during which no hazardous or toxic substance elements are expected to leak or deteriorate during normal use. Forty years is the expected useful life of the product.

General Safety Information

The following general safety precautions must be observed during all phases of operation, service, and repair of this instrument. Failure to comply with these precautions or with specific warnings elsewhere in this manual violates safety standards of design, manufacture, and intended use of the instrument. Keysight Technologies assumes no liability for the customer's failure to comply with these requirements.

WARNING

- Do not defeat the power cord safety ground feature. Plug in to a grounded (earthed) outlet.
- Do not use the instrument in any manner that is not specified by the manufacturer.
- To avoid electric shock or injury, do not operate the multimeter without panels or case in place.
- Do not substitute parts or modify the instrument to avoid the danger of introducing additional hazards. Return the instrument to Keysight Technologies Sales and Service Office for service and repair to ensure the safety features are maintained.
- Main Power and Test Input Disconnect: Unplug the instrument from the wall outlet, remove the power cord, and remove all probes from all terminals before servicing. Only qualified, service-trained personnel should remove the cover from the instrument.
- Line and Current Protection Fuses: For continued protection against fire, replace the line fuse and the current-protection fuse only with fuses of the specified type and rating.
- IEC Measurement Category II. The HI and LO input terminals may be connected to mains in IEC Category II installations for line voltages up to 300 VAC. To avoid the danger of electric shock, do not connect the inputs to mains for line voltages above 300 VAC. See "IEC Measurement Category II Overvoltage Protection" on the following page for further information.

WARNING

- Protection limits: To avoid instrument damage and the risk of electric shock, do not exceed any of the Protection Limits defined in the following section.
- If the Test Lead Set is used in a manner not specified by Keysight Technologies, the protection provided by the Test Lead Set may be impaired. Also, do not use a damaged or worn Test Lead Set. Instrument damage or personal injury may result.

Protection Limits

The Keysight 34450A 5½ Digital Multimeter provides protection circuitry to prevent damage to the instrument and to protect against the danger of electric shock, provided that the Protection Limits are not exceeded. To ensure safe operation of the instrument, do not exceed the Protection Limits shown on the front panel, as defined below:

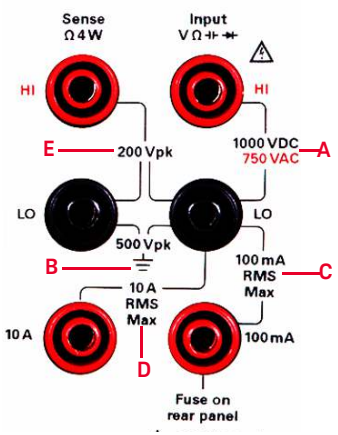

Note: The front-panel terminals and current protection fuse are shown above.

Input Terminal Protection Limits

Protection Limits are defined for the input terminals:

Main Input (HI and LO) Terminals. The HI and LO input terminals are used for voltage, resistance, capacitance, and diode test measurements. Two Protection Limits are defined for these terminals:

HI to LO Protection Limit. The Protection Limit from HI to LO ("A" in the figure above) is 1000 VDC or 750 VAC, which is also the maximum voltage measurement. This limit can also be expressed as 1000 Vpk maximum.

LO to Ground Protection Limit. The LO input terminal can safely "float" a maximum of 500 Vpk relative to ground. This is Protection Limit "B" in the figure.

Although not shown on the figure, the Protection Limit for the HI terminal is a maximum of 1000 Vpk relative to the ground. Therefore, the sum of the "float" voltage and the measured voltage must not exceed 1000 Vpk

Current Input Terminal. The current input ("I") terminal has a Protection Limit of 100 mA (rms) maximum current flowing from the LO input terminal. This is Protection Limit "C" in the figure. Note that the current input terminal will be at approximately the same voltage as the LO terminal.

Note: The current-protection circuitry includes a fuse on the back panel. To maintain protection, replace this fuse only with a fuse of the specified type and rating.

10 A Current Input Terminal. The 10 A current input terminal has a Protection Limit of 10 A (rms) maximum current flowing from the LO input terminal. This is Protection Limit "D" in the figure. Note that the current input terminal will be at approximately the same voltage as the LO terminal.

Note: The current-protection circuitry includes an internal fuse. To maintain protection, service-trained personnel should replace this fuse only with a fuse of the specified type and rating.

Sense Terminal Protection Limits

The HI and LO sense terminals are used only for four-wire resistance measurements ("Ω 4W"). The Protection Limit is 200 Vpk for all of the terminal pairings ("E" in the figure):

LO sense to LO input.
HI sense to LO input.
HI sense to LO sense.

Note: The 200 Vpk limit on the sense terminals is the Protection Limit. Operational voltages in resistance measurements aremuch lower - less than 5 V in normal operation.

IEC Measurement Category II Overvoltage Protection

To protect against the danger of electric shock, the Keysight 34450A 5½ Digital Multimeter provides overvoltage protection for line-voltage mains connections meeting *both* of the following conditions:

The HI and LO input terminals are connected to the mains under Measurement Category II conditions, defined below, *and*

The mains are limited to a maximum line voltage of 300 VAC.

IEC Measurement Category II includes electrical devices connected to mains at an outlet on a branch circuit. Such devices include most small appliances, test equipment, and other devices that plug into a branch outlet or socket. The 34450A may be used to make measurements with the HI and LO inputs connected to mains in such devices, or to the branch outlet itself (up to 300 VAC). However, the 34450A may not be used with its HI and LO inputs connected to mains in permanently installed electrical devices such as the main circuit-breaker panel, sub-panel disconnect boxes, or permanently wired motors. Such devices and circuits are subject to overvoltages that may exceed the protection limits of the 34450A.

Note: Voltages above 300 VAC may be measured only in circuits that are isolated from mains. However, transient overvoltages are also present on circuits that are isolated from mains. The 34450A is designed to safely withstand occasional transient overvoltages up to 2500 Vpk. Do not use this multimeter to measure circuits where transient overvoltages could exceed this level.

Environmental Conditions

This instrument is designed for indoor use and in an area with low condensation. The table below shows the general environmental requirements for the instrument.

Environmental condition	Requirement
Operating temperature	Full accuracy at 0 °C to 55 °C
Operating humidity	Full accuracy to 80% RH at 0 °C to 30 °C (non-condensing) Full accuracy to 40% RH at 30 °C to 55 °C (non-condensing)
Storage temperature	–40 °C to 70 °C
Altitude	Operating up to 3,000 meters
Pollution degree	Pollution Degree 2

NOTE

The Keysight 34450A 5½ Digit Multimeter complies with the following EMC and safety requirements:

- IEC 61010-1: 2001 / EN 61010-1: 2001 (2nd Edition)
- IEC 61326-2-1: 2005 / EN61326-2-1: 2006
- CISPR 11: 2003 / EN 55011: 2007 Group 1 Class A
- Canada: ICES/NMB-001: Issue 4, June 2006
- Australia/New Zealand: AS/NZS CISPR 11: 2004

CAUTION

Degradation of some product specifications can occur in the presence of ambient electromagnetic (EM) fields and noise that are coupled to the power line or I/O cables of the instrument. The instrument will self-recover and operate to all specifications when the source of ambient EM field and noise are removed or when the instrument is protected from the ambient EM field or when the instrument cabling is shielded from the ambient EM noise.

Waste Electrical and Electronic Equipment (WEEE) Directive 2002/96/EC

This instrument complies with the WEEE Directive (2002/96/EC) marking requirement. This affixed product label indicates that you must not discard this electrical or electronic product in domestic household waste.

Product category

With reference to the equipment types in the WEEE directive Annex 1, this instrument is classified as a “Monitoring and Control Instrument” product.

The affixed product label is as shown below.

Do not dispose in domestic household waste.

To return this unwanted instrument, contact your nearest Keysight Service Center, or visit http://about.keysight.com/en/companyinfo/environment/takeback.shtml for more information.

Sales and Technical Support

To contact Keysight for sales and technical support, refer to the support links on the following Keysight websites:

- www.keysight.com/find/34450A
  (product-specific information and support, software and documentation updates)
- www.keysight.com/find/assist
  (worldwide contact information for repair and service)

Additional Notices

The Keysight 34450A is provided with a Keysight 34138A Test Lead Set, described below.

Test Lead Ratings

Test Leads - 1000 V, 15 A

Fine Tip Probe Attachments - 300 V, 3 A

Mini Grabber Attachment - 300 V, 3 A

SMT Grabber Attachments - 300 V, 3 A

Operation

The Fine Tip, Mini Grabber, and SMT Grabber attachments plug onto the probe end of the Test Leads.

Maintenance

If any portion of the Test Lead Set is worn or damaged, do not use. Replace with a new Keysight 34138A Test Lead Set.

WARNING **If the Test Lead Set is used in a manner not specified by Keysight Technologies, the protection provided by the Test Lead Set may be impaired. Also, do not use a damaged or worn Test Lead Set. Instrument damage or personal injury may result.**

Table of Contents

Safety Symbols 3
Regulatory Markings 4
General Safety Information 5
Environmental Conditions 8
Waste Electrical and Electronic Equipment (WEEE) Directive 2002/96/EC 9
Product category 9
Sales and Technical Support 9
Additional Notices 10

1 Performance Tests and Calibration

Calibration Overview 18
Closed-case calibration 18
Keysight Technologies calibration services 18
Calibration interval 19
Time required for calibration 19
Automating calibration procedures 19
Recommended Test Equipment 20
Test Considerations 21
Input connections 21
Performance Verification Tests Overview 22
Self test 22
Quick performance check 23
Performance Verification Tests 24
Zero offset verification 24
Gain verification 26
DC current gain verification test 27
Ohms gain verification test 29
Frequency gain verification test 31
AC voltage verification test 32

AC current verification test 34
Capacitance performance verification test 37
Calibration Security 38
Unsecuring the instrument for calibration 39
Calibration Process 41
Using the front panel for adjustments 42
Adjustments 44
Zero adjustment 44
Gain adjustments 44
DC voltage gain adjustment procedure 45
DC current gain adjustments procedure 47
AC voltage gain adjustment procedure 48
AC current gain adjustment procedure 50
Ohms gain adjustment procedure 51
Capacitance gain adjustment procedure 53
Frequency gain adjustment procedure 54
Finishing the adjustments 54
Calibration Message 55
To read the calibration count 55
Calibration Errors 56

2 Disassembly and Repair

Operating Checklist 58
Types of Services Available 59
Repackaging for Shipment 60
Cleaning 60
To Replace the Power Line Fuse 61
To Replace a Current Input Fuse 62
To Verify your Device License 63
Self Test Errors 64
Electrostatic Discharge (ESD) Precautions 65
Mechanical Disassembly 66

Replaceable Parts 73
Rack Mounting 75

List of Tables

Table 1-1 Recommended test equipment 20
Table 1-2 Zero offset verification test 25
Table 1-3 DC voltage gain verification test 27
Table 1-4 DC current gain verification test 28
Table 1-5 Ohms gain verification test 31
Table 1-6 Frequency gain verification test 32
Table 1-7 AC volts verification test 33
Table 1-8 AC current verification test 35
Table 1-9 Capacitance verification test 37
Table 1-10 Valid gain and frequency compensation input values .45
Table 1-11 DC voltage gain adjustment 46
Table 1-12 DC current gain adjustment 47
Table 1-13 AC voltage gain adjustment 49
Table 1-14 AC current gain adjustment 51
Table 1-15 Ohms gain adjustment 52
Table 1-16 Capacitance gain adjustment 53
Table 1-17 Frequency gain adjustment 54
Table 2-1 Self test error numbers 64
Table 2-2 Replaceable parts list 74

THIS PAGE HAS BEEN INTENTIONALLY LEFT BLANK.

1 Performance Tests and Calibration

Calibration Overview 18
Recommended Test Equipment 20
Test Considerations 21
Performance Verification Tests Overview 22
Performance Verification Tests 24
Calibration Security 38
Calibration Process 41
Adjustments 44
Calibration Message 55
Calibration Errors 56

This chapter contains performance test procedures and calibration procedures. The performance test procedures allow you to verify that the multimeter is operating within its published specifications.

WARNING Only service–trained personnel who are aware of the hazards involved should perform the procedures in this chapter. To avoid electrical shock and personal injury, make sure you have read and follow all test equipment safety instructions. Use only completely electric insulated test lead sets with connectors which are out of contact with test voltages.

Calibration Overview

NOTE Make sure you have read "Test Considerations" on page 21 before calibrating the instrument.

Closed-case calibration

The instrument features closed-case electronic calibration. No internal mechanical adjustments are required. The instrument calculates correction factors based upon the input reference value you set. The new correction factors are stored in non-volatile memory until the next calibration adjustment is performed. Non-volatile EEPROM calibration memory does not change when power has been off or after a remote interface reset.

Keysight Technologies calibration services

When your instrument is due for calibration, contact your local Keysight Service Center for a low-cost re-calibration. The 34450A is supported on automated calibration systems, which allow Keysight to provide this service at competitive prices.

Calibration interval

A one year interval is adequate for most applications. Accuracy specifications are warranted only if adjustment is made at regular calibration intervals. Accuracy specifications are not warranted beyond the one year calibration interval. Keysight does not recommend extending calibration intervals beyond two years for any application.

Time required for calibration

The 34450A can be automatically calibrated under computer control. With computer control you can perform the complete calibration procedure and performance verification tests in less than 60 minutes once the instrument is warmed-up (see "Test Considerations" on page 21). Refer to the *34450A Programmer's Reference* online help for more information.

Automating calibration procedures

The adjustment procedures provided in this Service Guide demonstrate front panel adjustment. You can automate the complete verification and adjustment procedures outlined in this manual. You can program the instrument configurations specified for each test over the remote interface. You can then enter read back verification data into a test program and compare the results to the appropriate test limit values. The instrument calibration must be unsecured to perform a calibration.

Recommended Test Equipment

The test equipment recommended for the performance verification and adjustment procedures is listed in Table 1-1 below. If the exact instrument is not available, substitute calibration standards of equivalent accuracy.

A suggested alternate method would be to use the Keysight 3458A 8½ Digit Digital Multimeter to measure less accurate yet stable sources. The output value measured from the source can be entered into the instrument as the target calibration value.

Table 1-1 Recommended test equipment

Application	Recommended Equipment	Recommended Accuracy Requirements
Zero calibration	Fluke 5520A or shorting Plug-Dual banana plug with copper wire short between the two terminals	
DC voltage	Fluke 5520A	<1/5 instrument 1 year spec
DC current	Fluke 5520A	<1/5 instrument 1 year spec
Resistance	Fluke 5520A	<1/5 instrument 1 year spec
AC voltage	Fluke 5520A	<1/5 instrument 1 year spec
AC current	Fluke 5520A	<1/5 instrument 1 year spec
Frequency	Fluke 5520A	<1/5 instrument 1 year spec
Capacitance	Fluke 5520A	<1/5 instrument 1 year spec

Test Considerations

Errors may be induced by AC signals present on the input leads during a self test. Long test leads can also act as an antenna causing pick-up of AC signals.

For optimum performance, all procedures should comply with the following recommendations:

- Assure that the calibration ambient temperature is stable and between 18 °C and 28 °C. Ideally the calibration should be performed at 23 °C ±1 °C.
- Assure ambient relative humidity is less than 80%.
- Allow a two hours warm-up period for performance verification tests and four hours warm-up period for calibration with a shorting plug connected to the **HI** and **LO** input terminals.
- Use shielded twisted pair PTFE-insulated cables to reduce settling and noise errors. Keep the input cables as short as possible.
- Connect the input cable shields to earth ground. Except where noted in the procedures, connect the calibrator **LO** source to earth ground at the calibrator. It is important that the **LO** to earth ground connection be made at only one place in the circuit to avoid ground loops.

Because the instrument is capable of making very accurate measurements, you must take special care to ensure that the calibration standards and test procedures used do not introduce additional errors. Ideally, the standards used to verify and adjust the instrument should be an order of magnitude more accurate than each instrument range full- scale error specification.

For DC voltage, DC current, and resistance gain verification measurements, you should ensure the calibrator's "0" output is correct. You will need to set the offset for each range of the measuring function being verified.

Input connections

Test connections to the instrument are best accomplished using the dual banana plug with copper wire shorted between two terminals for low-thermal offset measurement. Shielded, twisted-pair, PTFE interconnect cables of minimum length are recommended between the calibrator and the multimeter. Cable shields should be earth ground referenced. This configuration is recommended for optimal noises and settling time performance during calibration.

Performance Verification Tests Overview

Use the performance verification tests to verify the measurement performance of the instrument. The performance verification tests use the instrument's specifications listed in the *Keysight 34450A User's Guide*, *Chapter 4, Specifications.*

You can perform four different levels of performance verification tests:

- **Self test.** A series of internal verification tests that give a high confidence that the instrument is operational.
- **Quick verification.** A combination of the internal self tests and selected verification test.
- **Performance verification tests.** An extensive set of tests that are recommended as an acceptance test when you first receive the instrument or after performing adjustments.
- **Optional verification tests.** Tests not performed with every calibration. Perform these tests to verify additional specifications or functions of the instrument.

Self test

- This limited test assures that the instrument is capable of operation. To turn on self test, perform the following steps:

  1 Press Shift > Store/Recall (Utility) to enter the Utility menu.

  2 Use the navigation keys to move the pointer to SELF TEST and press Shift to edit.

  3 Press ▲ or ▼ to select ON.

  4 Press Shift to turn on self test.

- If the self test fails, an error is reported on the front panel. You can also use the `SYSTem: ERRor?` command query from the remote interface. If repair is required, contact a Keysight Service Center.

- If all tests pass, you have a high confidence (~90%) that the instrument is operational.
- You can initiate a more complete self test by sending the `*TST?` command to the instrument. This command returns a “+0” if all the self- tests pass, or a “+1” if a failure occurred. This command may take up to 10 seconds to complete. You may need to set an appropriate interface time-out value.

Quick performance check

The quick performance check is a combination of internal self test and an abbreviated performance test (specified by the letter Q in the performance verification tests). This test provides a simple method to achieve high confidence in the instrument’s ability to functionally operate and meet specifications. These tests represent the absolute minimum set of performance checks recommended following any service activity. Auditing the instrument’s performance for the quick check points (designated by a Q) verifies performance for “normal” accuracy drift mechanisms. This test does not check for abnormal component failures.

To perform the quick performance check, do the following:

- Perform a self test as described in the preceding section.
- Perform only the performance verification tests indicated in the following tables with the letter Q.

If the instrument fails the quick performance check, adjustment or repair is required.

Performance Verification Tests

The performance verification tests are recommended as acceptance tests when you first receive the instrument. The acceptance test results should be compared against the one year test limits. After acceptance, you should repeat the performance verification tests at every calibration interval.

If the instrument fails performance verification, adjustment or repair is required.

Adjustment is recommended at every calibration interval. If adjustment is not made, you must establish a 'guard band', using no more than 80% of the specifications, as the verification limits.

NOTE **Ensure that you have read the "Test Considerations" on page 21 before running the performance verification tests.**

Zero offset verification

This test is used to check the zero offset performance of the instrument. Verification checks are only performed for those functions and ranges with unique offset calibration constants. Measurements are checked for each function and range as described in the procedure on the next page.

Zero offset verification test

1 Connect the shorting plug to the **HI** and **LO** input terminals. (see "Input connections" on page 21). Leave the current inputs open.

2 Select each function and range in the order shown in the table below. Make a measurement and observe the result. Compare measurement results to the appropriate test limits shown in the Table 1-2 below:

Table 1-2 Zero offset verification test

Step	Function[a]	Range	Quick Check	Error from Nominal 1 year
Open	DC current	100 µA		±0.015 µA
Open		1 mA		±0.07 µA
Open		10 mA	Q	±1.5 µA
Open		100 mA		±7 µA
Open		1 A		±0.15 mA
Open		10 A		±0.7 mA
Open	Capacitance	1 nF		-
Open		10 nF		±0.05 nF
Open		100 nF		±0.5 nF
Open		1 µF		±5 nF
Open		10 µF		±0.05 µF.
Open		100 µF		±0.5 µF
Open		1 mF		±5 µF
Open		10 mF		±0.05 mF
Short	DC Volts	100 mV		±8 µV
Short		1 V		±50 µV
Short		10 V	Q	±0.5 mV
Short		100 V		±5 mV
Short		1000 V		±50 mV

Table 1-2 Zero offset verification test (continued)

Step	Function[a]	Range	Quick Check	Error from Nominal 1 year
Short	Ohms	100 Ω		±8 mΩ[b]
Short		1 kΩ		±80 mΩ[b]
Short		10 kΩ		±500 mΩ[b]
Short		100 kΩ	Q	±5 Ω
Short		1 MΩ		±50 Ω
Short		10 MΩ		±500 Ω
Short		100 MΩ		±5 kΩ

[a] Select 5½ digit (slow mode) measurement resolution

[b] Specifications are for 4-W or 2-W ohms function using the Null math function enabled to eliminate lead resistance. Without Null, add 0.2 Ω additional error.

Q = Quick performance verification test points

Gain verification

This test checks the full-scale reading accuracy of the instrument. Verification checks are performed only for functions and ranges with unique gain calibration constants.

DC voltage gain verification test

1 Connect the calibrator to the front panel **HI** and **LO** input terminals as shown in the figure below:

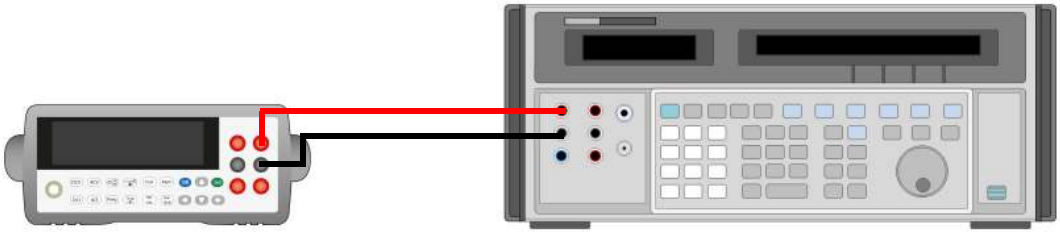

2 Select each function and range in the order shown below. Provide the input shown in the table below.

3 Make a measurement and observe the result. Compare measurement results to the appropriate test limits shown in the table. (Be certain to allow for appropriate source settling when using the Fluke 5520A.)

Table 1-3 DC voltage gain verification test

Input	Function[a]	Range	Quick Check	Error from Nominal 1 year
100 mV	DC Volts	100 mV		±26 µV
–100 mV		100 mV		±26 µV
1 V		1 V	Q	±0.2 mV
–1 V		1 V		±0.2 mV
10 V		10 V		±2 mV
100 V		100 V	Q	±20 mV
1000 V		1000 V		±0.2 V

[a] Select Slow Mode 5½ digit measurement resolution

Q = Quick performance verification test points

DC current gain verification test

1 Connect the calibrator to the front panel **HI** and **LO** input connectors as shown in the figure below:

For range ≤ 100 mA

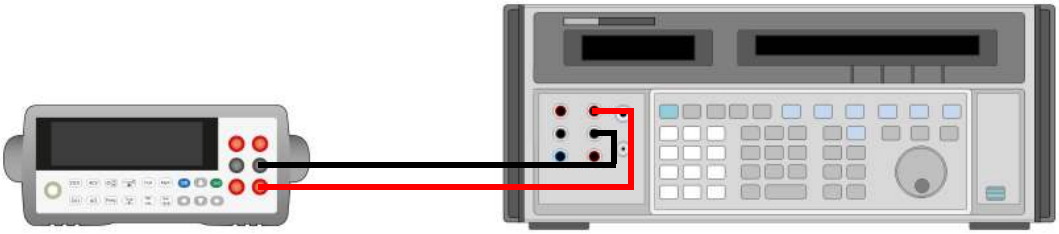

For range ≥ 1 A, Input < 3A

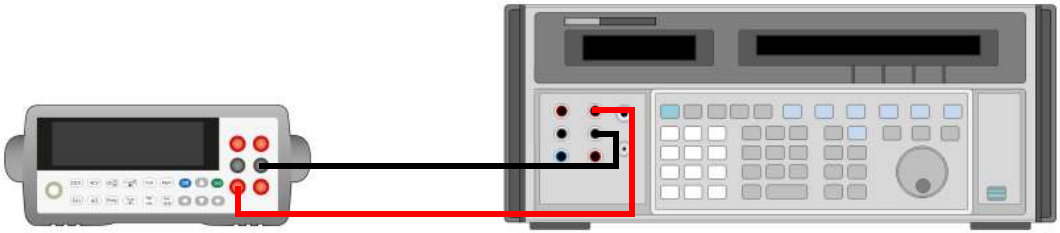

For range ≥ 1 A, Input ≥ 3A

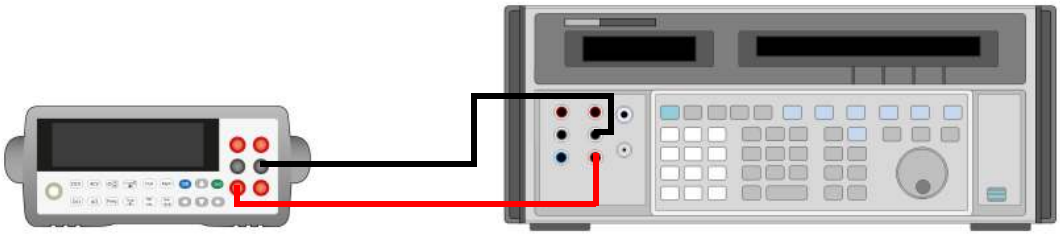

2 Select each function and range in the order shown below. Provide the input shown in the table below.

3 Make a measurement and observe the result. Compare measurement results to the appropriate test limits shown in the table. (Be certain to allow for appropriate source settling when using the Fluke 5520A.)

Table 1-4 DC current gain verification test

Input	Function[a]	Range	Quick Check	Error from Nominal 1 year
100 µA	DC current	100 µA		±65 nA
1 mA		1 mA		±0.57 µA
10 mA		10 mA	Q	±6.5 µA
100 mA		100 mA		±57 µA

Caution: Connect calibrator to multimeter's 10 A and LO terminals before applying 1 A and 10 A.

Table 1-4 DC current gain verification test (continued)

Input	Function[a]	Range	Quick Check	Error from Nominal 1 year
1 A		1 A	Q	±1.15 mA
10 A		10 A		±25.7 mA[b]

[a] Select Slow Mode 5½ digit measurement resolution.

[b] Specification apply with settling time fulfilled.

Q = Quick performance verification test points

Ohms gain verification test

Configuration: 4-W Ohms (`CONFigure:FRESistance`) or 2-W Ohms (`CONFigure:RESistance`)

1 Connect the calibrator to the front panel **HI** and **LO** input terminals as shown in the figure below:

2-W resistance with compensation (For range 100 Ω ~ 100 kΩ)

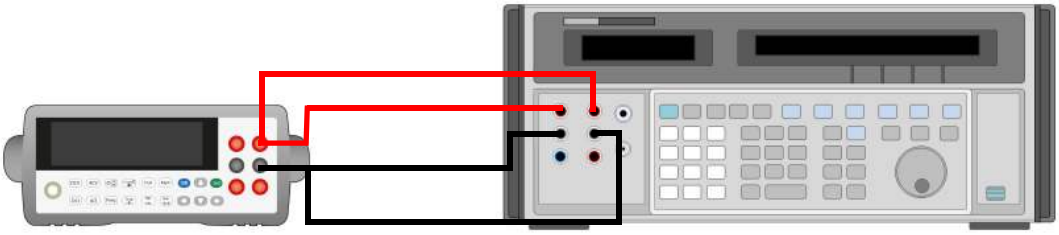

2-W resistance without compensation (For range 1 MΩ ~ 100 MΩ)

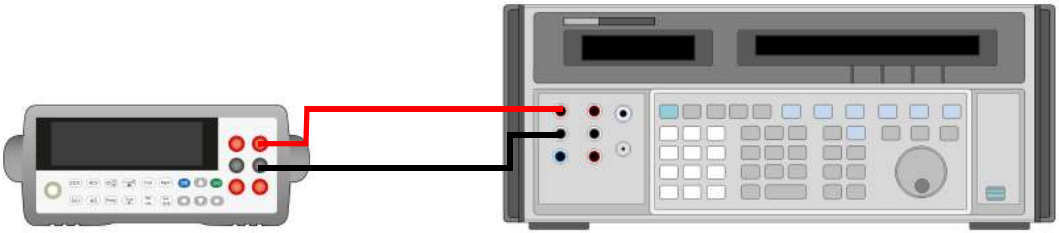

4-W resistance with compensation (For range 100 Ω ~ 100 kΩ)

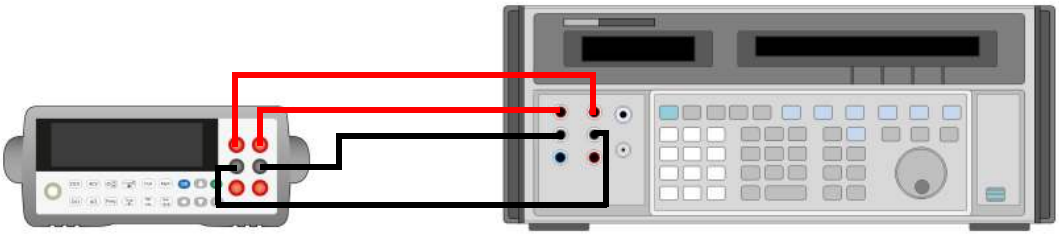

4-W resistance without compensation (For range 1 MΩ ~ 100 MΩ)

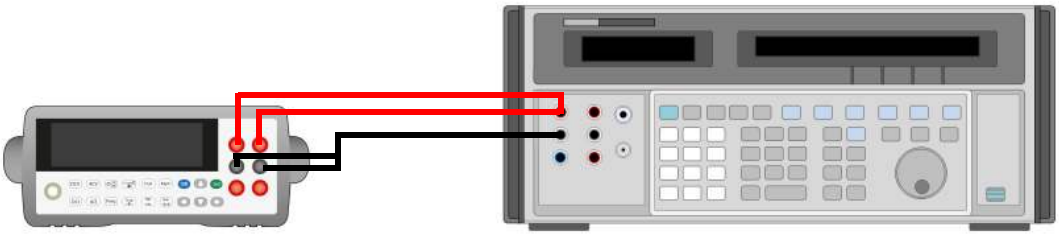

2 Select the 4-W Ohms or 2-W Ohms function.

3 Select each range in the order shown below. Provide the resistance value indicated. Compare measurement results to the appropriate test limits shown in the table. (Be certain to allow for appropriate source settling.)

Table 1-5 Ohms gain verification test

Input	Function[a]	Range	Quick Check	Error from Nominal 1 year
100 Ω	Ohms	100 Ω		±58 mΩ[b]
1 kΩ		1 kΩ	Q	±580 mΩ[b]
10 kΩ		10 kΩ		±5.5 Ω[b]
100 kΩ		100 kΩ		±55 Ω
1 MΩ		1 MΩ		±650 Ω
10 MΩ		10 MΩ	Q	±25.5 kΩ
100 MΩ		100 MΩ		±2.005 MΩ

[a] Select Slow Mode 5½ digit measurement resolution

[b] Specifications are for 4-wire for 2-wire ohms function using the Null math function enabled to eliminate lead resistance. Without Null, add 0.2Ω additional error.

Q = Quick performance verification test points

Frequency gain verification test

Configuration: Frequency (`CONFigure:FREQuency`)

1 Connect the calibrator to the front panel **HI** and **LO** input terminals as shown in the figure below:

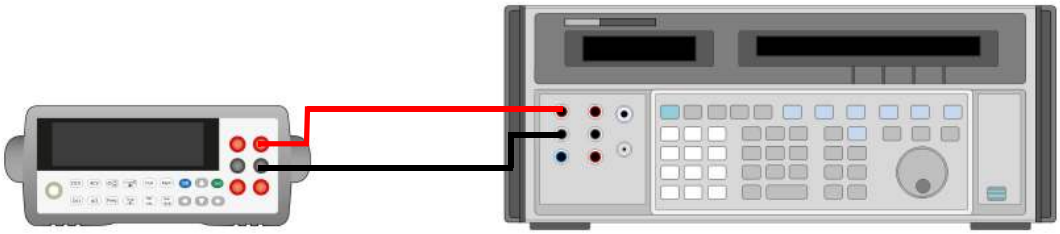

2 Select the frequency function.

3 Select each range in the order shown below. Provide the input voltage and frequency indicated. Compare measurement results to the appropriate test limits shown in the table. (Be certain to allow for appropriate source settling.)

Table 1-6 Frequency gain verification test

Voltage	Input Frequency	Function[a]	Range	Quick Check	Error from Nominal 1 year
1 Vrms	1 kHz	Frequency	1 V	Q	±0.23 Hz
0.1 Vrms	20 Hz		1 V		±0.007 Hz

[a] Select Slow Mode 5½ digit measurement resolution

Q = Quick performance verification test points

AC voltage verification test

Configuration: AC Volts (`CONFigure[:VOLTage]:AC`)

1. Connect the calibrator to the front panel **HI** and **LO** input terminals as shown in the figure below:

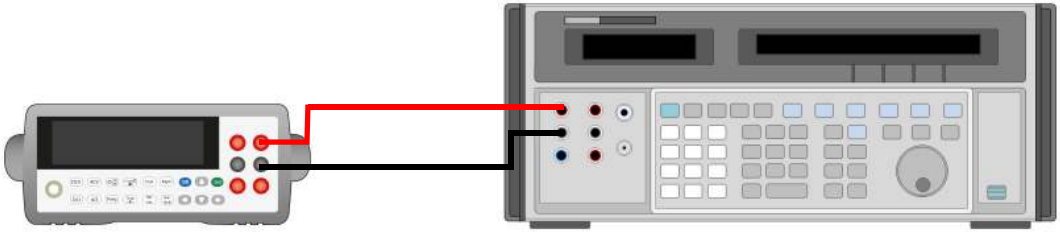

2. Select the AC voltage function.
3. Select each range in the order shown below. Provide the indicated input voltage and frequency. Compare measurement results to the appropriate test limits shown in the table. (Be certain to allow for appropriate source settling).

Table 1-7 AC volts verification test

Vrms	Input Frequency	Function[a]	Range	Quick Check	Error from Nominal 1 Year
100 mV	20 Hz	AC voltage	100 mV		±1.1 mV
100 mV	45 Hz		100 mV		±0.3 mV
100 mV	1 kHz		100 mV		±0.3 mV
100 mV	10 kHz		100 mV		±0.3 mV
100 mV	30 kHz		100 mV		±1.8 mV
100 mV	100 kHz		100 mV		±3.3 mV
1 V	20 Hz		1 V		±11 mV
1 V	45 Hz		1 V		±3 mV
1 V	1 kHz		1 V	Q	±3 mV
1 V	10 kHz		1 V		±3 mV
1 V	30 kHz		1 V		±18 mV
1 V	100 kHz		1 V		±33 mV
10 V	20 Hz		10 V		±0.11 V
10 V	45 Hz		10 V		±30 mV
10 V	1 kHz		10 V		±30 mV
10 V	10 kHz		10 V		±30 mV
10 V	30 kHz		10 V	Q	±0.18 V
10 V	100 kHz		10 V		±0.33 V
100 V	45 Hz		100 V		±0.3 V
100 V	1 kHz		100 V		±0.3 V
100 V	10 kHz		100 V	Q	±0.3 V
100 V	30 kHz		100 V		±1.8 V
100 V	100 kHz		100 V		±3.3 V
750 V	45 Hz		750 V		±2.25 V

Table 1-7 AC volts verification test (continued)

Vrms	Input Frequency	Function[a]	Range	Quick Check	Error from Nominal 1 Year
750 V	1 kHz		750 V		±2.25 V
750 V	10 kHz		750 V		±2.25 V

[a] Select Slow Mode 5½ digit measurement resolution

Q = Quick performance verification test points

AC current verification test

Configuration: AC current (`CONFigure:CURRent:AC`)

1 Connect the calibrator to the front panel **HI** and **LO** input terminals as shown in the figure below:

For range ≤ 100 mA

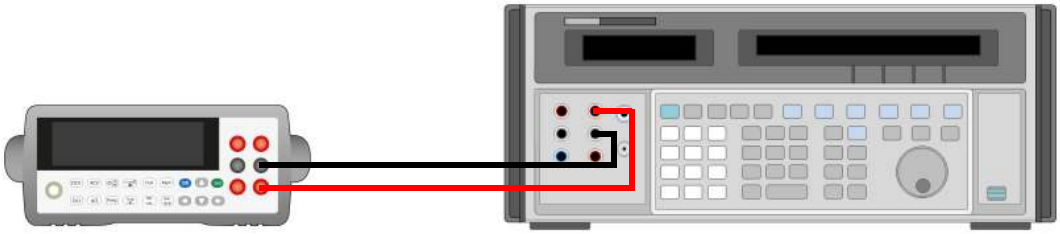

For range ≥ 1 A, Input < 3A

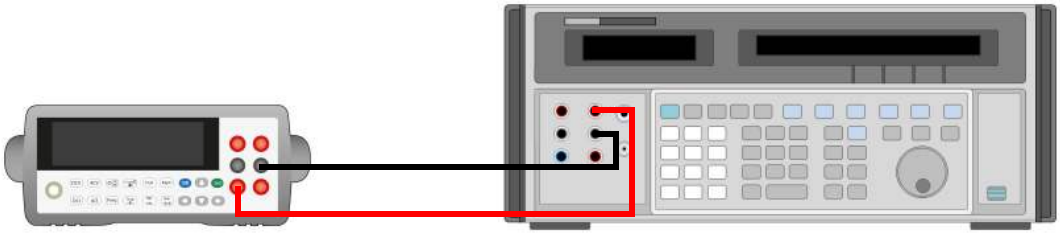

For range ≥ 1 A, Input ≥ 3A

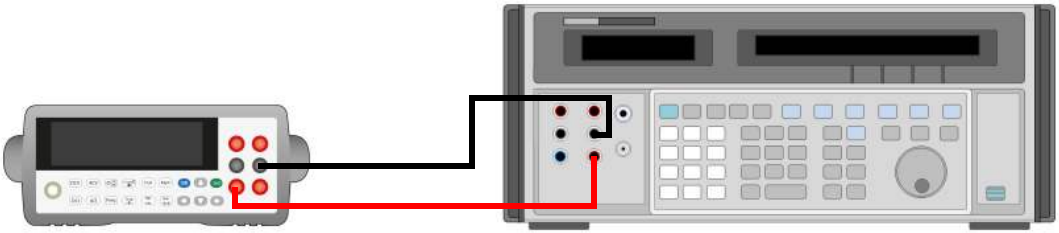

2 Select the AC current function.

3 Select each range in the order shown below. Provide the input current and frequency indicated. Compare measurement results to the appropriate test limits shown in the table. (Be certain to allow for appropriate source settling).

Table 1-8 AC current verification test

Input	Input Frequency	Function[a]	Range	Quick Check	Error from Nominal 1 year
10 mA	20 Hz	AC current	10 mA		±160 µA
10 mA	45 Hz		10 mA		±60 µA
10 mA	1 kHz		10 mA	Q	±60 µA
10 mA	5 kHz		10 mA		±220 µA
10 mA	10 kHz		10 mA		±220 µA
100 mA	20 Hz		100 mA		±1.6 mA
100 mA	45 Hz		100 mA		±600 µA
100 mA	1 kHz		100 mA		±600 µA
100 mA	5 kHz		100 mA		±2.2 mA
100 mA	10 kHz		100 mA		±2.2 mA
Caution: Connect calibrator to multimeter's 10 A and LO terminal before applying 1A and 10 A.					
1 A	20 Hz		1 A		±16 mA
1 A	45 Hz		1 A		±6 mA

Table 1-8 AC current verification test (continued)

Input	Input Frequency	Function[a]	Range	Quick Check	Error from Nominal 1 year
1 A	1 kHz		1 A		±6 mA
1 A	5 kHz		1 A		±22 mA
10 A	45 Hz		10 A		±60 mA
10 A	1 kHz		10 A		±60 mA
2 A	5 kHz		10 A		±60 mA

[a] Select Slow Mode 5½ digit measurement resolution

Q = Quick performance verification test points

Capacitance performance verification test

Configuration: Capacitance (`CONFigure:CAPacitance`)

1 Connect the calibrator to the front panel **HI** and **LO** input terminals as shown in the figure below:

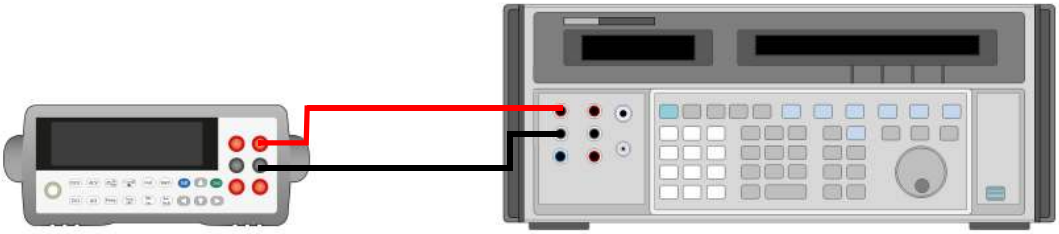

2 Select the Capacitance function.

3 Select each range in the order shown below. Provide the indicated input voltage and frequency. Compare measurement results to the appropriate test limits shown in the table. (Be certain to allow for appropriate source settling).

Table 1-9 Capacitance verification test

Input Capacitance	Range	Function[a]	Error from Nominal 1 year
1 nF	1 nF	Capacitance	-
10 nF	10 nF		± 0.15 nF
100 nF	100 nF		± 1.5 nF
1 µF	1 µF		± 15 nF
10 µF	10 µF		± 0.15 µF
100 µF	100 µF		± 1.5 µF
1 mF	1 mF		± 15 µF
10 mF	10 mF		± 0.25 mF

[a] For the best accuracy, take a zero null measurement with open test leads, to null out the test lead capacitance, before connecting the test leads to the calibrator.

Calibration Security

The calibration security code prevents accidental or unauthorized adjustments to the instrument. When you first receive your instrument, it is secured. Before you can adjust the instrument, you must unsecure it by entering the correct security code (see "Unsecuring the instrument for calibration" on page 39).

The security code is set to AT34450 when the instrument is shipped from the factory. The security code is stored in non-volatile memory, and does not change when power is turned off or after a Factory Reset (`*RST command`) or after an Instrument Preset (`SYSTem:PRESet command`).

NOTE **You can unsecure the instrument from the front panel, but you are not allowed to enter a new security code or change the security code from the front panel. The security code can only be changed from the remote interface after the instrument has been unsecured. Refer to the `CAL:SEC:CODE` command in the *34450A Programmer's Reference Help File* for more details.**

The security code may contain up to 12 alphanumeric characters. The first character must be a letter. The remaining characters can be letters or numbers. You do not have to use all 12 characters.

Unsecuring the instrument for calibration

Before you can adjust the instrument, you must unsecure it by entering the correct security code. The security code is set to AT34450 when the instrument is shipped from the factory. The security code is stored in non-volatile memory, and does not change when power has been off or after a Factory Reset (`*RST command`).

Unsecuring from the front panel

Only five characters (the third through seventh characters) of the security code are used to unsecure the instrument from the front panel. If there are letters instead of digits in any of the third through seventh characters, those letters will be represented as “0” from the front panel.

Example 1

Assume the calibration security code is the factory setting of *AT34450*. When unsecuring from the front panel, the code length is five characters and the first two characters are ignored. In our example, the code now becomes:

34450

Example 2

Assume the calibration security code was set to *AT01A405* from the remote interface. When unsecuring from the front panel, the first two characters and any characters after the eighth through twelfth character are ignored. In our example, the code now becomes:

01A40

From the front panel, any letters (*A* in this example) are represented by 0. Use this code to unsecure:

01040

Example 3

Assume the calibration security code has been set to *ATB1* through remote interface. The first two characters (AT) are ignored. The B is represented by a zero. The “1” is still used and trailing zeros fill in the remaining characters. Use this code to unsecure:

01000

To unsecure the instrument from the front panel

1 Press Shift followed by Store/Recall Utility to enter the Utility menu.

2 Use the navigator keys to move the pointer to CALIBRATION and press Shift to enter Calibration menu.

3 Press Shift to enter the security code. Use the navigator keys to step to each character in the code and to select each character.

4 Press Shift when done.

5 If the correct security code was entered, **ACCESS GRANTED** is shown and **CAL MODE** is shown at the last row.

Unsecure the instrument without the security code.

To unsecure the instrument without a correct security code, send `CAL:SEC:STAT RESET` command through the remote interface. The security code is reset to factory settings (*AT34450*). Refer to the `CAL:SEC:STAT` command in the *34450A Programmer's Reference Help File* for more details.

Calibration Process

The following general procedure is the recommended method to complete a full instrument calibration.

1. Read "Test Considerations" on page 21.
2. Perform the verification tests to characterize the instrument (incoming data).
3. Unsecure the instrument for calibration (see "Calibration Security" on page 38).
4. Perform the adjustment procedures (see "Adjustments" on page 44).
5. Secure the instrument against calibration.
6. Note the new security code and calibration count in the instrument's maintenance records.

NOTE **The new security code and calibration count in the instrument's maintenance records.**

Using the front panel for adjustments

This section describes the process used to perform adjustments from the front panel. Refer to the *34450A Programmer's Reference* online help for remote interface commands.

Selecting the Adjustment Mode

1 Press Shift > Store/Recall Utility to enter the Utility menu.

2 Select CALIBRATION and press Shift to enter Calibration menu.

3 Select CAL MODE and press Shift to enter Calibration mode. Note that CAL MODE will not exist in the menu if the instrument is secured.

Entering adjustment values

In the multimeter adjustment procedures, all calibration point has been preset. You only need to select the calibration range to start the calibration process.

Press ▲ or ▼ to select calibration range.

Press Shift to execute calibration.

Storing the calibration constants

The calibration constants are automatically stored at the end of the calibration process for each range.

Aborting a calibration in progress

Sometimes it may be necessary to abort a calibration after the procedure has already been initiated. You can abort a calibration at any time by pressing 2nd

CAUTION If you abort a calibration in progress, all calibration constants for the selected function range are lost. If power is turned off when the instrument is attempting to write new calibration constants to EEPROM, all calibration constants for the selected function range may also lost. Typically, upon re–applying power, the instrument will report Calibration Corrupt in the Questionable Data Register. Refer to the `STAT:QUES:COND?` command in the *34450A Programmer's Reference Help File* for more details. If this occurs, you should not use the instrument until a complete re–adjustment has been performed.

Adjustments

You will need a test input cable and connectors set, and a shorting plug to adjust the instrument (see "Input connections" on page 21).

NOTE **After each adjustment finishes successfully, the display briefly shows PASS at the status box. If the calibration fails, the multimeter beeps, the display shows FAIL at the status box. In the event of a calibration failure, correct the problem and repeat the procedure.**

Zero adjustment

Zero adjustments is incorporated in gain adjustments procedure for selected function.

Gain adjustments

The instrument calculates and stores gain corrections for each input value. The gain constant is computed from the calibration value entered for the calibration command and from measurements made automatically during the adjustment procedure.

Most measuring functions and ranges have gain adjustment procedures.

Adjustments for each function should be performed only in the order shown.

Gain adjustment considerations

- The zero adjustment procedure must have been recently performed prior to beginning any gain adjustment procedures.
- Be sure to allow the instrument to warm up and stabilize for four hours before performing the adjustments.
- Consider the thermal effects as you are connecting test leads to the calibrator and multimeter. It is recommended to wait one minute before starting the calibration after connecting the test leads.

CAUTION Never turn off the instrument during a gain adjustment. This may cause calibration memory for the present function to be lost.

Valid gain and frequency compensation input values.

Gain adjustment can be accomplished using the preset calibration points.

Table 1-10 Valid gain and frequency compensation input values

Function	Range	Valid Amplitude Input Values
DC voltage	1 V 100 mV, 10 V, 100 V, 1000 V	(0, ±0.2, ±0.4, ±0.6, ±0.8, ±1, ±1.2) x Full Scale ±1 x Full Scale
DC current	100 µA 1 mA, 10 mA, 100 mA, 1 A, 10 A	(0, ±0.2, ±0.7, ±1) x Full Scale (±0.2, ± 0.7, ± 1) x Full Scale
2-W/4-W Resistance	100 Ω, 1 kΩ, 10 kΩ, 100 kΩ, 1MΩ, 10 MΩ 100 MΩ	(0, 0.2, 0.7, 1) x Full Scale (0.2, 0.7, 1) x Full Scale 100 MΩ and open
AC voltage	100 mV, 1 V, 10 V, 100 V, 750 V	(0.1, 0.7, 1) x Full Scale, 1 kHz, 1 x Full Scale, 1 kHz, 10 kHz (75 V, 200 V, 750 V), 1 kHz, 200 V, 1 kHz, 10 kHz
AC current	10 mA, 100 mA, 1 A, 10 A	(0.1, 0.7, 1) x Full Scale, 1 kHz
Capacitance	1 nF 10 nF, 100 nF, 1 µF, 10 µF, 100 µF, 1 mF, 10 mF	(0.4, 1) x Full Scale and Open (0.1, 1) x Full Scale
Frequency	1 V, 1 kHz	1 V_{rms}, 1 kHz

DC voltage gain adjustment procedure

Review the "Test Considerations" on page 21 and "Gain adjustment considerations" on page 44 sections before beginning this procedure.

Calibration mode: DC voltage

1 Apply the input signal shown in the Calibration Point box.

2 Press Shift to start the adjustment. The Status box displays **CALIBRATING** indicates the calibration is in progress.
   - Successful completion of each adjustment value is indicated by a message in the Status box showing **PASS**.
   - An adjustment failure is indicated by a message in the Status box showing **FAIL**. Check the input value, range, function, and entered adjustment value to correct the problem and repeat the adjustment step.

3 Repeat steps 1 through 2 for each gain adjustment point shown in the preset Calibration Point box, Table 1-11 below.

4 When the calibration has been completed for the selected range, the status box shows **DONE**, and the value in the Calibration Range box flashes.

5 Increase the range and continue the calibration by repeating steps 1 through 4.

6 Verify the DC voltage gain adjustments using the "DC voltage gain verification test" on page 26.

Table 1-11 DC voltage gain adjustment

Input	Function	Range
0 mV[a]	DC voltage	1 V
0.2 V, 0.4 V, 0.6 V, 0.8 V, 1 V, 1.2 V, –0.2 V, –0.4 V, –0.6 V, –0.8 V, –1V, –1.2 V[b]		1 V
100 mV, –100 mV		100 mV
10 V, –10 V		10 V
100 V, –100 V		100 V
1000 V, –1000 V		1000 V
Caution: Set the calibrator output to 0 V before disconnecting from the multimeter input terminals.		

[a] Cal Item 0 mV only calibrated once during DC voltage gain adjustment procedure. You need to re-calibrate once you exit calibration mode.

[b] Calibration need to be done on 1 V range first before proceeds to other ranges.

DC current gain adjustments procedure

Review the "Test Considerations" on page 21 and "Gain adjustment considerations" on page 44 sections before beginning this procedure.

Calibration mode: DC current

1. Press ▲ or ▼ to select the calibration range.
2. The Measurement box displays the uncalibrated value and the Calibration Point box displays the reference value.
3. Apply the input signal shown in the Calibration Point box, Table 1-12 below.
4. Press Shift to start the adjustment. The Status box displays **CALIBRATING** indicates the calibration is in progress.
   - Successful completion of each adjustment value is indicated by a message in the Status box showing **PASS**.
   - An adjustment failure is indicated by a message in the Status box showing **FAIL**. Check the input value, range, function, and entered adjustment value to correct the problem and repeat the adjustment step.
5. Repeat steps 1 through 4 for each gain adjustment point shown in the preset Calibration Point box.
6. When the calibration has been completed for the selected range, the status box shows **DONE**, and the value in the Calibration Range box flashes.
7. Increase the range and continue the calibration by repeating steps 1 through 4.
8. Verify the DC current gain adjustments using the "DC current gain verification test" on page 27.

Table 1-12 DC current gain adjustment

Input	Function	Range
Input terminals open[a]	DC current	Any
20 µA, 70 µA, 100 µA, –20 µA, –70 µA, –100 µA		100 µA
0.2 mA, 0.7 mA, 1 mA, –0.2 mA, –0.7 mA, –1 mA		1 mA
2 mA, 7 mA, 10 mA, –2 mA, –7 mA, –10 mA		10 mA

Table 1-12 DC current gain adjustment (continued)

Input	Function	Range
20 mA, 70 mA, 100 mA, –20 mA, –70 mA, –100 mA		100 mA
Caution: Connect calibrator to multimeter's 10 A and LO terminals before applying 1 A and 10 A range.		
0.2 A, 0.7 A, 1 A, –0.2 A, –0.7 A, –1 A		1 A
2 A, 7 A, 10 A, –2 A, –7 A, –10 A		10 A [b]

[a] Cal Item **OPEN** only calibrated once during DC current gain adjustment procedure. You need to re-calibrate once you exit calibration mode.

[b] Comply to settling time requirement before proceeding to step 4.

NOTE Before initiating any gain adjustment procedures, perform the zero adjustment at any range first.

AC voltage gain adjustment procedure

Review the "Test Considerations" on page 21 and "Gain adjustment considerations" on page 44 on page sections before performing this procedure.

DC offset calibration and AC voltage flatness calibration has to be done prior to performing the AC voltage gain adjustments procedure.

Calibration mode: AC voltage

1. Press ▲ or ▼ to select the calibration range.
2. The Calibration Point box displays the first reference value (SHORT).
3. Configure each calibration point as shown in the adjustment Table 1-13 on page 49.
4. Press Shift to start the adjustment. The Status box displays **CALIBRATING** indicates the calibration is in progress.
   - Successful completion of each adjustment value is indicated by a message in the Status box showing **PASS**.
   - An adjustment failure is indicated by a message in the Status box showing **FAIL**. Check the input value, range, function, and entered adjustment value to correct the problem and repeat the adjustment step.

5 Repeat step 1 through 4 for each gain adjustment point shown in the preset calibration point box.

6 When the calibration has been completed for the selected range, the status box shows **DONE**, and the value in the Calibration Range box flashes.

7 Increase the range and continue the calibration by repeating steps 1 through 4.

8 Verify the AC voltage gain adjustments using the "AC voltage verification test" on page 32.

Table 1-13 AC voltage gain adjustment

Input		Instrument Settings		
Vrms	**Frequency**	**Function**	**Range**	**Cal Item**
Shorting plugs between 2 terminals		AC voltage	Any	DC Offset
1 × Full Scale 200 V	1 kHz 1 kHz		100 mV to 100 V 750 V	FLATNESS 1 kHz[a]
1 × Full Scale 200 V	10 kHz 10 kHz		100 mV to 100 V 750 V	FLATNESS 10 kHz
10 mV, 70 mV, 100 mV	1kHz		100 mV	
0.1 V, 0.7 V, 1 V	1kHz		1 V	
1 V, 7 V, 10 V	1kHz		10 V	
10 V, 70 V, 100 V	1kHz		100 V	
75 V, 200 V, 750 V	1kHz		750 V	
Caution: Set the calibrator output to 0 V before disconnecting from the multimeter input terminals.				

[a] AC voltage flatness calibration for 1 kHz and 10 kHz need to completed for one range (example 100 mV) first before proceeding to another range (example 1 V).

AC current gain adjustment procedure

Review the "Test Considerations" on page 21 and "Gain adjustment considerations" on page 44 sections before beginning this procedure.

AC voltage gain adjustment for 100 mV range calibration has to be done prior to performing the AC current gain adjustments procedure.

Calibration Mode: AC current

1. Press ▲ or ▼ to select the calibration range.
2. The Measurement box displays the uncalibrated value and the Calibration Point box displays the reference value.
3. Apply the input signal shown in the Calibration Point Box.
4. Press Shift to start the adjustment. The Status box displays **CALIBRATING** indicates the calibration is in progress.
   - Successful completion of each adjustment value is indicated by a message in the Status box showing **PASS**.
   - An adjustment failure is indicated by a message in the Status box showing **FAIL**. Check the input value, range, function, and entered adjustment value to correct the problem and repeat the adjustment step.
5. Repeat step 1 through 4 for each gain adjustment point shown in the preset calibration point box.
6. When the calibration has been completed for the selected range, the status box shows **DONE**, and the value in the Calibration Range box flashes.
7. Increase the range and continue the calibration by repeating steps 1 through 4.
8. Verify the AC current gain adjustments using the "AC current verification test" on page 34.

Table 1-14 AC current gain adjustment

Input		Instrument Settings	
Current, rms	**Frequency**	**Function**	**Range**
1 mA, 7 mA, 10 mA	1 kHz	AC current	10 mA
10 mA, 70 mA, 100 mA	1 kHz		100 mA
Caution: Connect calibrator to multimeter's 10 A and LO terminals before applying 1A and 10 A range.			
0.1 A, 0.7 A, 1 A	1 kHz		1 A
1 A, 7 A, 10 A	1 kHz		10 A

Ohms gain adjustment procedure

Review the "Test Considerations" on page 21 and "Gain adjustment considerations" on page 44 sections before performing this procedure.

This procedure applies to both 2-W Resistance and 4-W Resistance calibration mode.

Calibration Mode: 2-W Resistance/4-W Resistance

1. Press ▲ or ▼ to select the calibration range.
2. The Measurement box displays the uncalibrated value and the Calibration Point box displays the reference value.
3. Apply the input signal shown in the Calibration Point Box.
4. Press Shift to start the adjustment. The Status box displays **CALIBRATING** indicates the calibration is in progress.
   - Successful completion of each adjustment value is indicated by a message in the Status box showing **PASS**.
   - An adjustment failure is indicated by a message in the Status box briefly showing **FAIL**. Check the input value, range, function, and entered adjustment value to correct the problem and repeat the adjustment step.
5. Repeat step 1 through 4 for each gain adjustment point shown in the preset calibration point box.

6 When the calibration has been completed for the selected range, the status box shows **DONE**, and the value in the Calibration Range box flashes.

7 Verify the Ohms gain adjustments using the "Ohms gain verification test" on page 29.

Table 1-15 Ohms gain adjustment

Input	Function	Range
0 Ω[a]	2-W Resistance/4-W Resistance	Any
20 Ω, 70 Ω, 100 Ω		100 Ω
0.2 kΩ, 0.7 kΩ, 1 kΩ		1k Ω
2 kΩ, 7 kΩ, 10 kΩ		10 kΩ
20 kΩ, 70 kΩ, 100 kΩ		100 kΩ
0.2 MΩ, 0.7 MΩ, 1 MΩ		1 MΩ
2 MΩ, 7 MΩ, 10 MΩ		10 MΩ
100 MΩ		100 MΩ
Input terminal open[b]	2-W Resistance(only)	100 MΩ
Do not remove test lead[c]	2-W Resistance(only)	100 MΩ

[a] Configure to 2-wire compensation mode for calibrator for better accuracy. Cal item 0 Ω only calibrated once during ohms gain adjustment procedure. You need to re-calibrate once you exit calibration mode.

[b] Remove test lead for 2-wire calibration.

[c] Do not remove kelvin 4-wire connection at the other end of the test leads (for DUT measurement) for 4-W resistance calibration.

NOTE Before initiating any gain adjustment procedures, perform the zero adjustment at any range first.

Capacitance gain adjustment procedure

Review the "Test Considerations" on page 21 and "Gain adjustment considerations" on page 44 sections before beginning this procedure.

Calibration Mode: Capacitance

1. Apply the input signal shown in the Calibration Point Box.
2. Press Shift to start the adjustment. The Status box displays **CALIBRATING** indicates the calibration is in progress.
   - Successful completion of each adjustment value is indicated by a message in the Status box showing **PASS**.
   - An adjustment failure is indicated by a message in the Status box briefly showing **FAIL**. Check the input value, range, function, and entered adjustment value to correct the problem and repeat the adjustment step.
3. Repeat step 1 through 4 for each gain adjustment point shown in the preset calibration point box.
4. Verify the Capacitance gain adjustments using the "Capacitance performance verification test" on page 37.

Table 1-16 Capacitance gain adjustment

Input	Function	Range
1 mF, 10 mF	Capacitance	10 mF
0.1 mF, 1 mF		1 mF
10 µF, 100 µF		100 µF
1 µF, 10 µF		10 µF
0.1 µF, 1 µF		1 µF
10 nF, 100 nF		100 nF
1 nF, 10 nF		10 nF
0.4 nF, 1 nF		1 nF
Input terminal open (remove any test leads or shorting plugs from the input terminals)		Any

Frequency gain adjustment procedure

Review the "Test Considerations" on page 21 and "Gain adjustment considerations" on page 44 sections before beginning this procedure.

Calibration Mode: Frequency

1. Apply the input signal shown in the Calibration Point Box.
2. Press Shift to start the adjustment. The Status box displays **CALIBRATING** indicates the calibration is in progress.
   - Successful completion of each adjustment value is indicated by a message in the Status box showing **PASS**.
   - An adjustment failure is indicated by a message in the Status box briefly showing **FAIL**. Check the input value, range, function, and entered adjustment value to correct the problem and repeat the adjustment step.
3. Verify the Frequency gain adjustments using the "Frequency gain verification test" on page 31.

Table 1-17 Frequency gain adjustment

Input	Frequency	Function	Range
1 V_{rms}	1 kHz	Frequency	1 V, 1 kHz

Finishing the adjustments

1. Remove all shorting plugs and connections from the instrument.
2. Reset the Calibration Message (see Calibration Message).
3. Record the new Calibration Count (see To read the calibration count).
4. Press 2nd to exit the Calibration Mode.
5. Reset the "Calibration Security" on page 38.

Calibration Message

The instrument allows you to store a message in calibration memory. For example, you can store such information as the date when the last calibration was performed, the date when the next calibration is due, the instrument's serial number, or even the name and phone number of the person to contact for a new calibration. The calibration message may contain up to 40 characters.

You can record a calibration message only when the instrument is unsecured. You can read the calibration message whether the instrument is secured or unsecured.

To store a calibration message use the `CALibration:STRing` command and to read the calibration message, use the `CALibration:STRing?` command from the remote interface.

To read the calibration count

You can query the instrument to determine how many calibrations have been performed. Note that your instrument was calibrated before it left the factory. When you receive your instrument, read the count to determine its initial value.

The count value increments by one for each calibration point, and a complete calibration will increase the value by many counts. The calibration count increments up to a maximum of 2^{32}-1 after which it rolls over to 0. The calibration count can be read either remotely or from the front panel. To read the calibration count from remote, use the `CALibration:COUNt?` command. Use the following procedure to read the calibration count from the front panel.

1 In the Utility menu/Calibration mode, display will show the calibration count.

Calibration Errors

The following errors indicate failures that may occur during a calibration.

Table 2 Calibration errors

Error	Meaning
702	Calibration secured
703	Invalid secure code
704	Secure code too long
708	Unable to store calibration data
709	No calibration for this function
720	DCV calibration failed
721	DCI calibration failed
722	RES calibration failed
723	CAP calibration failed
724	FRES calibration failed
725	FREQ calibration failed
726	ACV calibration failed
727	ACI calibration failed
732	ACV flatness calibration failed

2 Disassembly and Repair

Operating Checklist 58
Types of Services Available 59
Repackaging for Shipment 60
Cleaning 60
To Replace the Power Line Fuse 61
To Replace a Current Input Fuse 62
To Verify your Device License 63
Self Test Errors 64
Electrostatic Discharge (ESD) Precautions 65
Mechanical Disassembly 66
Replaceable Parts 73
Rack Mounting 75

This chapter will help you troubleshoot a failing multimeter. It describes how to disassemble the multimeter, how to obtain repair services, and lists replaceable parts.

Operating Checklist

Before returning your multimeter to Keysight for service or repair check the following items:

Is the multimeter inoperative?

✔ Verify the power line voltage setting.

✔ Verify the power line fuse is installed.

✔ Verify that the power cord is connected to the multimeter and to AC line power.

✔ Verify the front panel power switch is depressed.

Does the multimeter fail self–test?

✔ Remove all test connections to the multimeter and run the self–test again.

Errors may be induced by AC signals present on the multimeter input terminals during self–test. Long test leads can act as an antenna causing pick–up of AC signals.

Is the mutimeter's current input inoperative?

✔ Verify the current input fuse.

Types of Services Available

If your instrument fails during the warranty period, Keysight Technologies will repair or replace it under the terms of your warranty. After your warranty expires, Keysight offers repair services at competitive prices.

Extended service contracts

Many Keysight products are available with optional service contracts that extend the *covered period* after the standard warranty expires. If you have such a service contract and your instrument fails during the covered period, Keysight Technologies will repair or replace it in accordance with the contract.

Obtaining repair service (Worldwide)

To obtain service for your instrument (in–warranty, under service contract, or post–warranty), contact your nearest Keysight Technologies Service Center. They will arrange to have your unit repaired or replaced, and can provide warranty or repair–cost information where applicable.

To obtain warranty, service, or technical support information you can contact Keysight Technologies at one of the following telephone numbers:

In the United States: (800) 829–4444

In Europe: 31 20 547 2111

In Japan: 0120–421–345

Or use our Web link for information on contacting Keysight worldwide:

www.keysight.com/find/assist

Or contact your Keysight Technologies representative.

Before shipping your instrument, ask the Keysight Technologies Service Center to provide shipping instructions, including what components to ship. Keysight recommends that you retain the original shipping carton for use in such shipments.

Repackaging for Shipment

If the unit is to be shipped to Keysight for service or repair, be sure to:

- Attach a tag to the unit identifying the owner and indicating the required service or repair. Include the model number and full serial number.
- Place the unit in its original container with appropriate packaging material for shipping.
- Secure the container with strong tape or metal bands.
- If the original shipping container is not available, place your unit in a container which will ensure at least 4 inches of compressible packaging material around all sides for the instrument. Use static-free packaging materials to avoid additional damage to your unit.

Keysight suggests that you always insure shipments.

Cleaning

Clean the outside of the instrument with a soft, lint-free, slightly dampened cloth. Do not use detergent. Disassembly is not required or recommended for cleaning.

To Replace the Power Line Fuse

The power line fuse is located within the multimeter's fuse-holder assembly on the rear panel. The multimeter is shipped from the factory with a power-line fuse installed. The supplied fuse is a time-delay, 0.25 A 250 V Time-delay 1.9 Ohm 20.5×5.2×5.2mm glass-tube fuse, Keysight part number 2110-1533. If you have determined that the fuse is faulty, replace it with one of the same size and rating.

1 Disconnect power cord. Depress tabs 1 and 2 and pull fuse holder from rear panel.

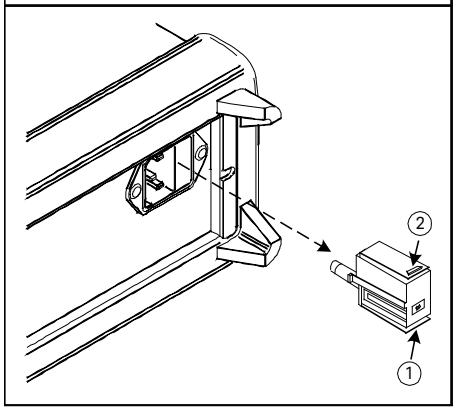

2 Remove the line voltage selector from fuse holder assembly.

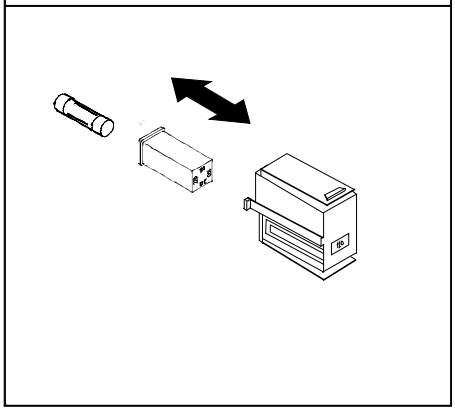

3 Rotate line voltage selector and reinstall so correct voltage appears in fuse holder window.

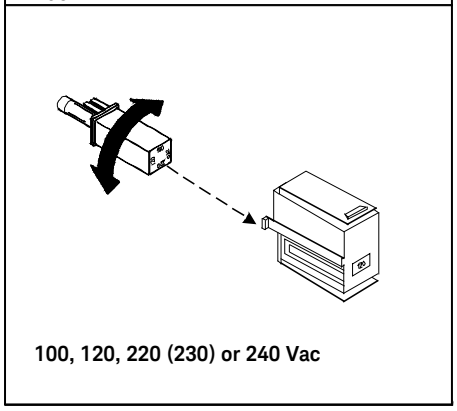

4 Replace fuse holder assembly in rear panel.

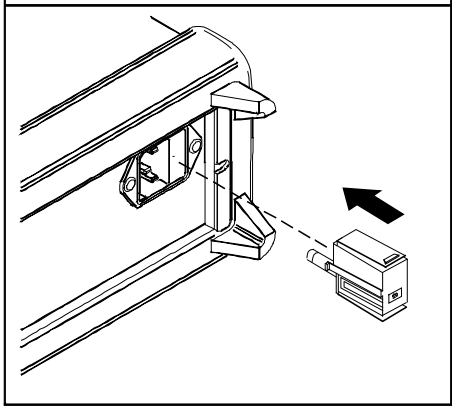

To Replace a Current Input Fuse

Both the 100 mA and the 10 A current input terminals are fuse protected. The fuse for the 100 mA input terminal is located on the rear panel (refer to *Keysight 34450A User's Guide, Chapter 1*). The fuse is a 0.4 A 500 V/1000 V fast acting 32×6.3×6.3 mm fuse, Keysight part number 2110-1503/2110-1880. If you have determined that the fuse is faulty, replace it with one of the same size, and the fuse rating must be 0.4 A 500 V/1000 V.

The fuse for the 10 A current input terminal is located inside the multimeter and requires partial disassembly of the multimeter. The fuse is a 11 A fuse, Keysight part number 2110-1402. If you have determined that the fuse is faulty, replace it with one of the same size and rating.

To Verify your Device License

1 Go to page 2 of the Utility Menu as shown below :

2 If you have purchased the GPIB option, the GPIB Option displays **ON.**

3 If you have purchased the 50 k memory option, the 50 k Memory option displays **ON**.

4 If you have not purchased any option, the GPIB Option and 50K Memory display **OFF.**

Self Test Errors

The 34450A self test (see the `*TST?` command) performs a series of tests on the instrument hardware. Any failure of these tests will generate a SCPI error number -330, with additional test failure information. Refer to the *Keysight 34450A Programmer's Helpfile* for more information.

NOTE **On the remote interface, a self–test failure will generate SCPI error –330 and a supplemental message indicating one of the test numbers shown below. On the front panel, only the failing test is shown.**

The form of this error message is as follows:

-330,"self test failed; <test# - testname>"

Where test# is the number of the test that failed (range 600 - 607) and testname describes the test. Here is an example of a test failure message:

-330,"self test failed; 602 – M/B flash failed"

The following is the list of test numbers and descriptions:

Table 2-1 Self test error numbers

Error Number	Description
600	I/O processor failed self test
601	M/B EEPROM failed
602	M/B flash failed
603	M/B ASIC failed
604	DC low path zero test failed
605	DC high path zero test failed
606	AC path zero test failed
607	GPIB board failed

Electrostatic Discharge (ESD) Precautions

Almost all electrical components can be damaged by electrostatic discharge (ESD) during handling. Component damage can occur at electrostatic discharge voltages as low as 50 V.

The following guidelines will help prevent ESD damage when servicing the instrument or any electronic device.

- Disassemble instruments only in a static-free work area.
- Use a conductive work area to reduce static charges.
- Use a conductive wrist strap to reduce static charge accumulation.
- Minimize handling.
- Keep replacement parts in original static-free packaging.
- Remove all plastic, foam, vinyl, paper, and other static-generating materials from the immediate work area.

Use only anti-static solder suckers.

Mechanical Disassembly

For procedures in this manual, the following tools are required for disassembly:

– T20 Torx driver (most disassembly)

WARNING **SHOCK HAZARD. Only service–trained personnel who are aware of the hazards involved should remove the instrument covers. To avoid electrical shock and personal injury, make sure to disconnect the power cord from the instrument before removing the covers. Some circuits are active and have power applied even when the power switch is turned off.**

General disassembly

1 Remove power and all cables from the instrument.

2 Remove the carrying handle by rotating the handle upright and pulling out from the sides of the instrument.

3 Remove the instrument bumpers. Pull from a corner and stretch the bumpers off the instrument.

4 Remove the rear bezel. Loosen the two captive screws in the rear bezel and remove the rear bezel.

For Serial Number MY65080025 and below

For Serial Number MY65100001 and above

5 **Remove the cover.** Remove the screw in the bottom of the cover and slide the cover off the instrument.

For Serial Number MY65080025 and below

For Serial Number MY65100001 and above

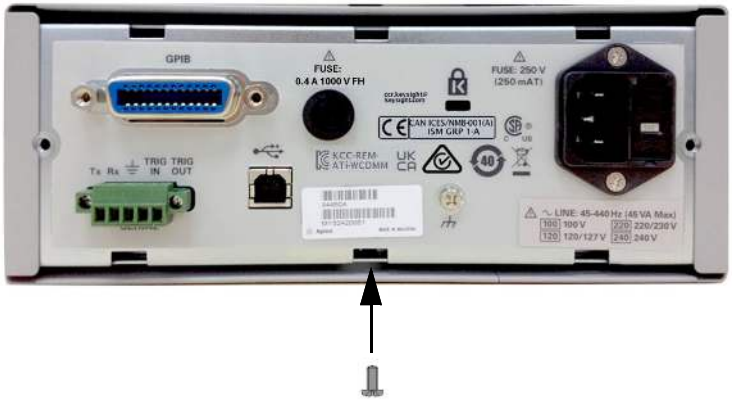

Front panel removal

6 Remove the two screws holding the front panel.

7 Disconnect the ribbon cable connectors from the front panel.

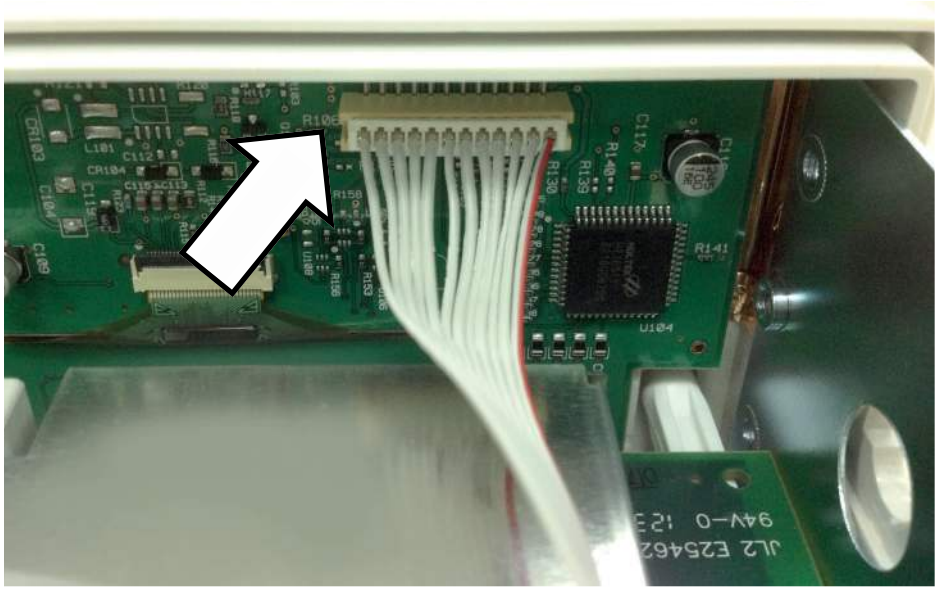

8 Disconnect the individual front panel wires as shown in the figure below:

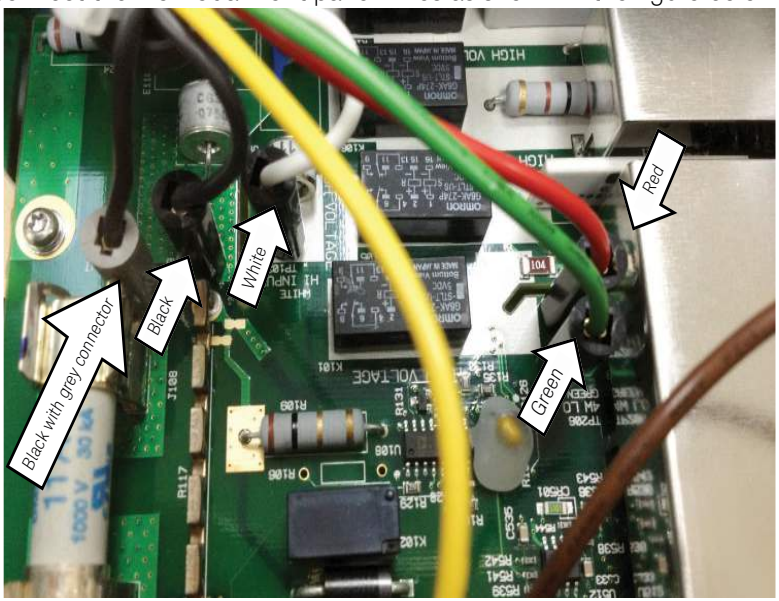

9 Disconnect the fuse wire as shown in the figure below:

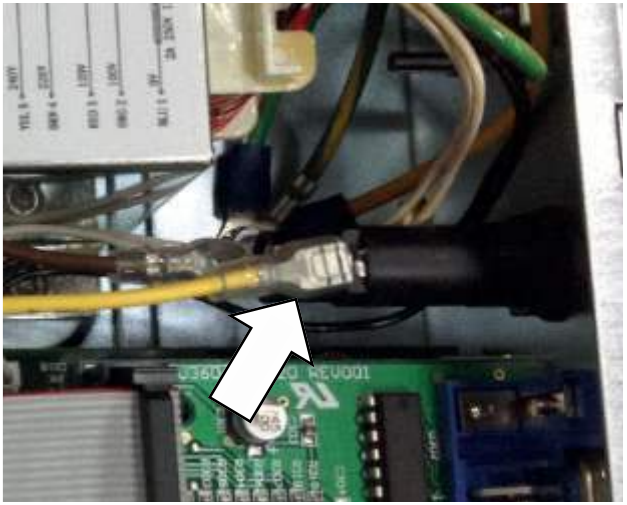

10 There is now enough space to allow the side of the front panel to be pried from the chassis and removed as an assembly.

Front panel

1 **Remove the keyboard and display assembly.** Remove the screw from the circuit board gently to disengage from the tabs. Lift the keyboard and display assembly from the plastic housing.

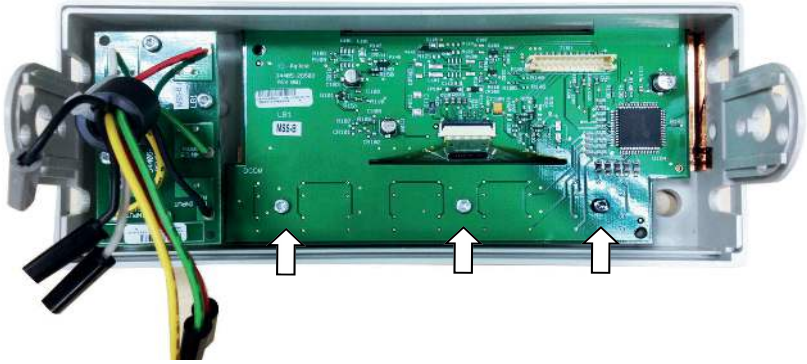

2 Pull the rubber keypad from the plastic housing.

Replaceable Parts

This section contains information for ordering replaceable parts for your 34450A. Table 2-2 on page 74 includes a brief description of each replaceable part with its corresponding part number.

NOTE **You can find the latest 34450A support parts list at Keysight Test & Measurement Parts Catalog: http://www.keysight.com/find/parts.**

To order replaceable parts

You can order replaceable parts from Keysight using the part numbers as listed in Table 2-2 on page 74.

NOTE **Not all parts listed are available as field-replaceable parts.**

To order replaceable parts from Keysight, do the following:

1. Contact your nearest Keysight Sales Office or Service Center.
2. Identify the parts by the Keysight part number shown in the replaceable parts list.
3. Provide the instrument model number and serial number.

Table 2-2 Replaceable parts list

Part Number	Description
34405-30202	Front Panel Assembly
34450-60206	Front Panel
34405-38302	Keypad
34405-43711	Push Rod
34405-40001	Fuse Drawer
A02-62-25604-1	Fuse Carrier
2110-1402	Fuse, Fast acting, 11.0 A, 1000.0 V
2110-1503	Fuse 0.4 A, 500 V Fast Acting 32 × 6.3 × 6.3 mm
2110-1880	Fuse 0.4 A, 1000 V Fast Acting 32 × 6.3 × 6.3 mm
2110-1533	Fuse 0.25 A 250 V Time-delay 1.9 Ohm 20.5 × 5.2 × 5.2 mm glass-tube

Rack Mounting

You can mount the multimeter in a standard 19-inch rack cabinet using one of three optional kits shown below. Instructions and mounting hardware are included with each rack-mounting kit. Any Keysight Technologies instrument of the same size can be rack-mounted beside the 34450A 5½ Digit Multimeter.

NOTE **You must remove the carrying handle (see page 66) and the front and rear bumpers (see page 67) before rack mounting the multimeter.**

To rack mount a single instrument, order rackmount kit 34190A.

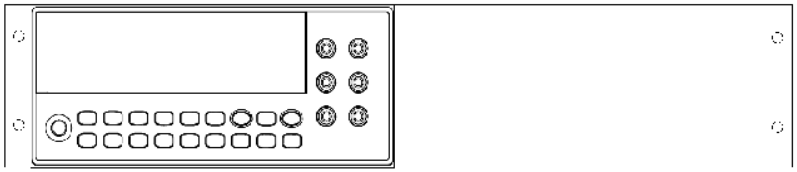

To rack mount two instruments side-by-side, order dual lock-link kit 34194A and dual flange kit 34191A.

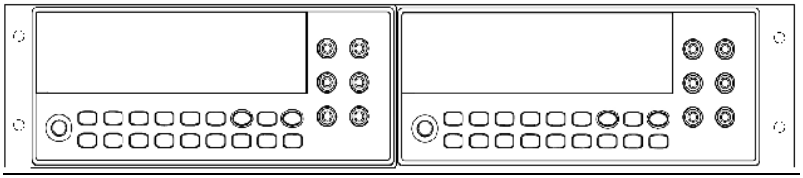

This information is subject to change without notice. Always refer to the Keysight website for the latest revision.

© Keysight Technologies 2012-2025
Edition 9, March 2025

Printed in Malaysia

34450-90029

www.keysight.com